Atrio 20 073

Wall Mount Vessel Faucet

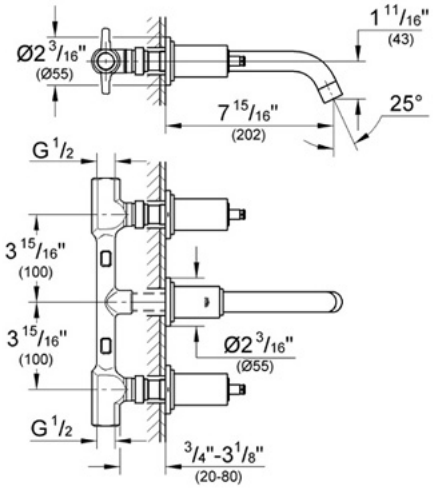

Description

-DISCONTINUED PRODUCT-
See Product# 20 138

Flow Rate

2.2 gpm at 60 psi,
2.5 gpm at 80 psi

Code Compliance

* ASME/ANSI A112.18.1M
* ANSI/NSF Standard 61
* ADA Compliant

Finish Options

20 073 OOO Chrome
20 073 AVO Infinity Satin Nickel
20 073 BEO Sterling Infinity Finish

GROHE AMERICA, INC 241 COVINGTON DRIVE, BLOOMINGDALE, IL 60108 . 630-582-7711.FAX:630-582-7722