SHOW HOUSE by MOEN

Replacement Parts

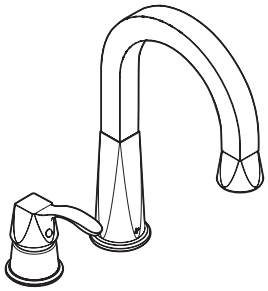

Divine™

Single Handle Pull Down Prep Bar Faucet

Models: S658 Chrome
S658SL Stainless

Order by Part Number

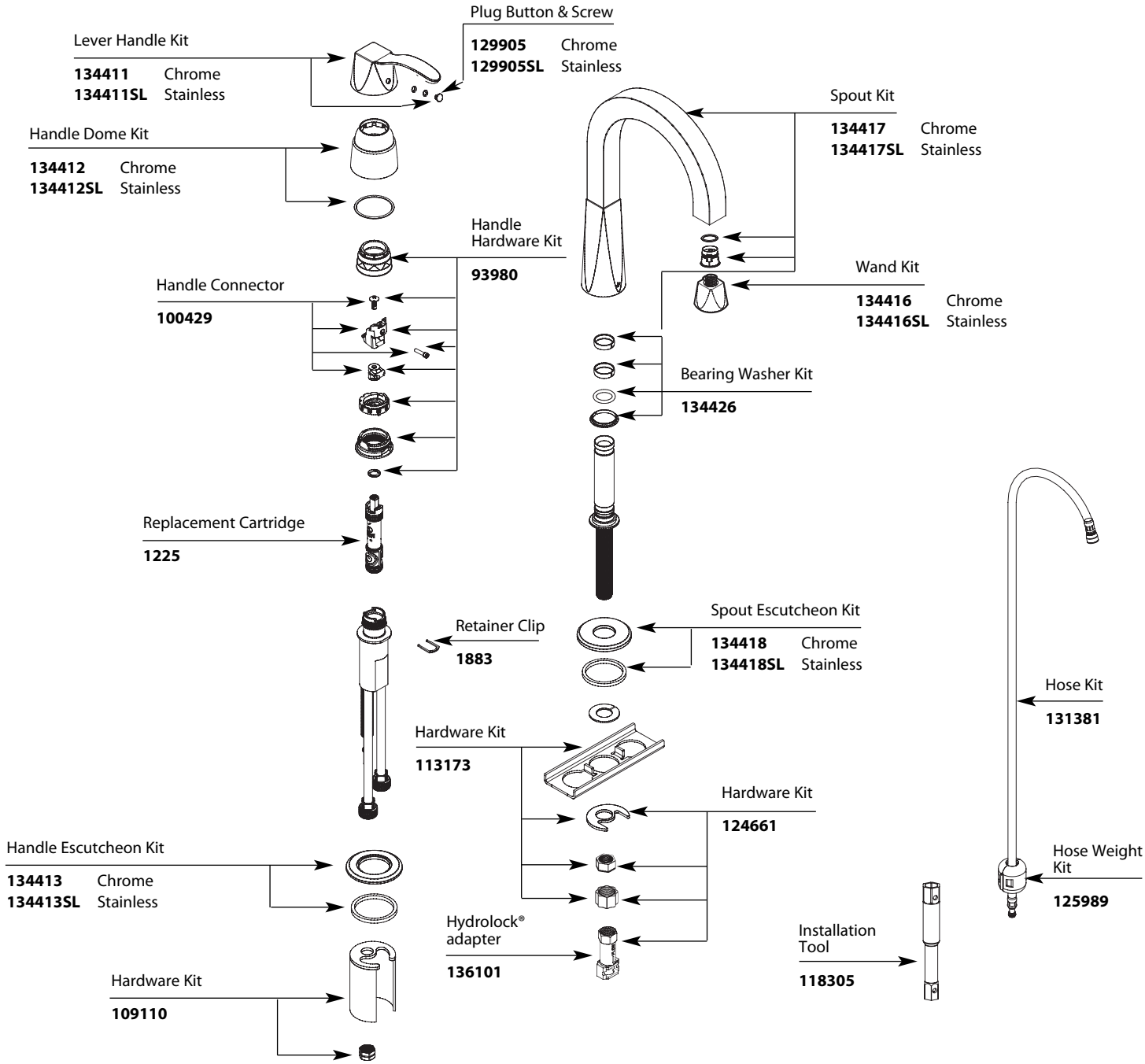

TO ORDER PARTS CALL: 1-800-BUY-MOEN
www.moen.com