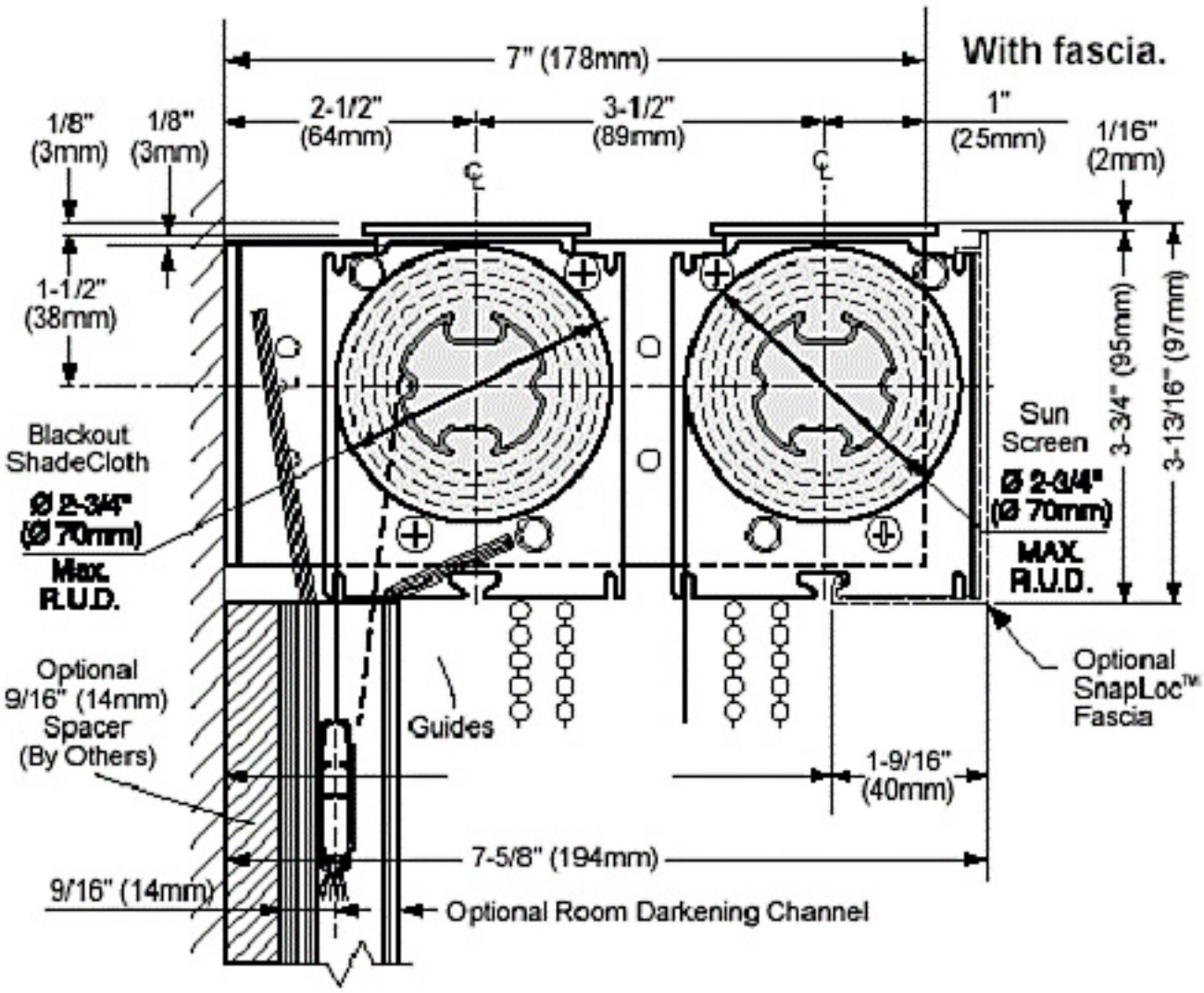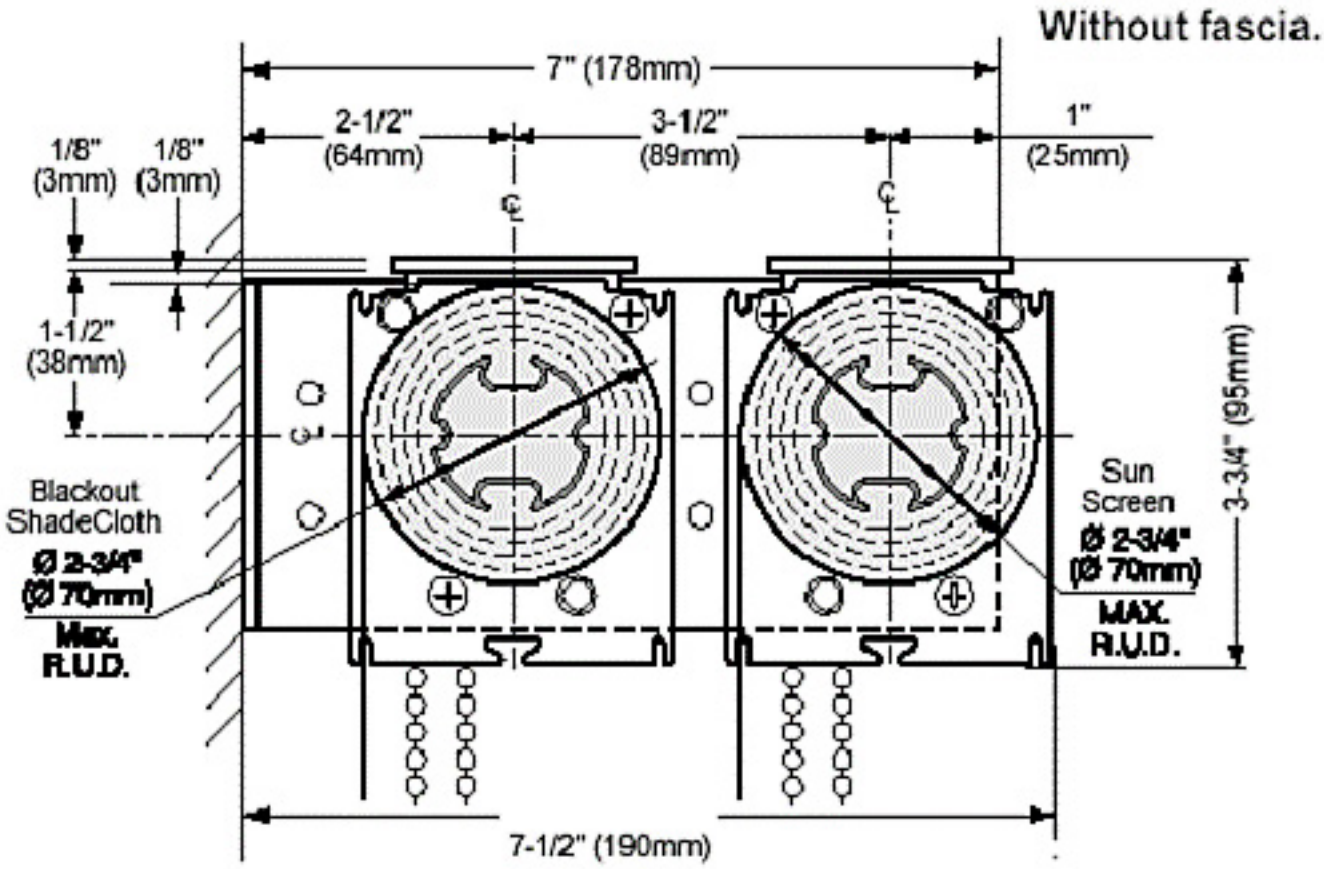Mecho®/5 DoubleShade® Bracket #10, with and without fascia.