SHOW HOUSE by MOEN

Replacement Parts

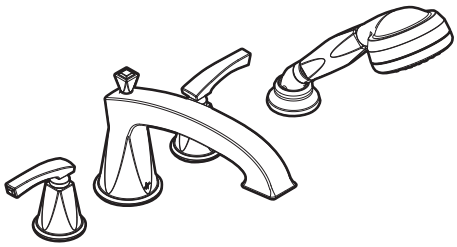

Divine™

Two-Handle Roman Tub Trim w/Integral Diverter

Models:	TS254	Chrome
	TS254BN	Brushed Nickel
	TS254HN	Hammered Nickel

Order by Part Number. For use with S924 valve.

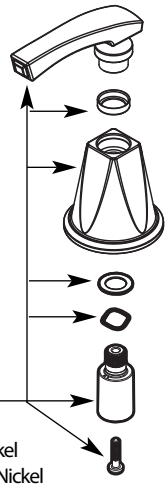

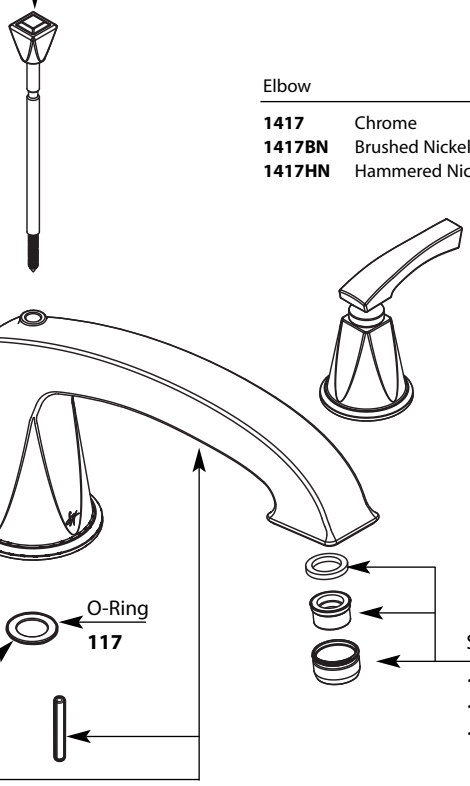

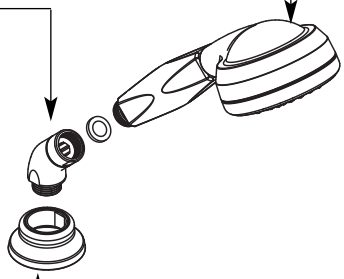

Lift Rod

134407	Chrome
134407BN	Brushed Nickel
134407HN	Hammered Nickel

Hand Shower

134408	Chrome
134408BN	Brushed Nickel
134408HN	Hammered Nickel

Elbow

1417	Chrome
1417BN	Brushed Nickel
1417HN	Hammered Nickel

Handle Kit

134402	Chrome
134402BN	Brushed Nickel
134402HN	Hammered Nickel

Escutcheon

1411	Chrome
1411BN	Brushed Nickel
1411HN	Hammerd Nickel

Plug Button

1512	Chrome
1512BN	Brushed Nickel
1512ST	*(Used for Hammered Nickel)*

Set Screw

99892

O-Ring

117

Stream Straightener

14913	Chrome
14913BN	Brushed Nickel
14913ST	*(Used for Hammered Nickel)*

Spout Kit

134406	Chrome
134406BN	Brushed Nickel
134406HN	Hammered Nickel

M-pact™ System

Valve Sold Separately

TO ORDER PARTS CALL: 1-800-BUY-MOEN
www.moen.com