Miele

Operating and Installation Instructions

Fridge-Freezer Combination
KF 1801 Vi
KF 1811 Vi
KF 1901 Vi
KF 1911 Vi

en - US, CA

To prevent accidents
and appliance damage
read these instructions
before
installation or use.

M.-Nr. 07 155 800

Contents

IMPORTANT SAFETY INSTRUCTIONS 4
Guide to the Fridge-Freezer combination 7
Before use 9
Turning the appliance On/Off 9
Settings 10
Turning the button sound On/Off 11
Turning off for longer periods of time 12
Alarm 13
Temperature alarm 13
Door alarm 13
Setting the temperature 14
Setting the temperature in the refrigerator and freezer sections 14
SmartFresh drawers 16
Storage temperatures 16
Humidity 16
Using the SmartFresh drawers 16
Using the refrigerator efficiently 18
Using the freezer efficiently 19
Freezing food 19
Defrosting 20
Cooling drinks quickly 20
SuperCool 21
Ice cube maker 22
Automatic defrost 23
Adjusting the interior fittings 24
Moving the shelves 24
Floating drawer 24
Removing the storage shelf from above the drawer 26
Ice cube container 27
Small freezer basket 27
Large freezer basket with partition 28
Cleaning and care 29
Cleaning the interior and accessories 29
Humidity filters 30
Ventilation slits 31
Door seals 31
Changing the light bulb 32

Water filter 34
Exchanging the water filter 35
Filter Performance Data Sheet 38
Frequently asked questions 40
After sales service 47
Caring for the environment 50
Installation 51
Installation site 51
Custom door panels 53
Installation options 53
Adjusting the door opening angle (optional accessory) 55
Dimensions 56
Installing the appliance 58
Before you begin 58
RemoteVision module installation 60
Preparing the installation niche 61
Sliding the appliance into the installation niche 64
Aligning the appliance 65
Attaching the appliance to the installation niche 66
Preparing the custom door 68
Attaching and aligning the custom door front 70
Plumbing 76
Electrical connection 79
RemoteVision 80

IMPORTANT SAFETY INSTRUCTIONS

When using the appliance, follow basic safety precautions, including the following:

Read all instructions before installation and use to prevent accidents and machine damage.

This appliance is intended for residential use only. Use only as described in this Operating manual.

Only use the appliance for its intended purpose.

This appliance complies with current safety requirements. Improper use of the appliance can lead to personal injury and material damage.

Keep these operating instructions in a safe place and pass them on to any future user.

Electrical Safety

▶ Before installation, make sure that the voltage and frequency listed on the data plate correspond with the household electrical supply. This data must correspond to prevent injury and machine damage. Consult a qualified electrician if in doubt.

▶ Before installation or service, disconnect the power supply to the work area by unplugging the unit, "tripping" the circuit breaker or removing the fuse.

▶ Do not use an extension cord to connect this appliance to electricity. Extension cords do not guarantee the required safety of the appliance (e.g., danger of overheating).

▶ Be certain your appliance is properly installed and grounded by a qualified technician. To guarantee the electrical safety of this appliance continuity must exist between the appliance and an effective grounding system. It is imperative that this basic safety requirement be met. If there is any doubt, have the electrical system of the house checked by a qualified electrician.

▶ Only connect power to the appliance when all installation and plumbing work is complete.

Installation

This appliance is top-heavy and must be secured to prevent the possibility of tipping forward. Keep the doors closed until the appliance is completely installed and secured per the installation instructions.

▶ This appliance must be installed and connected in compliance with the installation instructions.

▶ Installation and repair work should be performed by a Miele authorized service technician. Work by unqualified persons could be dangerous and may void the warranty.

▶ Installation must comply with local plumbing regulations and state laws.

▶ Do not operate any appliance with a damaged cord or plug, or if the appliance has been damaged in any manner. Contact Miele's Technical Service Department.

▶ This equipment is not designed for maritime use or for use in mobile installations such as recreational vehicles or aircraft.

▶ Do not install the fridge/freezer in a room with too low an ambient temperature, e.g., a garage, as this may lead to the appliance switching off for longer periods so that it cannot maintain the required temperature.

▶ In refrigerators with an automatic ice maker, avoid contact with the moving parts of the ejector mechanism, or with the heating element located on the bottom of the ice maker. Do not place fingers or hands on the automatic ice making mechanism while the refrigerator is plugged in.

▶ The ice cube maker is not suitable for connection to a hot water supply.

▶ Do not use water that is microbiologically or chemically unsafe or of unknown quality without adequate disinfection or other treatment before or after the filter is used; the filter alone is not an adequate safeguard.

Use

▶ Persons who lack physical, sensory or mental abilities, or experience with the machine should not use it without supervision or instruction by a responsible person.

▶ To reduce the risk of injury, do not allow children to play in, on or near the appliance, especially in the door hinge area.

▶ After your appliance is in operation, do not touch the cold surfaces in the machine, ice cubes or frozen food, particularly when hands are damp or wet. Skin may adhere to these extremely cold surfaces.

▶ Do not refreeze frozen foods which have thawed completely.

▶ Do not handle frozen food or ice with wet hands. Danger of injury.

▶ Do not store or use gasoline or other flammable vapors and liquids in the vicinity of this or any other appliance.

▶ Do not deactivate the water filter display.

▶ Do not use sharp-edged objects to remove frost and ice, or separate frozen foods and remove ice trays. They will damage the evaporator, causing irreversible damage to the appliance.

▶ Do not use defrosting sprays or de-icers, as they might contain substances which could damage the plastic parts or which could cause a build-up of gases and pose a danger to health.

▶ Do not use any oils or grease on the door seal, as these will cause the seal to deteriorate and become porous with time.

▶ Do not block the ventilation gaps in the plinth or the top of the appliance housing unit, as this can impair the efficiency of the appliance, increase the electricity consumption and cause damage to the appliance.

▶ Never use a steam cleaner to clean the appliance. Pressurized steam could damage electrical components and cause a short circuit.

Disposal of your old appliance

▶ Before disposing of an old appliance, first make the door latch or lock unusable.

▶ Take off the doors.

▶ Leave the shelves in place so that children may not easily climb inside.

▶ Consult with your municipal policy on recycling.

▶ Be careful not to damage any part of the pipework while awaiting disposal by:

- puncturing the refrigerant channels in the evaporator.
- bending any pipework.
- scratching the surface coating.

Splashes of refrigerant can damage the eyes.

▶ Your old refrigerator may have a cooling system that used CFCs (chlorofluorocarbons). CFCs are believed to harm stratospheric ozone.
If you intentionally release this CFC refrigerant, you can be subject to fines and imprisonment under provisions of environmental legislation. Make sure the CFC refrigerant is removed and disposed of by a qualified technician.

SAVE THESE INSTRUCTIONS

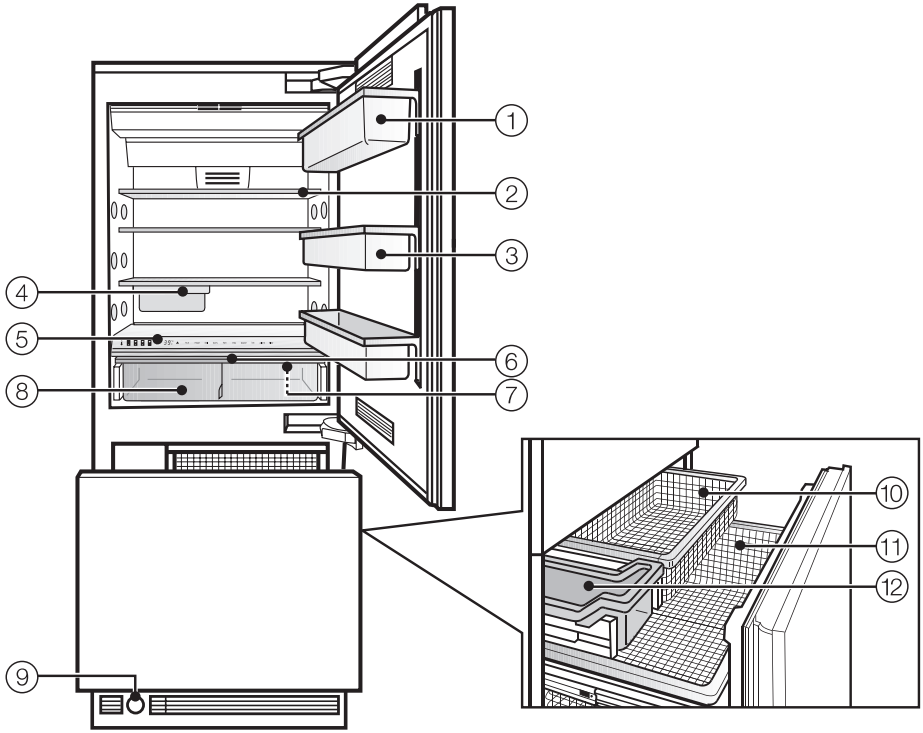

① Hinged door shelf

② Shelves (height adjustable)

③ Door shelves (height adjustable)

④ Floating drawer

⑤ Control panel

⑥ Humidity filter

⑦ Main switch to turn the appliance On/Off

⑧ SmartFresh drawer

⑨ Water filter

⑩ Small freezer basket

⑪ Large freezer basket

⑫ Ice cube container

Control panel

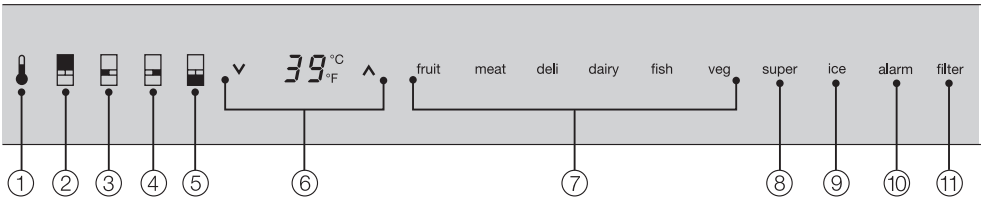

① Access button "🌡" activates the control panel

② Refrigerator

③ Left SmartFresh drawer

④ Right SmartFresh drawer

⑤ Freezer

⑥ Temperature display
∨ colder; ∧ warmer
Allows you to set the desired temperature in the refrigerator or freezer section

⑦ Food type(s) to be stored in the SmartFresh drawer

⑧ On/Off sensor button for the SuperCool function

⑨ On/Off sensor button for the ice cube maker

⑩ Sensor button for the temperature and door alarm*

⑪ Water filter change indicator*

* Only visible when the relevant function is activated

Before using for the first time

- Clean the inside of the appliance and the accessories with a mild solution of warm water and liquid dish soap. Dry with a soft cloth.

After installing the appliance, wait at least 30 minutes before turning the appliance on. During transport, fluids in the refrigeration system may have shifted and will need some time to settle.

Turning the appliance On/Off

- Open the upper appliance door.

- Turn the appliance On/Off with the main switch.

The main switch is located on the right-side underneath the control panel.

All zones are switched on or off together.

Once on, the appliance begins cooling. When the doors are open, the interior lights come on.

The access button will light in the control panel.

The preset temperatures (factory default settings) are reached after a few hours. Do not put any food in the appliance until the preset temperatures are reached.

⚠ Turning off the appliance with the main switch does not safely isolate it from the power supply.

Using the settings

When a sensor button has been selected with a finger touch, it will appear yellow.
A de-selected button will appear white.

■ Touch the access button "🌡" so it turns yellow.

On the control panel you will now see the sensor buttons of the four appliance zones.

ice

At the right of the control panel there is a sensor button to turn the ice maker on and off.

When the ice maker is in operation, the sensor button appears yellow.

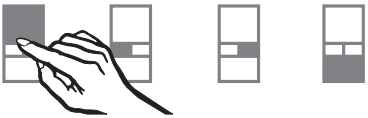

■ To change settings (e.g., to set the temperature, etc.), touch the sensor button for the appliance zone you wish to set.

The selected sensor button appears yellow and depending on the zone selected additional sensor buttons may appear on the control panel.

Depending on the zone selected, you can now:

– adjust the temperature,

– select the SuperCool function, or

– select settings for the SmartFresh drawers by food type.

For additional information, see the corresponding sections in this manual.

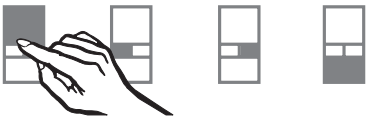

■ To de-select a zone touch the sensor button for that particular zone so that it turns white, or select another sensor button.

■ To leave the settings menu, touch the access button "🌡" so it turns white. The last settings entered are stored. If the access button is not pressed the display will go out after approx. 30 secs.

The sensor buttons for the four appliance zones now disappear from the control panel.

Custom settings

In the custom settings mode you can select and change functions. The function possibilities are described in the respective chapters of this manual.

Function	Display text
Temperature °C - °F	t
RemoteVision Module settings	r
Button sound on/off	b
Confirm filter changes	h
Exit Custom Settings mode	c

Turning the button sound On/Off

If you prefer the buttons to be silent when touched, the button sound can be turned off.

- Touch the access button "🌡" so it turns yellow.

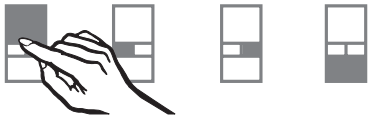

- Touch the sensor button for the refrigerator section so it turns yellow.
- Note the position of the ∨ button, but do not touch.
- Touch the access button "🌡" again so it turns white.

Only the access button "🌡" is visible.

- Place one finger on the position of the ∨ button and hold (the ∨ button will not be visible).
- While holding down the ∨ button, press the access button "🌡" once. Keep holding the ∨ button down until the following appears in the display (approx. 5 seconds).

- Tap the ∨ button until b appears in the display.
- Touch the access button "🌡" to confirm.

- By touching the ∨ button, you can choose between:
  b 0 : Button sound is off
  b 1 : Button sound is on
  b – : Return to menu.
- Touch the access button "🌡" to confirm the setting.
- Tap the ∨ button until you see c in the display.
- Touch the access button "🌡".

You have now left the Custom settings mode.

When you are in the Custom settings mode the door alarm is turned off automatically. Once the door is closed it is reactivated.

Turning off for longer periods of time

If the appliance is not going to be used for an extended time (for example, during a vacation) some precautions should be taken.

- Shut off the water supply line, (several hours before switching off the appliance)
- Take all food out of the appliance
- Turn the appliance off at the main switch
- Unplug the appliance
- Empty the ice cube container
- Clean the interior
- Remove and discard the water filter (secure the filter cap)
- Leave the doors open to prevent odors

The appliance is equipped with an alarm system, to ensure that the temperature does not rise unnoticed because of energy loss or open doors.

The alarm system is always operational, it does not need to be turned on.

Temperature alarm

If the temperature becomes too warm, an alarm sounds, the "alarm" indicator turns red and flashes. At the same time the affected zone flashes in the display.

If the freezer zone is affected, the temperature display shows the warmest temperature reached during the alarm.

The alarm will sound and the display will flash if:

– too much warm air flows into the appliance, for example when food is being loaded, re-arranged, or taken out.

– large amounts of food are being frozen at once.

– the power fails.

Turning the temperature alarm Off

As soon as the alarm condition is corrected, the alarm signal turns off and the affected zone stops flashing in the display. The "alarm" indicator goes out.

■ **To turn the alarm off early**, press the "alarm" sensor button.
The alarm signal turns off. The "alarm" indicator remains red and the corresponding appliance zone continues to flash until the alarm condition is corrected.

If the temperature in the freezer zone reaches 0°F (-18°C) or higher, check that food has not defrosted.

Door alarm

If one of the appliance doors is left open for over 5 minutes, an alarm signal will sound and the "alarm" indicator will turn red.

Turning the door alarm Off

Once the door is closed the alarm turns off and the "alarm" indicator goes out. If the door has not been closed properly, the alarm will sound again after five minutes.

■ **To turn the alarm off early**, press the "alarm" sensor button. The "alarm" indicator and signal will turn off.

Setting the temperature in the refrigerator and freezer sections

The refrigerator and freezer sections can be set independently of each other.

- Touch the access button "🌡" so it turns yellow.

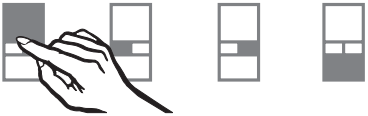

- Touch the sensor button for the refrigerator or freezer section so it turns yellow.

- Use the ∨ and ∧ buttons next to the temperature display to set the temperature warmer or colder.

Tap the ∨ and ∧ sensor buttons to raise/lower the temperature 1°, or hold them down to move through the temperature range more quickly.

> The temperature display on the control panel always shows the **desired** temperature.

Temperature range

The temperature can be selected within the following ranges:

– Refrigerator:
  36°F to 46°F (2°C to 8°C)

A temperature of 37°F (4°C) in the refrigerator section is recommended.

– Freezer:
  7°F to -11°F (-14°C to -24°C).

To freeze fresh food and store frozen food for an extended period of time, a temperature of 0°F (-18°C) is suggested.

The room temperature and the installation location can affect the time it takes for the appliance to get to the desired temperature. If the room temperature is too high, it may not be possible for the appliance to reach the lowest temperature.

Temperature unit (Fahrenheit/Celsius)

The temperature can be displayed in degrees Fahrenheit (°F) or Celsius (°C).

- Touch the access button "🌡" so it turns yellow.

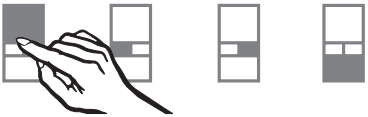

- Touch the sensor button for the refrigerator section so it turns yellow.
- Note the position of the ∨ button, but do not touch.
- Touch the access button "🌡" again so it turns white.

Only the access button "🌡" is visible.

- Place one finger on the position of the ∨ button and hold (the ∨ button will not be visible).
- While holding down the ∨ button, press the access button "🌡" once. Keep holding the ∨ button down until the following appears in the display (approx. 5 seconds).

- Tap the ∨ button until ⊢ appears in the display.
- Touch the access button "🌡" to confirm.
- By touching the ∨ button you can select either Fahrenheit or Celsius for the temperature display.
  ⊢ 0: Fahrenheit
  ⊢ 1: Celsius
  ⊢ –: return to menu
- Touch the access button "🌡" to confirm the setting.
- Tap the ∨ button until a c appears in the display.
- Touch the access button "🌡".

You have left the Custom settings mode.

> When you are in the Custom settings mode the door alarm is turned off automatically. Once the door is closed it is reactivated.

The SmartFresh drawers provide the right combination of temperature and humidity. The result is freshness up to three times longer than in the other zones of the refrigerator.

Storage temperatures

For fresh foods that are not adversely affected by cold, the best range is 32° - 37°F (0° - 3°C). This helps to keep the food fresh considerably longer than in the rest of the refrigerator, spoiling is minimal.

The temperature is set to approx. 35°F (1.5°C).

Humidity

The closer the humidity in the appliance matches the moisture content of the food, the more moisture the food will retain, and the fresher and crisper it will stay over a longer period of time.

The optimal humidity is determined on the basis of the food stored in the appliance.

Proper humidity is assisted by 2 humidity filters located above the SmartFresh drawers. These filters allow air to pass through, yet retain moisture.

Using the SmartFresh drawers

■ Use the sensor button to select the desired drawer.

The selected sensor button turns yellow, and the sensor buttons for the food choices appear.

fruit meat deli dairy fish veg

The most recently selected food type(s) appear yellow.

■ Use the sensor buttons to select the desired food type(s), so they appear yellow.

– Several food types can be selected at the same time.

– To delete a food type, simply press it again.

– Depending on the food types selected, the optimal humidity is determined for the crispers.

– The "deli" and "dairy" settings are the most energy efficient.

■ Touch the access button "🌡" to confirm the settings.

■ Place the food in the drawer.

For optimal storage conditions, it is always best to store similar foods together in one crisper.

Foods that are best stored under dry conditions

– fresh fish and shellfish, meats, poultry, sausage, dairy products and deli salads.

Foods that are best stored under moist conditions

– fresh produce, e.g., vegetables, lettuce, herbs, mushrooms, cabbage, fruit.

Remember that higher moisture levels can only be attained when the food is stored **unpacked so air can circulate freely**.

Different storage zones

Due to the natural circulation of air in the appliance, there are different temperature zones in the refrigerator. Cold, heavy air sinks to the lowest section of the appliance. Make use of these different zones when placing food in the appliance.

This appliance uses a dynamic cooling feature to establish a constant temperature during cooling. As a result, the differences between temperature zones are less pronounced.

Leave some space between items, so air can circulate freely around them. Make sure the ventilation slits are not covered - this is important for the cooling performance.

Warmest area

The warmest area is in the top section of the door (storage shelf). Use this area to store items such as butter and cheese.

Coldest area

The coldest area in the refrigerator is directly above the SmartFresh drawers. The temperature in the drawers themselves is even colder.

Use these cold areas in the refrigerator for all highly perishable foods, such as:

- fish, meat, poultry,
- deli meats, store-bought meals,
- dishes or baked goods containing eggs or cream,
- fresh bread dough, pastry dough, cake batters,
- dairy products.

If storing high-proof alcohol, make sure it is tightly closed and stored upright.

Do not store cooking oil in the refrigerator door. Traces of oil can cause stress cracks to occur in the plastic components in the door.

Do not allow food to touch the rear wall of the appliance, it may freeze to the wall.

Freezing food

Fresh food should be frozen as quickly as possible. This helps maintain the nutritional value, vitamin content, appearance and taste of the food.

Never refreeze partially or fully defrosted food. Consume defrosted food as soon as possible, it will lose its nutritional value and spoil if left for too long. Do not refreeze defrosted food unless it has been cooked.

Before placing food in the freezer

- When you are planning to freeze large amounts of food (more than 4 ½ lbs [2 kg]), switch on the SuperCool function ahead of time (see "SuperCool").
  This will provide the food already in the freezer with a protective boost of cold air.

Placing food in the freezer

Food to be frozen can be placed anywhere in the freezer section.

Use the large freezer basket for large quantities of food.

Load bearing capacity of the baskets:

	Small basket	Large basket
KF 18X Vi/SF	30 lbs (14 kg)	72 lbs (33 kg)
KF 19X Vi/SF	41 lbs (19 kg)	94 lbs (43 kg)

- Spread the food to be frozen across the bottom of the freezer basket or across the shelves, so that it will freeze through to the core as quickly as possible.
- When placing items in the freezer, make sure the packaging and containers are dry, to keep them from sticking together when frozen.

When freezing, make sure that already frozen food does not come into contact with fresh food being frozen, this could cause the frozen food to defrost.

Defrosting

Frozen food can be defrosted in different ways:

- in a microwave oven,
- at room temperature,
- in the refrigerator (the cold given off by the frozen food helps to keep the other food cold),
- in a steam oven.

Poultry It is especially important to observe proper hygiene when defrosting poultry. Never save the liquid from defrosted poultry. Drain it away and promptly wash the container, the sink and your hands. Danger of salmonella poisoning.

Fruit should be defrosted at room temperature in its packaging, or in a covered bowl.

Most vegetables can be cooked while still frozen. Simply place directly into boiling water or hot oil.

Cooling drinks quickly

To cool drinks quickly, switch on the SuperCool function. See "SuperCool" for more information.

Do not leave bottles in the freezer for more than **1 hour**, closed containers could burst.

When the SuperCool function is activated, the appliance is cooled as quickly as possible (to a factory-preset temperature).

SuperCool

When used with the **refrigerator** the SuperCool function is ideal for the rapid cooling of drinks and refrigerating large quantities of food.

When used with the **freezer** the SuperCool function is ideal for freezing large quantities of unfrozen food. The function should be switched on **4-6 hours** before the fresh food is placed in the freezer.
If the max. freezing capacity is used, **24 hours** are recommended.
This helps food to freeze quickly and retain its nutrients, vitamins, flavor and appearance.

Switching on SuperCool

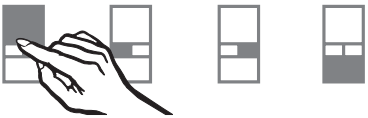

- Touch the sensor for the refrigerator or freezer (as desired) so it turns yellow.

- Touch the SuperCool sensor button so it turns yellow.

In the temperature display for the zone selected, the new temperature setting appears:
Refrigerator: 35°F (2°C)
Freezer: -22°F (-30°C)

The temperature in the appliance now begins to fall, with maximum cooling in the zone selected.

Switching off SuperCool

The SuperCool function automatically switches off after:
Refrigerator: approx. 6 hours
Freezer: approx. 52 hours
The sensor button turns white, and the appliance continues running at normal power.

To save energy, the SuperCool function can be switched off early, once the food and/or drinks are sufficiently chilled.

- Touch the SuperCool sensor button so that it turns white.

The temperature display for the zone selected returns to the original temperature setting.

The appliance now continues running at normal power.

For the automatic ice cube maker to operate, it must be connected to the household water supply. See "Plumbing".

Turning on the ice cube maker

Make sure that the ice cube container is under the ice cube maker, as far as possible.

Ice cubes will not be produced unless the container is completely closed.

- Touch the sensor button for the ice cube maker so that it turns yellow.

As soon as the freezer has cooled to a freezing temperature, the ice cube tray fills with water. Cold air is blown directly over the tray.

As soon as the ice cubes are frozen, they fall into the ice cube container.

The ice cube maker can produce approx. 140 ice cubes within 24 hours.

After the appliance is turned on for the very first time, it can take up to 10 hours for the first ice cubes to drop out of the ice cube maker and collect in the container.

Once the ice cube container is full, the ice cube maker switches off automatically.

Do not use the ice cube container for rapid cooling of food or drinks. The ice cube maker may become blocked and be damaged.

Do not use the first batch of ice cubes from the ice cube maker. Discard the ice produced in the first 24 hours after switching on the ice cube maker.
This applies for the very first use, and whenever the appliance has been out of service for an extended period of time.

The amount of ice cubes produced depends on the temperature in the freezer section. The lower the temperature, the more ice cubes will be produced in a given period of time.

Turning off the ice cube maker

The water supply line must be shut off several hours before the appliance or ice cube maker is switched off.

- Touch the sensor button for the ice cube maker so that it turns white.

Refrigerator section and SmartFresh drawers

The refrigerator and SmartFresh drawers defrost automatically.

During normal operation, condensate and frost can form on the rear wall of the refrigerator and drawers.
You do not need to remove this build-up, it will defrost and evaporate automatically with the heat generated by the appliance.

Freezer section

The freezer section defrosts automatically.

The moisture generated in the appliance collects in the evaporator. It is automatically defrosted and dissipated by the condenser periodically.

This automatic defrosting system enables the freezer to remain permanently ice-free, while ensuring that the food stored in the freezer stays frozen.

Moving the shelves

The shelves can be adjusted according to the height of the food.

- Using both hands, grasp the shelf from underneath and lift slightly so that the rear of the shelf is slightly above the mountings.
- Pull the shelf forward.
- Move the shelf to the desired height, then insert the (rear) hooks into place.
- Make sure the shelf is level.

Floating drawer

The floating drawer can be moved to the left or right, moved to another shelf, or removed.

- Pull the drawer straight out, so that it passes over the catches and remove.
- To replace the drawer slide it straight in along the rails.

SmartFresh drawer

These drawers are set on telescopic tracks. They can be pulled in and out for loading and unloading, or removed for cleaning.

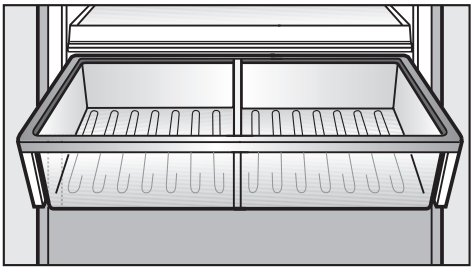

- Open the drawer.

On the hinged-side of the door is a safety lock, which must be turned to a horizontal position before the drawer can be removed.

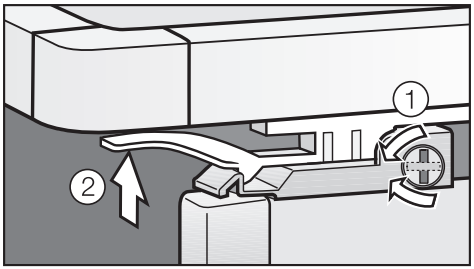

- Using a suitable object, e.g., coin, turn the safety lock to a horizontal position ①.
- On both sides of the drawer, pull the latches ② upward and lift the drawer out of the refrigerator.

Push the tracks back into the refrigerator to avoid injury.

The divider in the drawer can also be removed for cleaning.

- Remove the drawer.
- Lift the divider upward and out.

To re-insert the divider, slide it back down along the tracks.

Important: If the divider is not in place, the SmartFresh drawer will not work properly.

Replacing the SmartFresh drawer

- Completely extend the telescopic tracks.
- Lay the drawer on the tracks so that it connects in the front and back.
- Turn the safety lock back to the vertical position.
- Slide the drawer in.

Adjusting the door shelves

For easier loading, unloading, and cleaning, the door shelves can be shifted or completely removed.

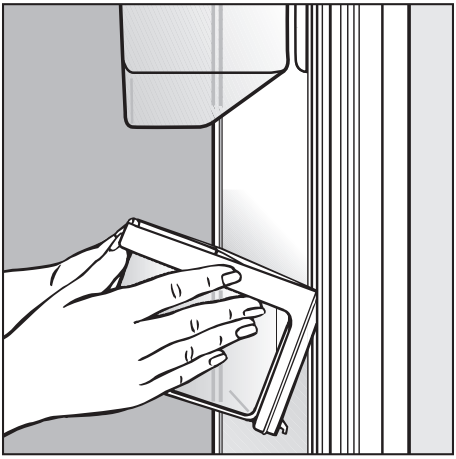

- Using both hands, grasp the door shelf by the frame and tip it slightly forward.
- Slide the tipped shelf up or down along the slide-rails, and click it into place with the lower hooks.
- Make sure the shelf is level.

Removing a door shelf

- Slide it upward all the way to the top of the slide-rails, until it can be removed.

Replacing a door shelf

- Start at the top of the slide-rails and slide the shelf down into the desired position.

Removing the hinged door shelf

- Pull the stops upward and out of the shelf, and remove the shelf lid upward.
- Now remove the hinged container upward and out.

Removing the storage shelf from above the drawer

- Remove the rear finishing strip, move the glass plate slightly toward the rear, and carefully lift it upward and out.

Ice cube container

The ice cube container is set on telescopic tracks, and can be removed for loading, unloading and cleaning.

- Slide the container forward until resistance is felt.

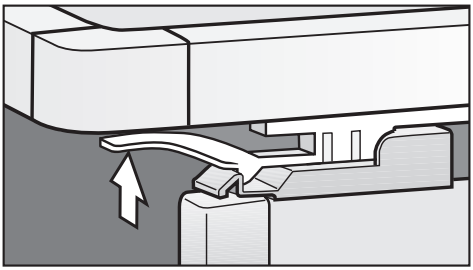

- On both sides of the container, pull the latches (see arrow) upward and lift the container out of the freezer.

Push the tracks back into the freezer to avoid injury.

Replacing the ice cube container

- Completely extend the telescopic tracks.
- Lay the container onto the tracks so that it connects in the front and back.
- Slide the container in.

Small freezer basket

The small freezer basket can be removed for cleaning.

- Slide the basket forward until resistance is felt.

On the hinged-side of the door is a safety lock, which must be turned to a horizontal position before the drawer can be removed.

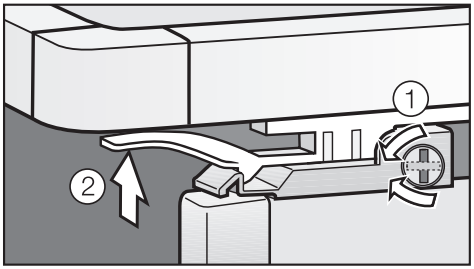

- Using a suitable object, e.g., coin, turn the safety lock to a horizontal position ①.
- On both sides of the basket, pull the latches ② upward and lift the basket out of the freezer.

Replacing the small freezer basket

- Fully extend the telescopic tracks.
- Lay the basket onto the tracks so that it connects in the front and back.
- Turn the safety lock back to the vertical position.
- Slide the freezer basket in.

Large freezer basket with partition

The large freezer basket can be removed for cleaning.

- Lift the freezer basket out of the freezer.

The partition in the basket can also be removed for cleaning:

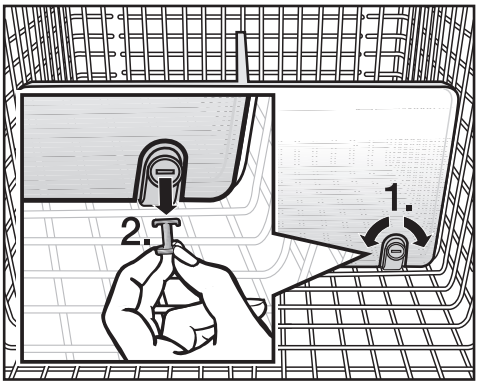

- Using a suitable object, e.g., coin, turn the safety locks to a horizontal position, **1**.
- Remove the safety locks from the fasteners, **2**.
- Pull the partition out of the basket.

Replacing the partition

- Arrange the fasteners in an upright position and audibly click the partition into them.
- Place the safety locks into the fasteners. Using a suitable object, e.g., coin, turn the pegs into a vertical position.

Replacing the large freezer basket

- Place the basket into the freezer, making sure it is seated correctly in the connection holes.

To reduce the risk of electrical shock, disconnect the appliance from the power supply by shutting off the power main, tripping the circuit breaker or unplugging the power cord before maintenance.

Never use cleaning agents containing abrasive substances such as sand, soda, acids, chlorides or chemical solvents.
Non-abrasive cleaning agents are also unsuitable, as they can cause matte areas to appear.

Only use a mild solution of warm water and liquid dish soap to clean this appliance.

Do not use a steam cleaner to clean this appliance. Pressurized steam could penetrate electrical components and cause a short circuit.

Do not allow water to get into the electronic unit or lights.

Before cleaning

- Use the main switch to turn the appliance off completely.

The main switch is located on the right side underneath the control panel.

- Unplug the power cord.
- Remove any food from the appliance and store it in a cool place.
- Take out any removable parts, e.g., shelves.

Cleaning the interior and accessories

Use a mild solution of warm water and liquid dish soap. Wash all accessories and drawers by hand. Do not wash in a dishwasher.

- Clean the appliance as needed.
- After washing, wipe down the interior and accessories with a clean wet cloth, then dry with a soft cloth.
  Leave the appliance doors open for a short time, so the moisture can evaporate.

Aluminum frames

The shelf frames are made of aluminum.

- Clean the frames with a mild solution of warm water and liquid dish soap.

Aluminum is susceptible to scratches and nicks, treat with care.

The aluminum frames may become discolored or otherwise altered if soiling is not cleaned away promptly.

Do not use stainless steel cleaners; lime removers; scouring pads, such as pot scrubbers; or used sponges that still contain abrasive cleanser residue to clean the frames.

Humidity filters

The two humidity filters, located above the SmartFresh drawers, must be removed for cleaning.

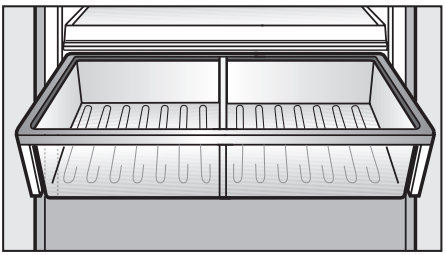

- Remove the SmartFresh drawer.

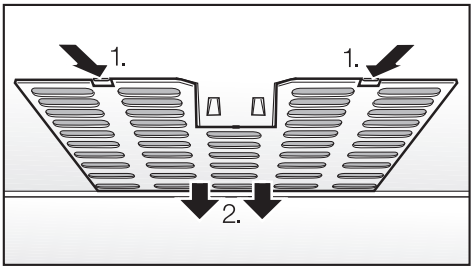

- Unhook the filter cover, **1.** in each side of the drawer and remove them along with the filters downwards starting from **2**.

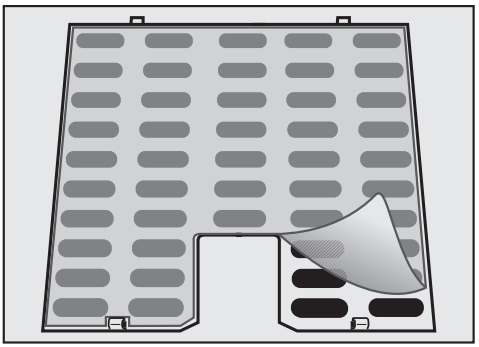

- Clean the filters by rinsing them with lukewarm water.

Do not clean in a dishwasher or washing machine. This will damage the filter.

- Air-dry the filters.
- Place the filters back in the filter cover.
- Put the filter cover back in place, inserting the rear hooks first.
- Re-insert the SmartFresh drawer.

Ventilation slits

- Check the ventilation slits in the base panel regularly. Remove any dirt/dust with a vacuum cleaner or brush. Clean as needed.

Door seals

Do not use oil or grease on the door seals. This may cause the seals to deteriorate and become porous over time.

- Clean the door seals with warm water and dry thoroughly.

After cleaning

- Return all shelves and accessories.
- Place food back in the refrigerator section, close the appliance doors, insert the plug in the power outlet and turn the appliance on.
- Switch on the SuperCool function for the freezer section. The freezer section will cool down quickly.
- Once the temperature in the freezer section is cold enough, place food in the freezer baskets and return them to the freezer.

Changing the light bulb

The lighting automatically switches off after the door has been open for approx. 5 minutes. This is not a fault.

After the bulb has cooled for a short time it will turn on again.

If the light does not come on when the door is opened briefly, the light bulb should be changed.

- Use the main switch to turn the appliance off.

To reduce the risk of electric shock, disconnect the appliance from the power supply by unplugging or tripping the circuit breaker.

Upper lighting

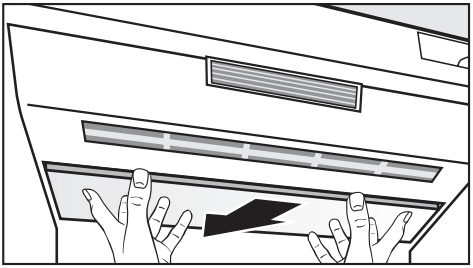

- Grasp the front of the light cover with both hands, and slide it back.
- Carefully pull the cover forward and out.

Never touch a halogen bulb with bare fingers.
When inserting a glass halogen bulb always hold it with a soft cloth.

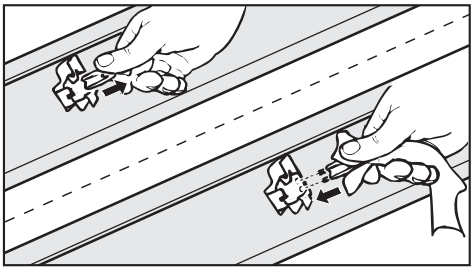

- Remove the defective light bulb.
- Place the new bulb in the socket.
  Halogen bulb type:
  20 W/12 V/socket GY 6.35.
- Slip the rear of the light cover back into position, then pull it forward and into place.

Side lighting

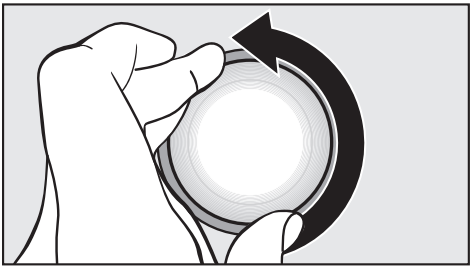

- Turn the light cover counterclockwise and pull out.

Never touch a halogen bulb with bare fingers.
When inserting a glass halogen bulb always hold it with a soft cloth.

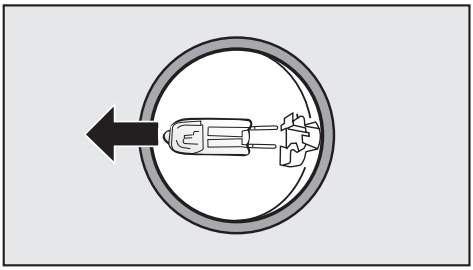

- Pull the defective light bulb from the socket.
- Place the new bulb in the socket.
  Halogen bulb type:
  5 W/12 V/socket G 4.
- Put the light cover back on and turn clockwise into place.
- Restore power to the appliance.

Water filter

The water filter improves the taste and smell of ice cubes by removing chlorine and other substances from the incoming tap water.

It is important to change the water filter regularly.

To avoid serious illness or death, do not use water that is microbiologically or chemically unsafe or of unknown quality without adequate disinfection or other treatment before or after use of a filter.

Note:

- After installing a new water filter and switching on the ice maker, discard the first 24 hour's worth of ice production.
- If the ice maker has not been used for a prolonged time discard any ice cubes in the freezer, empty the container and discard the ice production of the next 24 hours.
- If the appliance or ice maker have not been routinely used for several weeks or months, or if the ice cubes have an unpleasant odor, change the water filter.

Note: Air trapped in the system may cause water and the filter cartridge to eject forcefully. Use caution when removing.

- Depending on how many ice cubes are produced, the filter will need to be changed approximately every 6 months.

filter

- When the filter indicator turns **red**, the filter will need to be changed soon.

Replacement filters can be ordered from Miele.

- When the red filter indicator **flashes**, it is time to change the filter.

Exchanging the water filter

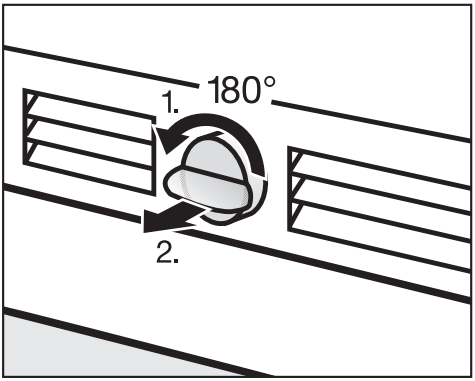

- Push in and rotate the filter cap on the base panel of your appliance counterclockwise 180°, **1**.
- Pull the used filter cartridge out of the appliance, **2**.

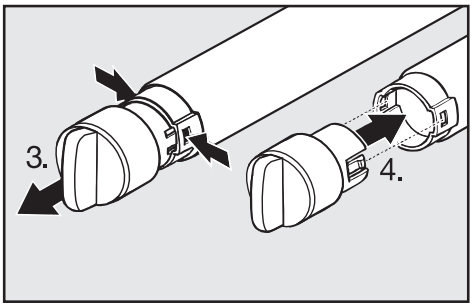

- Remove the cap from the used filter, **3**.
- Take a new filter cartridge out of the packaging and remove the protective cap.
- Push the cap onto the new filter cartridge, **4**.

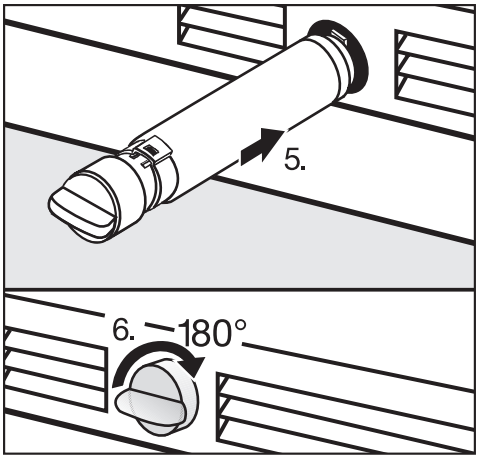

- Push the filter cartridge with cap, in a horizontal position, all the way into the opening in the base panel, **5**.
- Rotate the filter cartridge clockwise 180° until the cap is in a horizontal position, **6**.

filter

The filter change needs to be confirmed before the "filter" indicator will go out. See "Re-setting the filter indicator".

Whenever you replace the filter, the system must be re-set. This will ensure the indicator light for the next filter change will come on at the right time.

Re-setting the filter indicator

The filter indicator still flashes in the display.

filter

- Touch the access button "🌡" so it turns yellow.

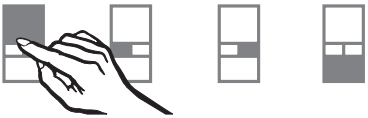

The various appliance zones are now visible.

- Touch the sensor button for the refrigerator so it turns yellow.
- Note the position of the ∨ button, but do not touch.
- Touch the access button "🌡" again so it turns white.

Only the access button "🌡" is visible.

- Place one finger on the position of the ∨ button and hold (the ∨ button will not be visible).
- While holding down the ∨ button, press the access button "🌡" once. Keep holding the ∨ button down until the following appears in the display (approx. 5 seconds).

- Tap the ∨ button until an *h* appears in the display.
- Touch the access button "🌡" again.

By touching the ∨ button you can select the following settings:
h 0: filter is installed
h 1: filter is not installed (external filter)
h 2: filter change confirmed
h -: return to menu

- Tap the ∨ button until *h 2* appears in the display.

> *h 1* should only be selected if an external filter or bypass cartridge is being used. See "Deactivating the water filter".

- Press and hold the access button "🌡" for 2 seconds to confirm the filter change.

The filter is now reset.

- Tap the ∨ button until h - appears in the display.
- Touch the access button "🌡".
- Tap the ∨ button until c appears in the display.
- Touch the access button "🌡".

You have left the Custom settings mode.

The "filter" indicator is no longer visible on the control panel.

When you are in the Custom settings mode the door alarm is turned off automatically. Once the door is closed it is reactivated.

After installing a new water filter discard the first 24 hours of ice production.

Deactivating the water filter

The ice cube maker in this appliance can be operated without the installed water filter, for example if the household water supply already uses a water filter.

If you choose this option, it is important to insert a bypass cartridge. Only then can the performance of the appliance be ensured.

To purchase a bypass cartridge, contact Miele.

Filter Performance Data Sheet

State of California
Department of Public Health

Water Treatment Device
Certificate Number

06 - 1775

Date Issued: March 10, 2006

Date Revised: April 3, 2008

Trademark/Model Designation	Replacement Elements
9000 077095	9000 077104
Miele 07134220	07134220

Manufacturer: Cuno, Incorporated

The water treatment device(s) listed on this certificate have met the testing requirements pursuant to Section 116830 of the Health and Safety Code for the following health related contaminants:

Microbiological Contaminants and Turbidity

Cysts
Turbidity

Organic Contaminants

None

Inorganic/Radiological Contaminants

None

Rated Service Capacity: 740 gals **Rated Service Flow:** 0.75 gpm

Conditions of Certification:

Do not use where water is microbiologically unsafe or with water of unknown quality, except that systems certified for cyst reduction may be used on disinfected waters that may contain filterable cysts.

Performance Data Sheet For Filter Model 07134220

Using Replacement Cartridge 07134220

This system has been tested according to NSF/ANSI Standards 42 and 53 for the reduction of the substances listed below. The concentration of the indicated substances in water entering the system was reduced to a concentration less than or equal to the permissible limit for water leaving the system, as specified in NSF/ANSI 42 and 53.

System tested and certified by NSF International in Model 07134220 against NSF/ANSI Standard 53 for the reduction of Cysts and Turbidity and against Standard 42 for the reduction of Chlorine Taste and Odor; Nominal Particulate Class I.

Note that while the testing was performed under standard laboratory conditions, actual performance may vary.

To a capacity of 739.68 gallons (2800 liters).

Substance	Average Influent Concentration	Influent Challenge Concentration mg/L	Product Water Concentration	Average % Reduction	Maximum Permissible Product Water Concentration	Max. Effluent	Min. % Reduction	NSF Test
Cysts*	166500	Minimum 50,000/L	1	99.99	99.95	1	99.99	516458-05
Turbidity	10.7	11 + 1 NTU	0.31	97.09	0.5 NTU	0.49	95.42	516456-05
Particulate Class I Particle size: > 0.5 to < 1 um	5700000	At least 10,000 particles/ml	30583	99.52	≥ 85%	69000	98.9	511079-03
Chlorine taste and odor	1.9	2.0 mg/L ± 10%	0.05	97.3	≥ 50%	0.06	96.84	511081-03

* Based on the use of Cryptosporium parvum oocysts

Application Guidelines/Water Supply Parameters	
Water pressure	30- 120 psi (207 - 827 kPa)
Water temperature*	33°F - 100°F (0.6°C - 38°C)
Service flow	0.75 gpm (2.83 lpm)

IMPORTANT: Must be installed and operated in accordance with application guidelines.

Failure to do so may void warranty.

Change filter at least every 6 months.

Flush new cartridge for 3 minutes.

CAUTION: To avoid property damage due to water leakage, you MUST read and follow these operating instructions before installation and use of this product.

WARNING: Do not use with water that is microbiologically unsafe or of unknown quality without adequate disinfection before or after the system. Systems certified for cyst reduction may be used on disinfected waters that may contain filterable cysts.

For estimated costs of replacement elements please visit your local appliance dealer or parts distributor.

NSF is a registered trademark of NSF International.
CUNO is a trademark of 3M Company used under license.
© 2007 3M Company. All rights reserved.

a 3M company

CUNO Engineered Products, Inc.
1000 Apollo Road
Eagan, MN 55121-2240 U.S.A.

Frequently asked questions

With the aid of the following guide minor problems can be corrected without a service call.

Repairs should only be carried out by a qualified and trained person in strict accordance with local and national safety regulations. Unauthorized repairs could cause personal injury or machine damage and may void the warranty.

Problems with temperature		
Issue	**Possible fault**	**Solution**
The refrigerator or freezer section does not get cold.	The machine is not turned on.	Check whether the appliance is switched on at the main switch. The temperature display must be lit up.
	The machine is not plugged in.	Check that the plug is correctly inserted in the power outlet.
	Check that the fuse has not tripped.	Reset the circuit breaker.
	The temperature is set incorrectly.	Check the display.
The temperature in the refrigerator or freezer section is too low.	Select a warmer temperature.	See "Selecting the correct temperature".
	The SuperCool function is still on.	SuperCool automatically shuts off after: 6 hours for refrigerator; 52 hours for freezer.
	The door is not closed.	Check that the doors have been closed properly.
	A large amount of food is being frozen at the same time.	This makes the compressor run longer, causing the temperature in the freezer section to fall automatically.
The freezer section is too warm.	The room temperature is lower than the ambient temperature for which the appliance is designed.	Raise the temperature of the room. Operating the appliance in a room that is too cold will cause the cooling system to switch off for too long, causing the freezer section to become too warm.

General problems		
Issue	**Possible fault**	**Solution**
Water is flowing out of the appliance.	Close the shut-off valve immediately.	
	Check whether the water pipe in the appliance is defective.	Contact Miele Technical Service.
	Check whether the water pressure is too low.	Contact a plumber.
	Check whether the correct water valve has been installed.	Self-tapping valves and $^{3}/_{16}$" (4.76 mm) saddle valves reduce the water pressure and can block the pipe.
The door to the freezer section will not open.	This is not a fault. The suction caused by opening and closing the door too many times in succession prevents it from opening.	Wait a few minutes, then try again. It should now open without force.
The compressor kicks on very frequently and for too long.	The ventilation slits are covered or dusty.	Clean with a vacuum or brush.
	The doors have been opened too frequently, or a large amount of fresh food has been put in at once for freezing.	Once the fridge gets down to the set temperature the compressor will turn off.
	The door is not closed.	Check that the doors have been closed properly.
Nothing shows in the display.	Power is not reaching the appliance or there has been a power failure.	Check the power supply to the machine.

Alarm / Indicator warnings		
Issue	**Possible fault**	**Solution**
The alarm is ringing.	The appliance door(s) have been open for longer than 5 minutes.	Close the door(s).
The alarm is ringing and the "alarm" indicator is flashing.	The door is not closed.	Once the alarm condition has been corrected, the alarm will turn off and the "alarm" indicator will stop flashing. The temperature indicator will indicate the highest temperature reached during the alarm.
	A large amount of food is being frozen at the same time.	
	There has been a power failure.	
The filter display is red.	This is a warning that the water filter needs to be changed soon.	Order replacement filters from Miele.
The filter display is flashing red.	The water filter needs to be changed.	See "Exchanging the water filter".

Problems with the ice maker		
Issue	**Possible fault**	**Solution**
The ice cube maker will not switch on.	The appliance is not plugged in.	Check that the appliance is connected to the power supply.
The ice cube maker is not producing any ice cubes.	When the appliance is turned on for the very first time, it can take up to 10 hours for the first ice cubes to drop out of the ice cube maker and collect in the container.	
	The appliance is not turned on.	Check that the appliance is switched on.
	The water supply line was not primed (purged of air) before the appliance was used for the first time.	Contact Miele.
	Check if: – the ice cube maker is switched on. – the water supply line is open. – there are ice cubes stuck together and blocking the exit. – the ice cube container is in the right position. – the freezer compartment temperature is too high. – the water pressure is too low. The water pressure must be between 25 and 120 psi (1.72-8.25 bar).	See "Ice Cube Maker" and/or "Plumbing" for more information.
	Check whether the correct water valve has been installed.	Self-tapping valves and $^{3}/_{16}$" (4.76 mm) saddle valves reduce the water pressure and can block the pipe.

Problems with the ice maker		
Issue	**Possible fault**	**Solution**
The ice cubes are small.	Other domestic appliances that use water are in operation.	Avoid using such items as a dishwasher, washing machine or shower at the same time.
	Check whether the water filter needs changing.	See "Water filter" for more information.
	Check the water pressure. The water pressure must be between 25 and 120 psi (1.72-8.25 bar).	Consult a plumber.
	Check whether the correct water valve has been installed.	Self-tapping valves and $^{3}/_{16}$" (4.76 mm) saddle valves reduce the water pressure and can block the pipe.
The ice cubes have an unpleasant odor/flavor.	When ice is stored for an extended period it may absorb odors, which affects the taste.	Use the ice maker more frequently.
	Check if the ice cube container is dirty.	Clean the container.
	Unsealed packages in the freezer will transfer odor/flavor particles to the ice cubes.	Check that food has been packed in airtight containers.

Problems with the ice maker		
Issue	**Possible fault**	**Solution**
The ice maker is not producing enough ice or the ice cubes are misshapen.	Check the water pressure. The water pressure must be between 25 and 120 psi (1.72-8.25 bar).	Contact a plumber.
	Check that the freezer temperature is not too low.	See "Selecting the correct temperature".
	Change the water filter.	See "Water filter".
Ice is forming in the supply hose to the ice maker.	Check the water pressure. The water pressure must be between 25 and 120 psi (1.72-8.25 bar).	Contact a plumber.
	Check whether the freezer compartment temperature is too high.	See "Selecting the correct temperature".

The appliance is making noises.		
Issue	**Possible fault**	**Solution**
Brrrrr...	Humming noise made by the compressor. This noise can get louder for brief periods when the motor is switching on.	These noises are not a fault. The noise of the compressor and the coolant circulating in the system is unavoidable.
Blubb, blubb....	A gurgling noise can be heard when coolant is circulating through the pipes.	
Click....	Clicking sounds are made when the thermostat switches the compressor on and off.	
Sssrrrrr....	On multi-zone and frost-free appliances you can sometimes just hear the movement of air circulating inside the appliance.	
Rattling, vibrating	The appliance is uneven.	Realign the appliance using a level, by raising or lowering the screw feet underneath the appliance.
	The appliance is touching another appliance or piece of furniture.	Move it away.
	Drawers, baskets or shelves are unstable or sticking.	Check all removable items and refit them correctly.
	Bottles or containers are unstable or knocking against each other.	Separate them.
	The transport cable clips are hanging loose at the back of the appliance.	Remove the clips.

In the event of a fault which you cannot easily fix yourself, please contact the Miele Technical Service Department at the address on the back of this booklet.

When contacting the Technical Service Department, please quote the model and serial number of your appliance given on the data plate inside the appliance.

MieleCare

(USA only)

MieleCare, our Extended Service Contract program; gives you the assurance of knowing that your appliance investment is covered by 5 years of worry-free ownership. **MieleCare** is the only Extended Service Contract in the industry that guarantees repairs by a Miele Authorized Service Provider using genuine Miele parts. Only genuine Miele parts installed by factory-trained professionals can guarantee the safety, reliability and longevity of your Miele appliance.

Please note that unless expressly approved in writing by the Miele Service department, Extended Service Contracts offered by other providers for Miele products will not be recognized by Miele. Our goal is to prevent unauthorized (and untrained) service personnel from working on your Miele products, possibly doing further damage to them, you and/or your home.

To learn more about MieleCare Extended Service Contracts, please contact your appliance dealer or visit us online at:
http://miele.com/mielecare

Miele

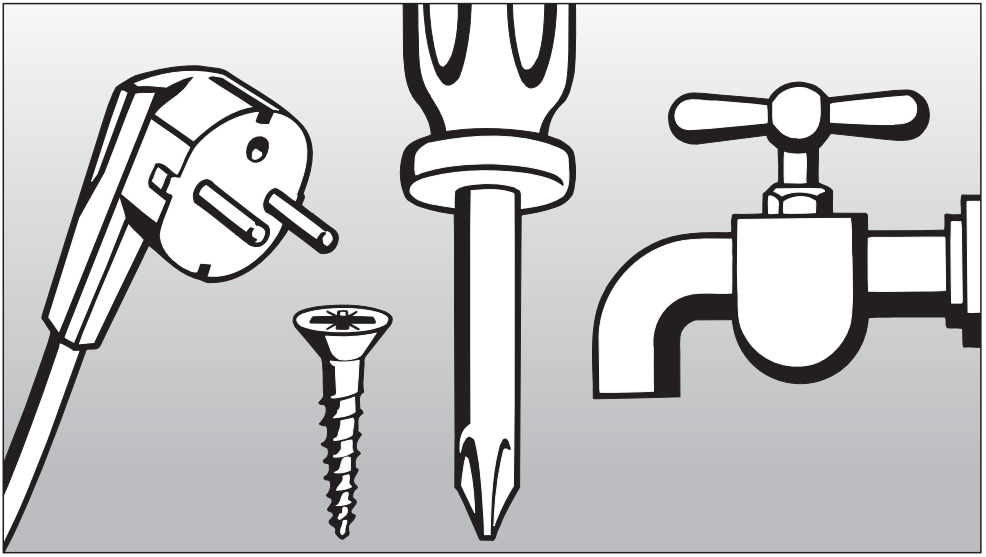

Installation instructions

To prevent accidents
and machine damage
read these instructions
before
installation or use.

Disposal of packing materials

The cardboard box and packing materials are biodegradable and recyclable. Please recycle.

Ensure that any plastic wrappings, bags, etc., are disposed of safely and kept out of the reach of babies and young children. Danger of suffocation!

Disposal of an old appliance

Old appliances contain materials that can be recycled. Please contact your local recycling center about the possibility of recycling these materials.

Before discarding an old appliance, disconnect it from the electrical supply and cut off the power cord to prevent it from becoming a hazard.

Have the appliance installed by a qualified technician, according to the enclosed installation instructions.

⚠ WARNING
This appliance is top-heavy and must be secured to prevent it from tipping forward.
Keep the doors closed until the appliance is completely installed and secured as per the installation instructions.

Empty weight of your machine:

KF 18X1 Vi . . . . . 455 lbs (206 kg)
KF 19X1 Vi . . . . . 498 lbs (226 kg)

Installation site

The appliance should be installed in a dry, well-ventilated room.

Do not install the appliance:
- outdoors
- in an environment with dripping water
- in rooms that are at risk of frost.

The installation location should not be exposed to direct sunlight, nor near a heat source, such as an oven, radiator, etc.

The ambient temperature should not drop below 55°F (13°C) or rise above 110°F (43°C), otherwise malfunctions may occur.

If installation next to a heat source is unavoidable, use a suitable insulating plate or observe the following minimum distances from the heat source:

– 1 $^{1}/_{4}$" (3 cm) from an electric cooktop or oven.

– 12" (30 cm) from a gas cooktop or oven.

Base

A fully loaded appliance is very heavy. The load-bearing capacity of your floor must meet the following requirements:

KF 18X1 Vi . . . . . 952 lbs (432 kg)
KF 19X1 Vi . . . . . 1,185 lbs (537 kg)

To ensure that the appliance is installed securely and functions properly, the base must be flat, level and made of a hard, rigid material.

If in doubt, contact Miele.

Furniture/fixtures

The new appliance will be mounted securely to adjacent and overhead furniture/fixtures.
For this reason, it is essential that all attachable furniture/fixtures be connected securely to the floor or wall by a suitable means.

Ventilation

The air intake and outlet must not be blocked or covered in any way. They also need to be dusted/cleaned on a regular basis.

Installation niche

To ensure safe, trouble-free installation and the best possible cosmetic result, check to be sure that the installation space complies with the installation dimensions. See "Niche dimensions".

The side walls of the installation cavity must be plumb.

The minimum thickness of the side walls and the top wall must be 5/8" (16 mm).

The minimum thickness of the toe-kick panel must be ½" (13 mm). A thickness of $^{3}/_{4}$" (19 mm) is recommended.

Custom door panels

This appliance is compatible with all styles and designs of kitchen cabinetry.

The total weight of the decorative panel(s) must not exceed the following:

KF 18X1 Vi
Upper door . . . . . 104 lbs (47 kg)
Lower door . . . . . 22 lbs (10 kg)

KF 19X1 Vi
Upper door . . . . . 84 lbs (38 kg)
Lower door . . . . . 31 lbs (14 kg)

Installation options

There are many different installation options. You are limited only by the design of the kitchen.

The door hinge cannot be exchanged.

Single column

The appliance can be installed at any preferred location in the kitchen.

However, be sure the door will open and close properly in the chosen location.

Side-by-side

This appliance can be installed "side-by-side" with another fridge/freezer using a "Merging Kit".

The "Merging Kit" can be obtained from Miele.

Contact Miele or your dealer for specific information about which combinations will work with your appliance.

. . . without partition

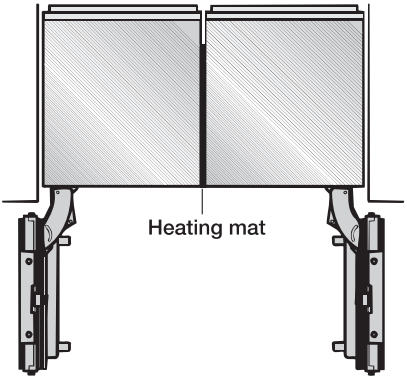

If the appliances are installed directly next to each other (without a partition), they will need to be attached together. A heating mat must also be installed. This will help avoid condensation and prevent damage.

For instructions on how to attach the appliances and install the heating mat, please refer to the instructions included in the "Merging Kit" available from Miele.

. . . with partition

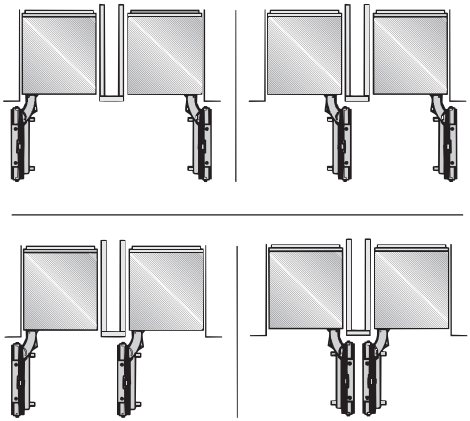

The minimum thickness of the partition is $^{5}/_{8}$" (16 mm).

If there is a partition between the adjacent appliances, then each appliance is to be individually installed within its own niche.

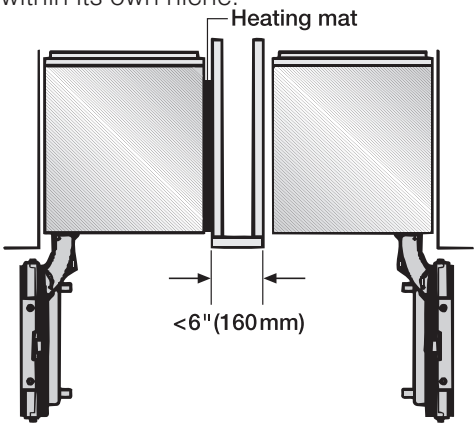

A heating mat must only be installed if the partition wall is less than 6" (160 mm) wide:

For instructions on how to install the heating mat please refer to the instructions included in the "Merging Kit".

The "Merging Kit" can be obtained from Miele.

Side panels

If one side of the appliance is visible, a side panel must be used.

The side panel must be firmly secured to the wall, the floor and the overhead furniture/fixtures before the appliance is placed in the cavity.

The dimensions of the side panel are taken from the opposite wall of the installation space. During installation, ensure that the cavity is square and the measurements are correct.

Adjusting the door opening angle (optional accessory)

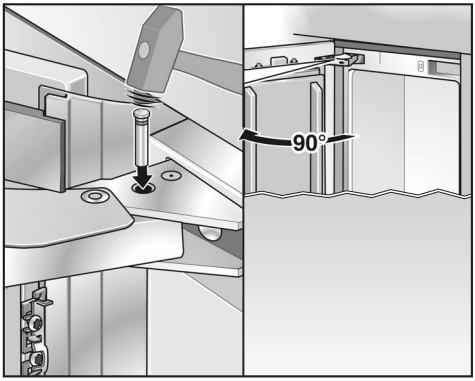

Depending on the installation site, it may be necessary to adjust the door opening angle to 90°.

- Open the door.
- Insert the banking pin through the holes and drive in with a hammer.

Front panel gap kit (optional accessory)

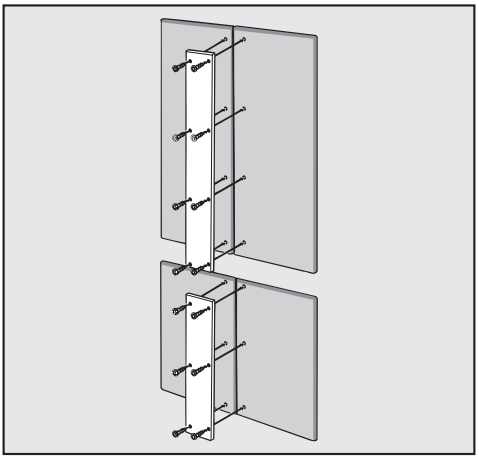

Two adjacent furniture doors can be attached instead of one large door.

To connect these furniture doors, a metal strip can be purchased as an optional accessory. Contact Miele.

When attaching the metal strip to the furniture doors, observe the maximum length of the screws and the position of the drill holes.
Always screw into the best possible load-bearing material of the custom doors.

Niche dimensions

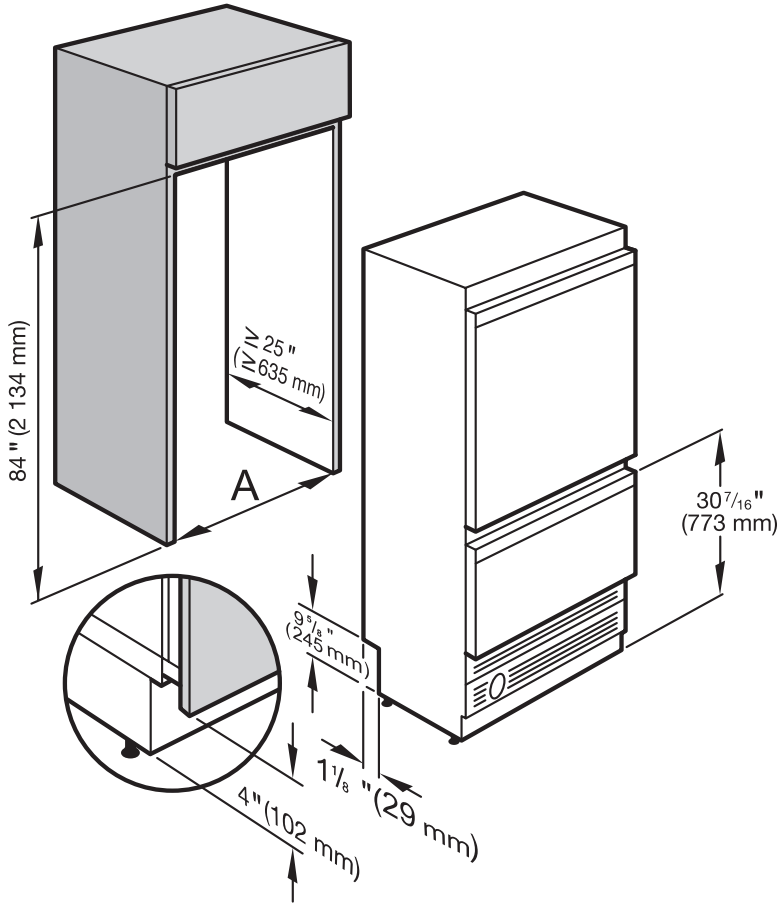

Niche width (A)	
KF 1801 Vi, KF 1811 Vi	**30" (762 mm)**
KF 1901 Vi, KF 1911 Vi	**36" (915 mm)**

Power supply and water connection

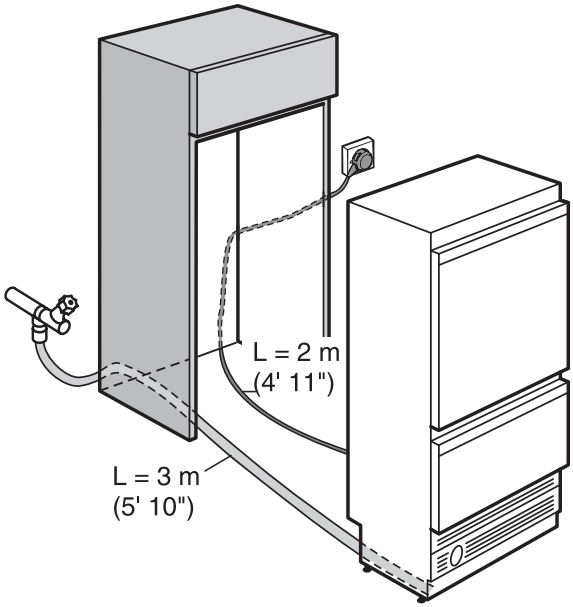

Door dimensions (open min. 90°)

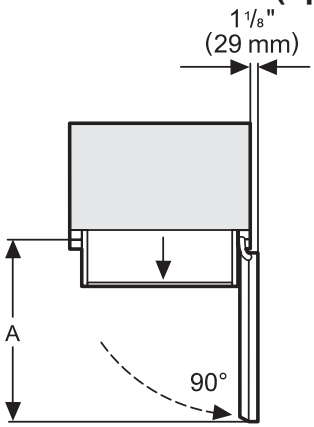

A	
KF 1801 Vi, KF 1811 Vi	32 5/8" (829 mm)
KF 1901 Vi, KF 1911 Vi	38 11/16" (982 mm)

Before you begin

Read these instructions completely and carefully.
Have the appliance installed by a qualified technician, according to the enclosed installation instructions.

To reduce the risk of injury or damage to the product, two people should be used for installation.

These installation instructions are intended for use by qualified installers. In addition to these instructions, the appliance must be installed in accordance with all local codes. In the absence of a local code, the following should be used:

- In the USA, the National Electric Code, ANSI/NFPA 70 - latest edition/State and Municipal codes and/or local codes.
- In Canada, the Canadian Electric code C22.1 - latest edition/Provincial and Municipal codes and/or local codes.

Tools needed for installation

- Cutter with adjustable blade
- Cordless screwdriver T 20
- Torx screwdriver T 20
- Hammer drill for drilling holes in wall or floor
- Wood drills in different sizes
- Hammer
- Open-ended wrench ½" (SW 13 mm)
- Box-end wrench
- $^{5}/_{16}$" (8 mm) hex nut driver
- Adhesive tape
- Multi-grip pliers
- Level
- Metal tape measure
- Square

Other

- Stepladder
- Dolly, hand truck
- Wooden beam
  (cross section min. 3" x 4"
  [75 mm x 100 mm] as an alternative tilt protection, length depends on the width of the installation cavity)
- Wood screws in different sizes

Optional Tool

- "Merging Kit" for side-by-side installation.
- Front panel gap kit

Check the installation niche

To ensure a safe, trouble-free installation and the best possible cosmetic result, check to be sure that the installation space complies with the installation requirements.

- Check the base (see "Installation").
- Check the dimensions of the cavity.
- Check that the cavity is square.
- Check the location of the power outlet.
- Check the location of the water connection (see "Plumbing").
- Check that all furniture parts in the vicinity of the appliance are securely connected to the wall.
- Check that the adjacent furniture/fixtures do not collide with the open door.

Before installation

⚠ Caution - the appliance is very heavy. Use caution when unpacking and opening the door, danger of tipping.

- To protect the base from damage during installation, attach a hard board, linoleum, etc., to the floor in front of the intended installation location.
- Take the supplied accessories out of the protective packaging.

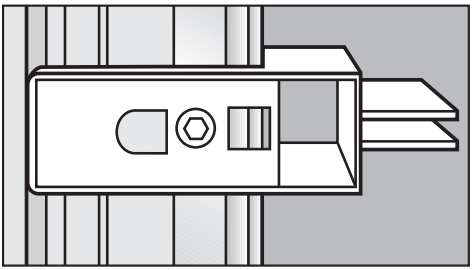

- Do **not** remove the installation supports from the appliance doors. They will be used later in the installation niche.

There are transportation safety devices inside the appliance to protect the shelves and storage compartments until installation is complete. **Do not remove them**, or parts may be damaged.

- Check the appliance for damage in transit.

Do not install the appliance if it is visibly damaged. If in doubt, contact your dealer.

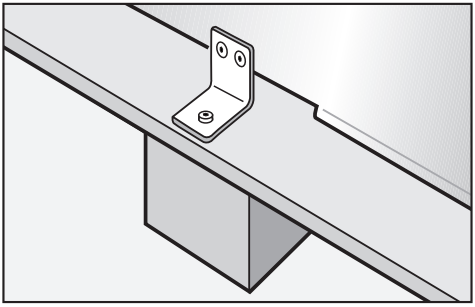

- Loosen the bracket that holds the appliance to the pallet.

> ⚠ Caution! The appliance is no longer secured and may be unstable.

- From the rear of the appliance carefully lift it from the pallet.

Once the appliance is on the ground it can be wheeled around.

RemoteVision module installation

> Always disconnect the appliance from the power supply when performing installation, maintenance or service work.
> Install the RemoteVision module before placing the appliance in its installation niche.
> Once connected the RemoteVision module will increase the energy consumption of the appliance.

The slot for the RemoteVision module is located in the lower area of the back of your appliance.

- Unscrew the screws ① on the cover ② and pull off the sticker ③.

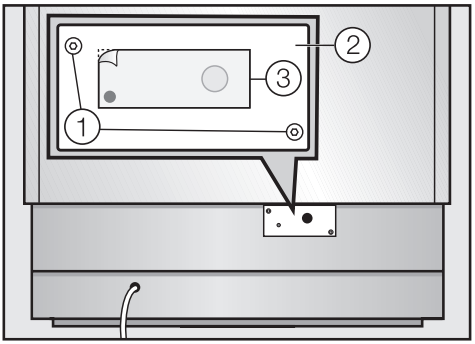

- Remove the cover ②.
- Push the module into the slot until it locks into place.

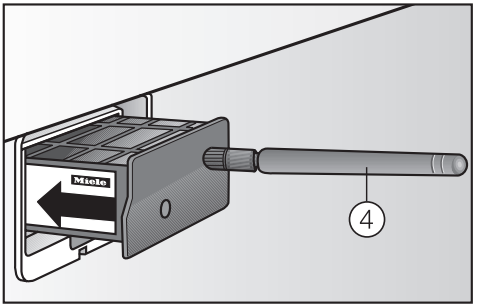

- Connect the appliance to the power supply and turn it on. After several seconds the indicator light will come on.

The indicator light will display different colors one after the other; any control light at the end indicates that the module was correctly installed.

If the indicator light does not come on, installation of the module was unsuccessful. In that case, repeat the process. If that does not correct the problem, contact Miele.

- Pull the antenna ④ straight out.

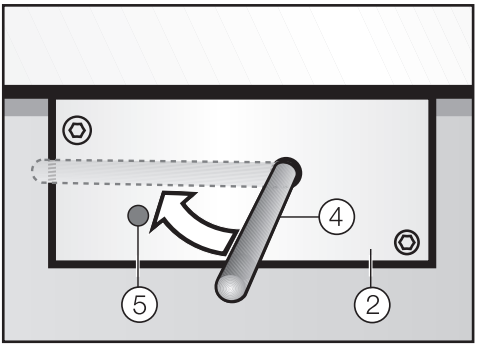

- Guide the cover ② over the antenna ④ and screw on the cover.
- Angle the antenna ④ so that it faces to the right or left.
- If necessary, disconnect the power supply and continue installing the appliance.

Preparing the installation niche

Keep the appliance doors closed until it is securely fastened in the niche. Tipping hazard.

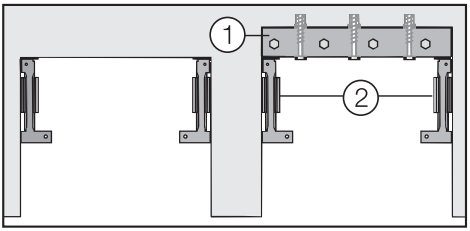

If the installation niche is deeper than the appliance, a solid wooden beam ① can be placed behind the anti-tip brackets ② so the appliance can be securely attached to the base or wall.

The length of the wooden beam ① should be to the width of the installation space.

If possible, always screw the wooden beam into existing studs.

Mounting Accessories

The mounting accessories needed for installing the appliance into the niche are included in the packaging. Several plastic bags are included which are numbered alphabetically.

The bag needed for each step will be marked with its respective letter.

- Use the included Torx screwdriver to tighten the screws.

Anti-tip brackets

The anti-tip brackets help keep the appliance safely secured to the installation niche to prevent tipping.

Two anti-tip brackets are recommended for each appliance or appliance combination (side-by-side).

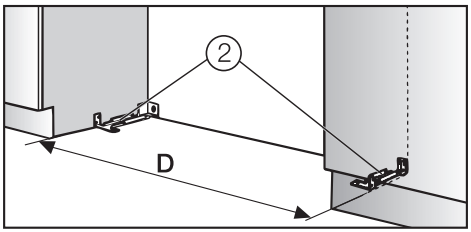

The distance "**D**" between the anti-tip brackets ② is the width of the appliance.

- Position the anti-tip brackets ② on the left and right walls of the appliance niche.
- Mark the holes through the anti-tip brackets ② on the floor of the installation niche.
- Set the brackets aside.

> Assure that there are no electrical wires or plumbing in the area which the screws could penetrate-risk of injury and damage.

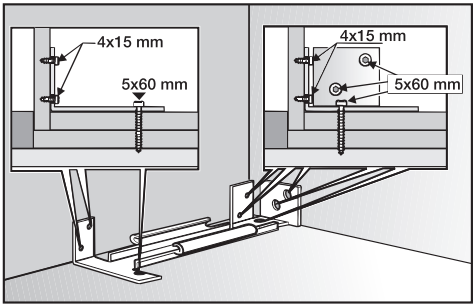

- Drill pilot holes:
  - $^1/_8$" (3 mm) for 5 x 60 mm wood screws
  - $^1/_{16}$" (2 mm) for 4 x 15 mm wood screws.

- Tightly secure the anti-tip brackets in the niche.

Be certain that the screws penetrate through the flooring and into the wall plate a minimum of $^3/_4$" (19 mm).

Securing an alternative anti-tip device

If the anti-tip brackets cannot be attached securely, an alternative anti-tip device can be used.
Ensure that there is no "give" between the appliance and the anti-tip device.

If possible, always screw the wooden beam to existing studs.

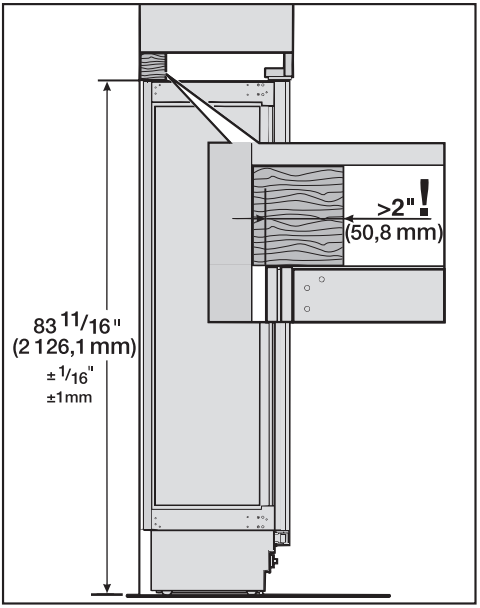

- Cut a wooden beam (cross section min. 3" x 4" [75 mm x 100 mm]) to the required length.

The length is equal to the width of the installation niche.

– If the installation niche is deeper than the appliance, select a beam with a larger cross section, or attach two beams.

– The beam must cover the appliance by at least 2" (50.8 mm).

- Mark the installation height (lower edge of the beam) on the rear wall of the niche.
- Select screws according to the thickness of the wooden beam. Example: 3 ½" (89 mm) screw for 2x4 beam.
- Determine the number of screws based on the cavity width, to ensure that the beam will be attached securely.
- Locate wall studs near the rear wall of the cavity and mark drill holes in the beam.
- Pre-drill the wooden beam.
- Attach the wooden beam to the rear wall of the niche.

If a side-by-side installation is desired, connect the two appliances together. See the Installation Manual included with the "Merging Kit".

Now prepare the water connection from the appliance to the main supply line (see "Plumbing").

Sliding the appliance into the installation niche

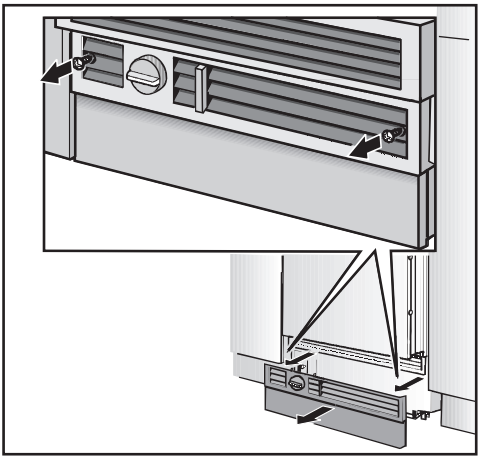

- Unscrew the plinth.

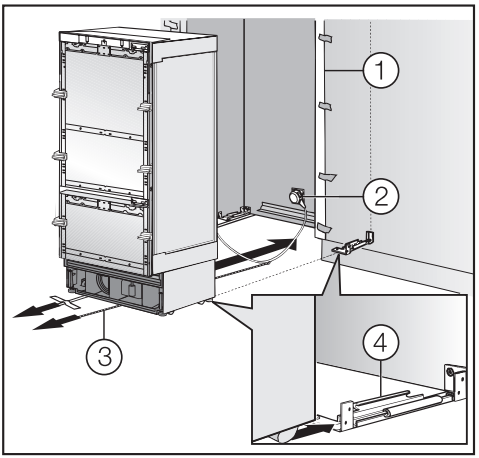

- To protect the corners of the installation space, attach the supplied edge protector ① on both sides with adhesive tape.
- Plug the appliance into the power outlet ②.

The plug of the appliance should be easily accessible after installation. If the plug is not accessible after the appliance has been installed, disconnection from the power supply should be completed via the circuit breaker.

In the case of side-by-side installations, a separate outlet must be used for each appliance.

- To prevent the power cord from becoming caught:
  Tie a piece of string to the middle of the power cord and feed it forward under the appliance. When sliding the appliance in, pull the cable forward ③.
- Carefully slide the appliance into the space until the height-adjustable wheels interlock with the anti-tip brackets ④.

If resistance is felt when attempting to slide the appliance into the installation niche - for example, because the floor is uneven,

- Turn the rear adjustable wheels slightly outward (see "Aligning the appliance"), then push the appliance in.

Be careful not to damage the water pipe or power cord attached to the floor.

- Remove the edge protector ①.

Aligning the appliance

■ Align the appliance with the custom front.

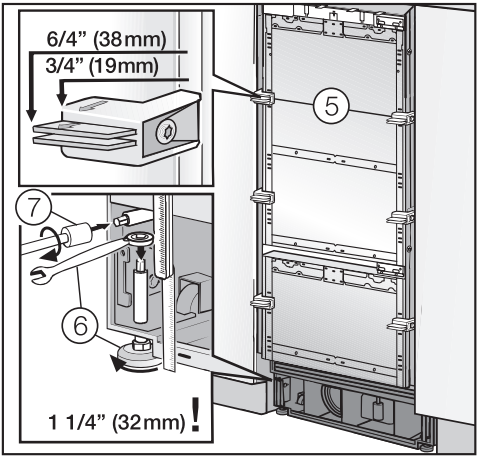

The installation aids ⑤ have been designed for the following total thicknesses of custom doors:

– $^{3}/_{4}$" (19 mm)

– 1 ½" (38 mm).

Be sure to take into account the possible differing thicknesses of the custom doors that are to be fitted subsequently.

The height-adjustable feet at the front and rear can all be adjusted from the front.

– Front: with an open-ended wrench ½" (SW 13).
  The feet can be adjusted from the top and bottom ⑥.

– Rear: with a $^{5}/_{16}$" (8 mm) hex nut driver via flexible shaft ⑦.

A mark is located on the appliance base and is used as a standard gauge for height adjustment. When adjusting the height, align this mark at 1 $^{1}/_{4}$" (32 mm) above the floor.

■ Place a marking-out level over the installation aids ⑤ on the door.

■ Unscrew the height-adjustable feet until the mark on the base has reached the indicated guide dimension 1 $^{1}/_{4}$" (32 mm).

It is very important to comply with this dimension for the subsequent alignment of the custom door fronts.

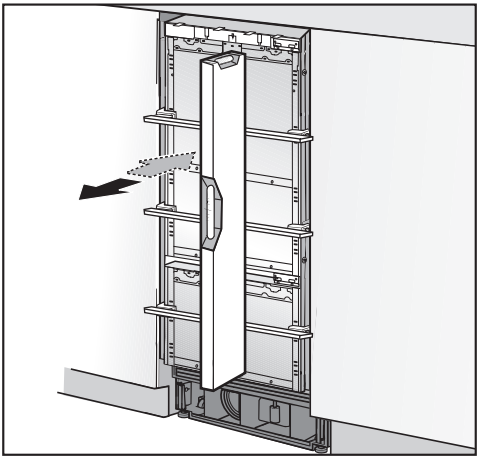

■ Align the custom doors with a level.

Note:

- Do not twist or jam the appliance inside the niche. When unscrewing the height-adjustable feet, proceed gradually, alternating between left and right.
- The adjustment of the rear feet is aided if the appliance is lifted at the rear (tipped forward slightly).
- If using a wooden beam as an alternative anti-tip device, rotate the appliance all the way toward the wooden beam.
- Do not use a power tool to adjust the rear feet!

Attaching the appliance to the installation niche

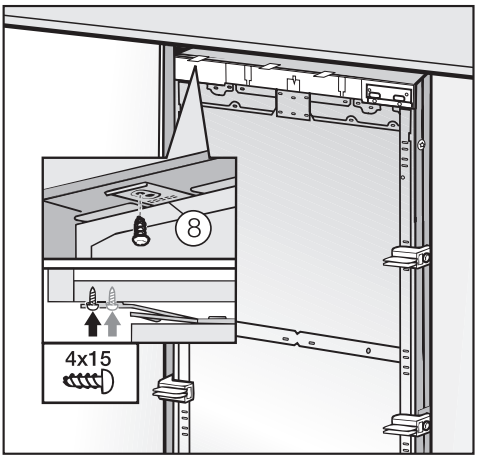

■ Screw the attachment plate lugs ⑧ to the overhead furniture/fixtures.

If there is no way to attach the top of the appliance, it can be attached to the sides of the installation niche.

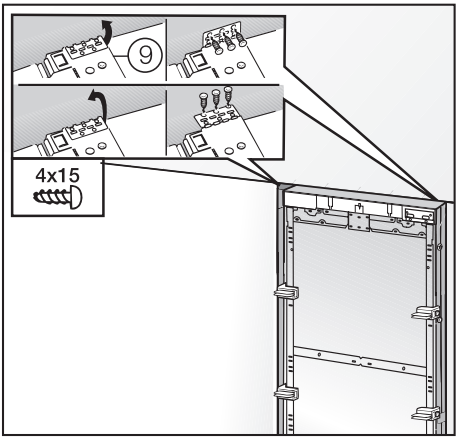

■ Pull out the plate side lugs ⑨.

■ Secure the attachment plate side lugs.

If there is a fairly large gap above the appliance, cut a wooden beam to fit exactly and place it in the gap.

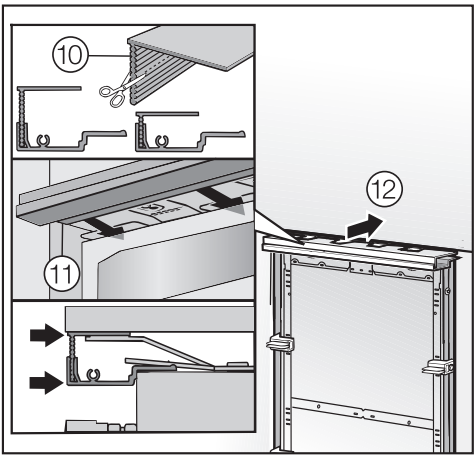

- If necessary, shorten the filler strip ⑩ to the required height.
- Place the 2 strips on top of each other ⑪.
- Insert the filler strip until you hear it click into place ⑫.

For a side-by-side combination the filler strips from both appliances are put together to form one long filler strip:

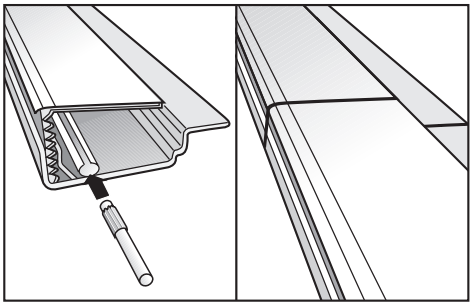

- Take the peg from the "side-by-side merging kit" and insert it halfway into the filler strip rail on the left-side appliance.
- Place the second filler strip on the peg and press both filler strips together.
- Insert both filler strips into the installation space above the appliance, until they click into place.

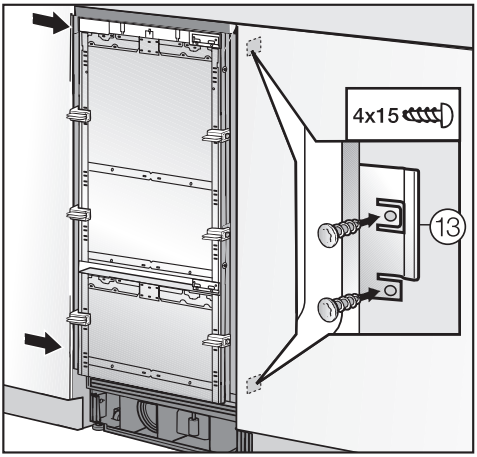

- Open both appliance doors and remove the large freezer basket from the freezer zone.

- Screw the attachment plate lugs ⑬ to the adjacent furniture/fixtures.

With side-by-side combinations, only the external side of the appliances can be secured to the niche.

Now connect the water supply to the appliance (see "Plumbing").

Preparing the custom door

For best results, it is important to mount the upper door **before** the lower door.

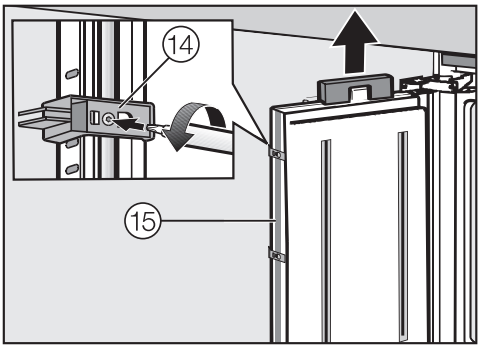

- Open the appliance door.
- Unscrew the installation supports ⑭ from the appliance door.
- Loosen the remaining screws from the strips ⑮ on each side of the door, then remove.
- Set aside the screws and side strips ⑮ - you will need them again later.
- Remove the light switch cover (see arrow).

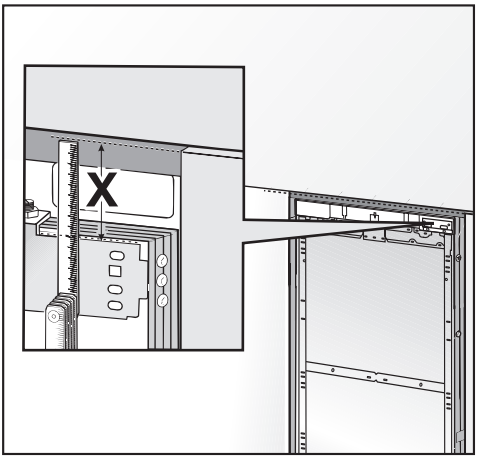

- Measure the distance **X** between the bracket from the upper door and the overhead furniture/fixtures.
- Loosen the two nuts.
  Set aside the nuts - you will need them again later.
- With the inside facing up, lay the custom door on a stable surface (to avoid scratch marks, place some plastic or a cloth on the surface).

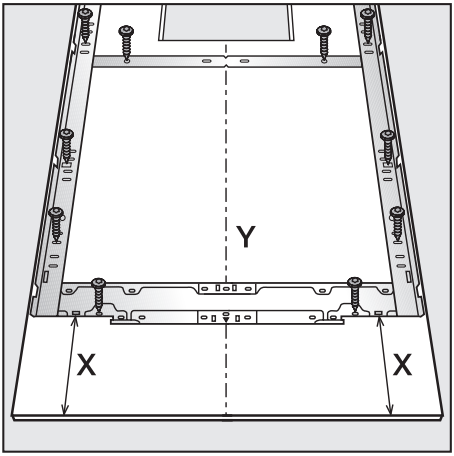

- Mark the distance **X** on the back-side of the custom door.
- Also calculate and mark the center of the custom door **Y**.
- Remove the mounting frame from the appliance door and position it according to the markings on the custom door.
- Pre-drill the holes.
- Tightly screw on the bracket using the pre-drilled holes:
  Attach the bracket to each attachment point with at least one screw.

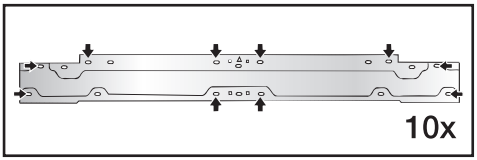

- Attach the bracket at the top with at least 10 screws.

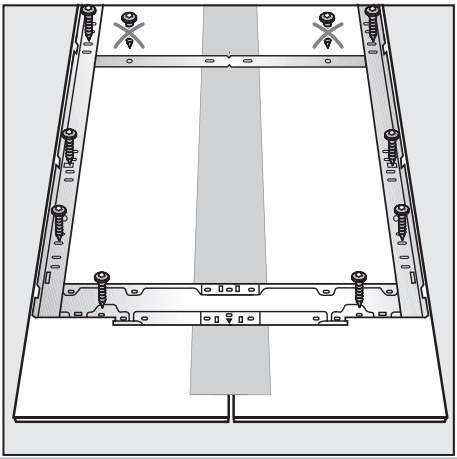

Please note: When attaching the mounting frame onto two adjacent doors (see "Front panel gap kit") screw into the thicker outer frames of the doors **only**.

The bracket includes a variety of holes for the various design options of custom doors.

When performing work on the custom door, always observe the following:

– Always select the best load-bearing surface of the custom door as the location for screws.

– Always select a screw length that is shorter than the thickness of the door front.

Attaching and aligning the custom door front

■ Fit the door handle to the custom door.
Note that the screws are applied from the reverse side.

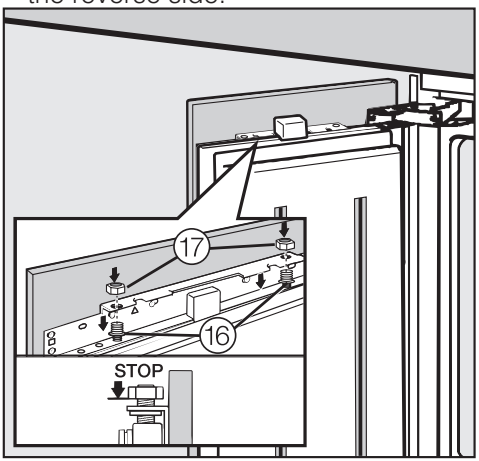

■ Open the door and hang the custom door with the adjusting rail over the double-threaded bolts ⑯.

■ Screw the nuts ⑰ a few turns onto the double-threaded bolts. **Do not** tighten completely.

■ Close the door.

■ Adjust the custom door to adjacent furniture/fixtures.

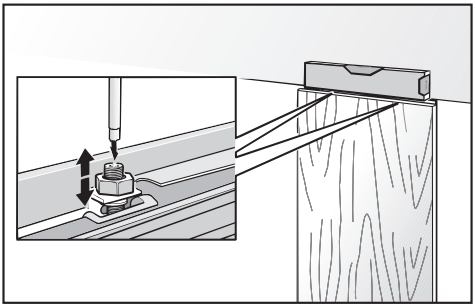

- Align the custom door with the double-threaded bolts.
- Tighten the nuts on the adjusting rail. This will correct the side alignment of the door.

- Put the side strips ⑮ back into place and screw them completely down on both sides of the appliance door. Bag E contains spare screws for this purpose.
- Align the custom door again as needed and tighten all screws on the sides.

To mount the custom door on the lower appliance door, simply repeat the steps under "Preparing the custom door".

- The position of the lower furniture door depends on the position of the upper door.

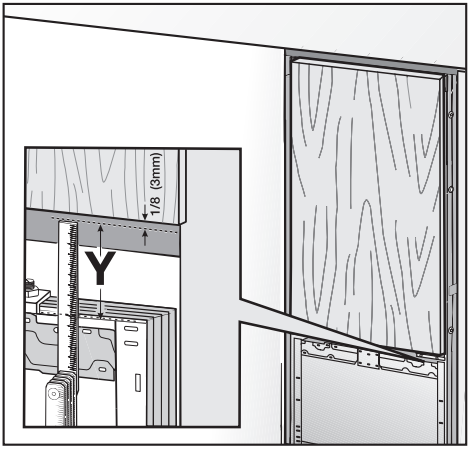

- Measure the distance **Y** between the adjusting rail from the lower door and the upper door.
- Be sure to leave a distance of 1/8" (3 mm) from the upper cabinetry door.

Attaching the lower bracket

(Only for appliances using the "Front panel gap kit".)

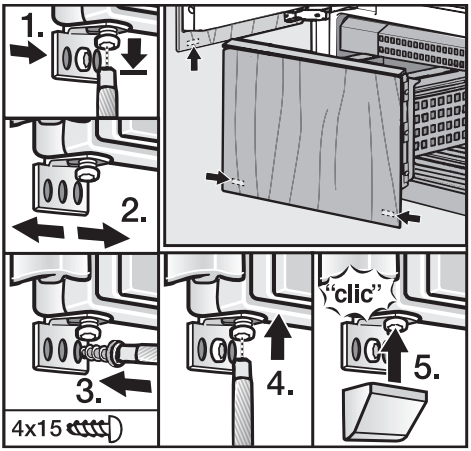

- Open the lower appliance door.

- Screw on the lower brackets. Pre-drill the holes in the custom door.

The lower bracket corrects the side position of the door.

- Loosen the screw.
- Check the side position of the door.
- Thread the wood screw.
- Tighten the screw.
- Place the cover on the brackets.

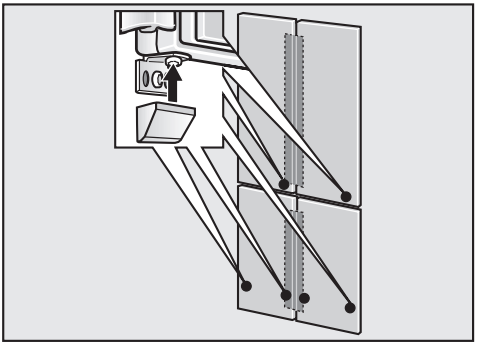

The number of lower brackets will depend on the width and design of the custom door.

Attaching the covers

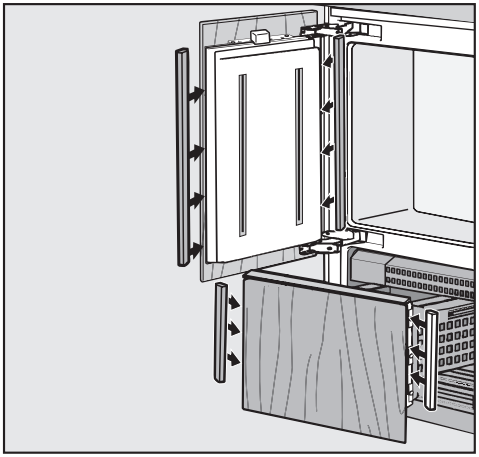

- To mount the cover strips on both sides of the upper and lower doors, click them into place from bottom to top, into the gap between the appliance door and the custom door.

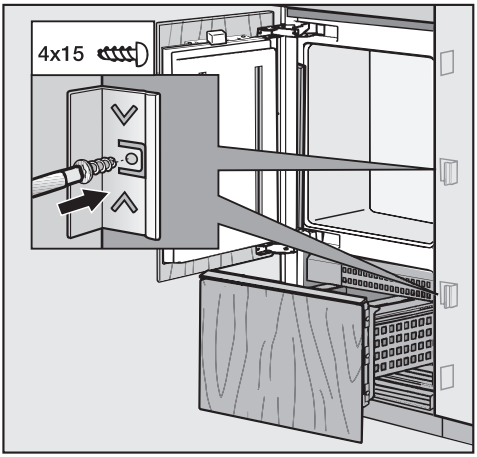

- Screw the brackets onto both sides of the appliance, to hold the cover strip.

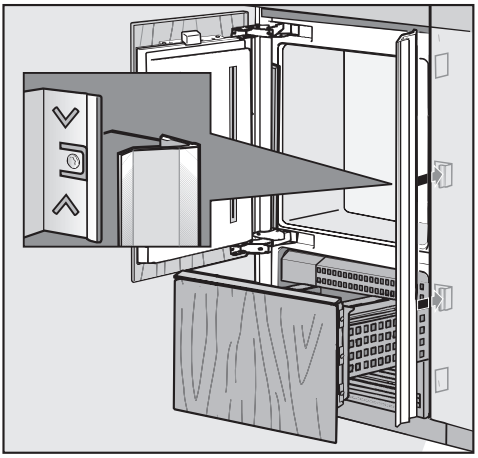

- Insert the cover strip into the space between the appliance and the side panel.
  For side-by-side combinations, the cover strips (on both sides of the appliance) are applied to the outermost spaces only.

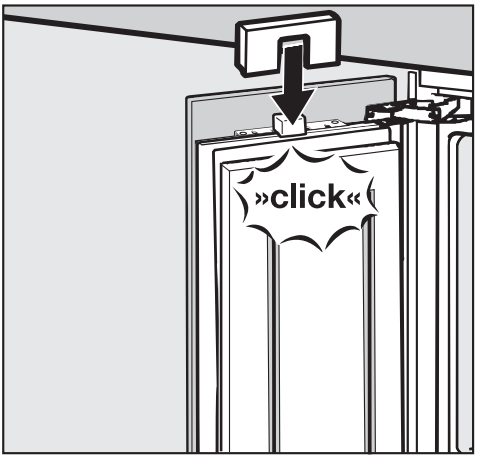

- Attach the light switch cover.

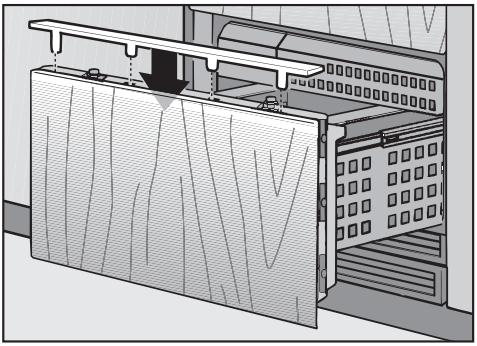

■ Insert the cover plate on the freezer compartment door.

Attaching the toe-kick cover

The maximum height of the toe-kick cover is 4" (101 mm) from the top of the floor. Do not cover the ventilation slits in the plinth. Risk of damage to the appliance.

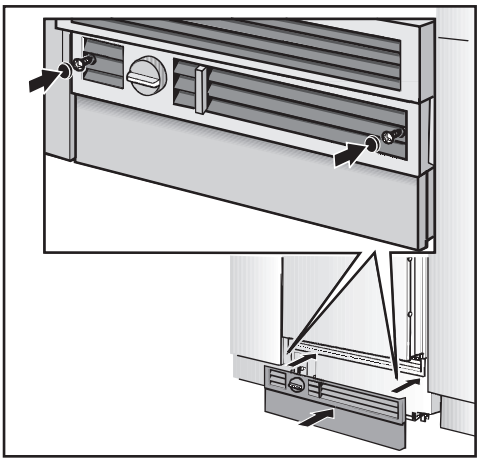

■ If required, cut the toe-kick cover to the required length and height.

■ Attach the plinth to the appliance.

■ Put the included cover plates in place.

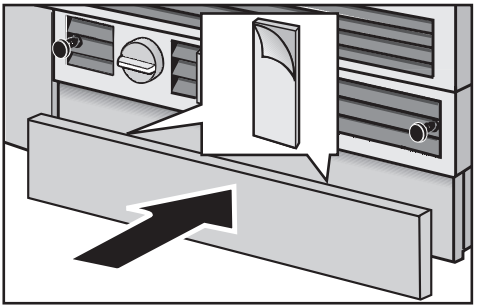

■ Remove the foil from the adhesive strips.

■ Attach the toe-kick cover to the plinth.

Mounting the air separator

The air separator keeps the supply and exhaust air separate. This prevents warm exhaust air from flowing into the machine, optimizing the energy performance of the unit.

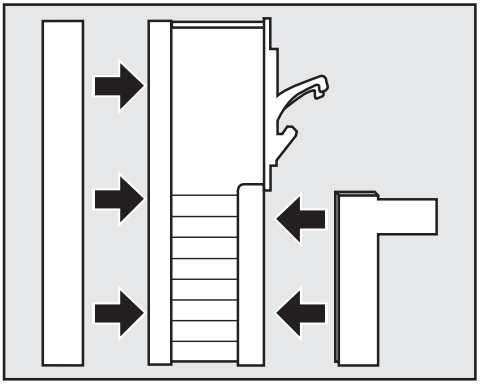

- If necessary, shorten the three parts of the air separator.
- Insert the foam pieces back into the sides.

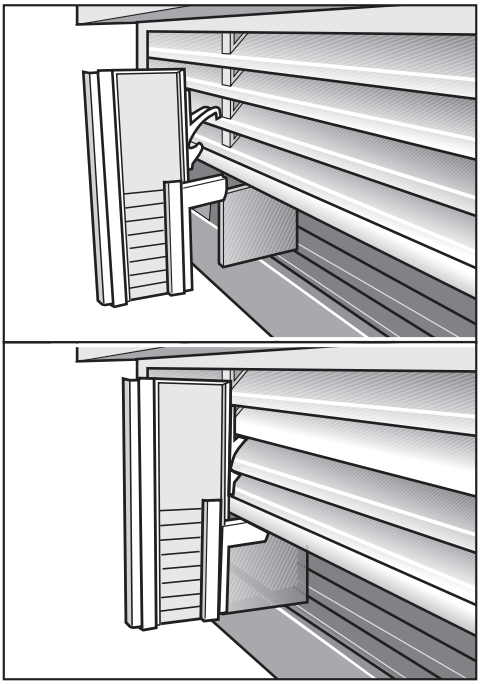

- Clip the air separator, left and right of the partition, in the exhaust grille. Be sure that it clicks into place and guides the foam partition under the exhaust grille.

Plumbing

All plumbing work should be carried out by a suitably qualified and competent person, in accordance with all applicable local and national regulations.

The water quality must conform to country requirements for drinking water.

- The appliance is only suitable for connection to the cold water supply.
- The water pressure must be between 25 and 120 psi (1.72-8.25 bar).
- A separate shut-off valve must be installed, so that the water supply can be interrupted as needed.
- The maximum outer diameter of the water pipe (without fittings): $^{3}/_{8}$" (10 mm).

The shut-off valve for the water connection must not be located behind the appliance. It is recommended to place the shut-off valve directly next to the appliance (base unit) or in another easily accessible location.

Preparing the water connection

The connection to the household water supply must be installed before the appliance is installed.

- Turn off the main water valve to prevent damage caused by leaking water.
- Attach the connecting pipe to the shut-off valve, according to the instructions supplied by the manufacturer of the ice cube maker installation kit.
- Install the connecting pipe. Always observe the indicated clearance dimensions to prevent damage to the connecting pipe when pushing in the appliance.

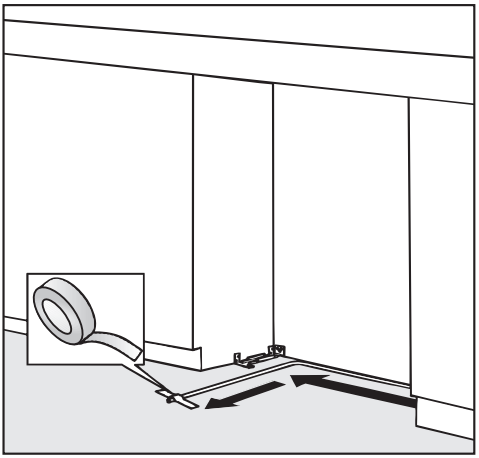

- Secure the connecting pipe to the floor with adhesive tape.
- You may now proceed to install the appliance. See "Installing the appliance".

Connecting the water supply

When connecting the water pipe to the solenoid valve of the appliance, follow the instructions supplied by the manufacturer of the ice cube maker installation kit.

When bending the water pipe, be sure not to kink it, otherwise there is a risk of leaks and water damage.
Use bending aids.

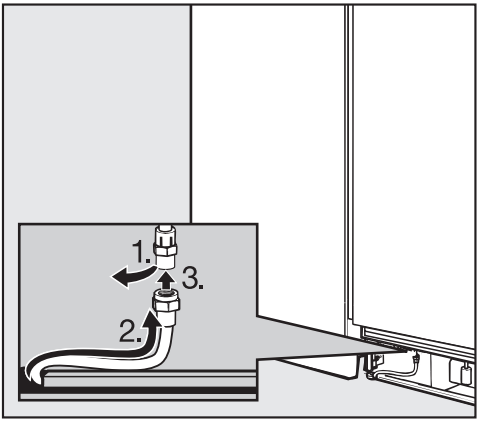

- Remove the cap from the appliance connection, **1**.
- Bend the water pipe to suit the location of the connection on the appliance, **2**.
- Push the union nut and seal onto the water pipe.
- Push the end of the water pipe into the appliance connection and screw on the union nut, **3**. First tighten by hand.
- Then use an open-ended wrench to tighten the union nut. Do not over tighten.
- Open the shut-off valve and the main water connection. Check for leaks at the connection for the shut-off valve and to the appliance.
- Switch the appliance on.

After a maximum of 10 hours the first ice cubes will drop out of the ice cube maker and collect in the drawer.

⚠ Avoid the risk of electrical shock
- Plug into a grounded 3-prong outlet.
- Do not move the ground plug.
- Do not use an adapter.
- Do not use an extension cord.

Failure to follow these instructions can result in death, fire, or electrical shock.

Improper connection of the equipment grounding conductor may result in electric shock. If you are in any doubt as to whether the appliance has been properly grounded, have the appliance checked by a qualified electrician or service technician.

Installation, repairs and other work by unqualified persons could be dangerous.

Before installing the appliance, verify that the voltage, load and circuit rating information found on the data plate match the household electrical supply.

If there are any questions regarding the electrical connection of this appliance to the power supply, please consult a licensed electrician or call the Miele Technical Service.

USA 1-800-999-1360

CDN 1-800-565-6435

The appliance comes with a UL-listed, 3-wire power supply cord.

The appliance requires a 3-wire receptacle.

The receptacle must be installed by a licensed electrician only.

In the case of side-by-side installations, a separate outlet must be used for each appliance. Ideally, the power outlet should be next to the appliance and easily accessible. Do not connect the appliance to the power supply by an extension cord. Extension cords do not guarantee the required safety of the appliance (danger of overheating).

If any changes are needed to the household wiring or power supply, this work must be performed by a qualified electrician.

RemoteVision

Miele's RemoteVision Wi-Fi technology creates a 'virtual link' between your appliance and our monitoring center. If a fault occurs, Miele's client service center will be notified and contact you, or another trusted individual identified on your call roster, in order to gain access to your appliance to fix the problem.

For information on set-up and installation of the RemoteVision module see the "Installation" section of this manual.

Be sure your wireless system meets the following requirements

- A wireless router that supports an IEEE 802.11b protocol
- Windows XP® or newer operating system, Mac® OS X 10.3 or higher
- Cable or DSL modem
- Microsoft® Internet Explorer 6 or higher, Safari 2.0 or higher, Firefox 1.5 or higher

* Please note that each wireless router manufacturer supplies their own device drivers and setup programs. Due to the differences in manufacturers, exact router setup instructions are not included in this manual. Wording and instructions may vary.

Accessing the RemoteVision control panel

- Touch the access button "🌡" so it turns yellow.

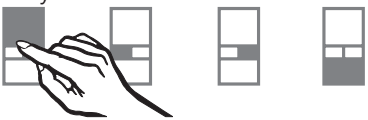

- Touch the sensor button for the refrigerator section so it turns yellow.
- Note the position of the ∨ button, but do not touch.
- Touch the access button "🌡" again so it turns white.

Only the access button "🌡" is visible.

- Place one finger on the position of the ∨ button and hold (the ∨ button will not be visible).
- While holding down the ∨ button, press the access button "🌡" once. Keep holding the ∨ button down until the following appears in the display (approx. 5 seconds).

Access to the Custom settings mode is now active for approximately 10 seconds.

- Tap the ∨ button until r appears in the display.
- Touch the access button "🌡" to confirm.

See the table on the following page for a description of each setting in the display.

- Use the ∧ or ∨ buttons to select the RemoteVision options.

> The module has been connected to the network when r 3 appears in the display.
> If r 3 does not appear, refer to the "Network options" section of the XKM 2000 Installation Instruction manual.

- Press and hold the access button "🌡" for 2 seconds to confirm the change.
- To return to the main menu, tap the ∨ button until a solid r - appears in the display.
- Press the access button "🌡" to confirm.
- Tap the ∨ button until a c appears in the display.
- Touch the access button "🌡".

You have left the Custom settings mode.

> When you are in the Custom settings mode the door alarm is turned off automatically. Once the door is closed it is reactivated.

MasterCool control panel options for RemoteVision

Status indicators	Description of function
Flashing r _	Module booting phase
Flashing r ¯	Not connected to network
Flashing r =	Connection to network established, no IP address assigned
Solid r ≡	Connected to network
Flashing r =	In Ad-Hoc Mode, not connected
Flashing r ¯	In Ad-Hoc Mode, connected

Selectable options	Description of function
r -	Back
r 2	Reboot the module
r 3	Reset to factory settings
r 4	Enter Ad-Hoc Mode

Note: If you cannot select any option (other than r - "Back", the module has not been installed correctly.

Please have the model and serial number of your appliance available before contacting Technical Service.

U.S.A.
Miele, Inc.

National Headquarters
9 Independence Way
Princeton, NJ 08540
Phone: 800-843-7231
609-419-9898
Fax: 609-419-4298
www.miele.com

Technical Service & Support Nationwide
Phone: 800-999-1360
Fax: 888-586-8056

TechnicalService@mieleusa.com

Canada
Miele Limited

Headquarters and Showroom
161 Four Valley Drive
Vaughan, ON L4K 4V8
Phone: 800-643-5381
905-660-9936
Fax: 905-532-2290
www.miele.ca
info@miele.ca (general enquiries)
professional@miele.ca (commercial enquiries)

MieleCare National Service
Phone: 800-565-6435
905-532-2272
Fax: 905-532-2292
customercare@miele.ca (technical enquiries)

Alteration rights reserved / 2109

M.-Nr. 07 155 800 / 08

For the most updated manual see the Miele web site.