KALLISTA®

Barbara Barry Toilet

P70071, P70072
Combination P70070

CODES/STANDARDS APPLICABLE

Specified Model Meets or Exceeds the Following:

- *ASME/ANSI A112.19.2M*
- *ASME/ANSI A112.19.6M*
- *Energy Policy Act of 1992 (EPACT)*

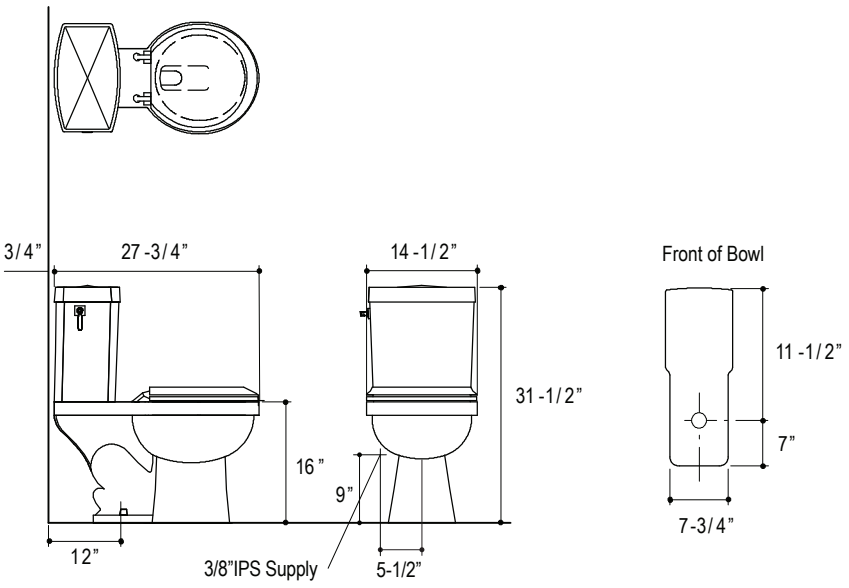

PRODUCT INFORMATION	
Gallons Per Flush	1.6 Gallons
Passageway	2"
Seat Post Hole Centers	5-1/2"
Waterspot	4" x 6"
Gravity Fed Rim Flush	

ROUGHING-IN NOTES
All Dimensions are Nominal.

SPECIFIED MODEL				
Model	Description	Finishes		
P70072-00	Barbara Barry Round Bowl	☐ 0 Stucco White	☐ 96 Linen	
P70071-00	Barbara Barry Tank	☐ 0 Stucco White	☐ 96 Linen	
Required Accessory (Pick One)				
P70074-CP	Barbara Barry Toilet Seat w/Chrome Hinges, Round	☐ 0 Stucco White	☐ 96 Linen	☐ EB Ebony
P70074-AD	Barbara Barry Toilet Seat w/Nickel Silver Hinges, Round	☐ 0 Stucco White	☐ 96 Linen	☐ EB Ebony
P70074-AG	Barbara Barry Toilet Seat w/Brushed Nickel Hinges, Round	☐ 0 Stucco White	☐ 96 Linen	☐ EB Ebony
P70075-CP	Barbara Barry Toilet Seat w/ Chrome Hinges, Round	☐ JV Java	☐ WH White Wood	
P70075-AD	Barbara Barry Toilet Seat w/ Chrome Hinges, Round	☐ JV Java	☐ WH White Wood	
P70075-AG	Barbara Barry Toilet Seat w/ Chrome Hinges, Round	☐ JV Java	☐ WH White Wood	
Optional Accessory				
P70073-HA	Trip Lever, Upgrade	☐ CP Polished Chrome	☐ AD Nickel Silver	☐ AG Brushed Nickel

We reserve the right to make revisions without notice in the design of products or in packaging unless this right has specifically been waived at the time the order is accepted.

Questions? Problems? For additional assistance, please contact Kallista's Customer Service Department at 1-888-4KALLISTA (1-888-452-5547) or FAX 1-888-272-3094.