VG 232 214CA
Stainless steel control panel
Natural gas
Width 12" (29 cm)

Installation accessories
VV 200 014
Connecting strip for combination with other Vario cooktops

Optional accessories
VD 201 014
Brushed stainless steel appliance cover

200 series Vario gas cooktop
VG 232

Equipped for natural gas. Jets supplied for conversion to LP gas.

- Special appliance for restaurant-grade capabilities in the home kitchen.
- Generous control panel for comfortable and secure operation.
- Electric ignition of all burners. Simply press the knob, turn it and hold it there until a stable flame burns.

Cooking zones
2 gas burners suitable for pots up to max. ø 8 11/16": One high-output burner (9,500 BTU). One standard burner (6,500 BTU).

Features
Brushed stainless steel cooktop.
Electric ignition.
Cast-iron pan support, also suitable for small pots.
Enameled burner cap.

Safety
All-gas valve with fine control and thermoelectric safety pilot.

Planning notes
Maximum drawer depth 16 9/16".
Appliance clicks into place when inserted in the countertop from above.
A minimum clearance of 5 7/8" from adjacent heat-sensitive furniture or contact surfaces must be observed or thermal insulation must be installed.
The gas cooktop is equipped with a connecting cable and a shock-proof plug (55").

Rating
Total rating: 16,000 BTU
Total Amps: 1
120V / 60Hz

Gas connection

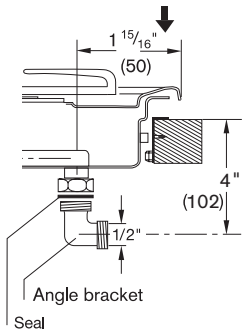

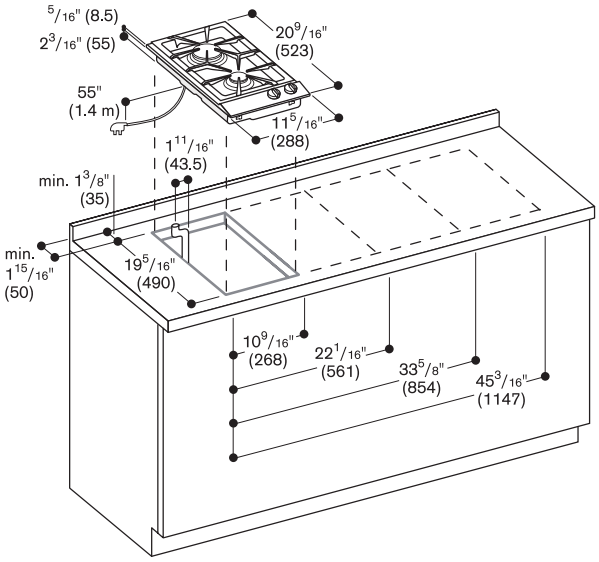

Numbers indicated inside parenthesis ( ) = mm