Job Name:

Type:

New Age Series

NAS-PS

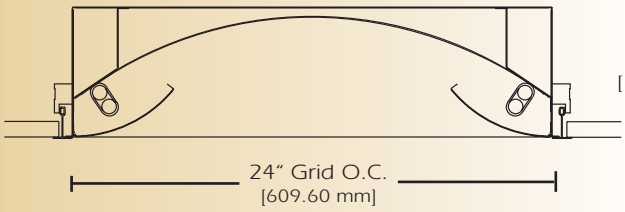

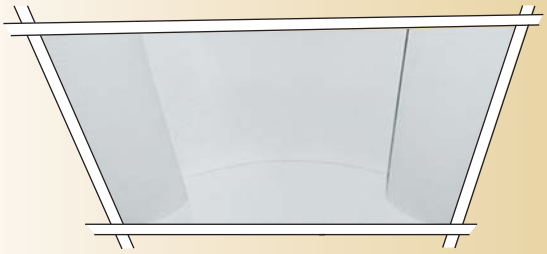

TYPE _____

FEATURES

The NAS-PS is one variation of a complete group of Recessed Direct luminaires featuring two side metal perforated lamp shields with an acrylic overlay to obscure direct lamp image. The two side perforated lamp shields are positioned above the ceiling plane. Lamp output is distributed over a computer designed reflector system to provide soft glare-free illumination. The NAS-PS series can be used in any installation where high performance and comfortable lighting are required.

SPECIFICATIONS

Housing: Die formed 20-gauge cold rolled steel finished in baked white enamel. Housing has an access plate on top with two 7/8" diameter knockouts.

Shielding: Die formed 20 gauge perforated steel lamp shields has a 41% opening with white acrylic .020 translucent overlay. The hinged lamp shield is removable for easy lamp access.

Reflector: Die formed .020 aluminum 90% minimum reflectivity finished in low glare matte baked white enamel.

Electrical: Ballast is electronic, high power factor, thermally protected class P, sound rated A, with less than 20% total harmonic distortion. The minimum number of ballasts will be used unless otherwise specified.

Mounting: Standard installation is 2 x 2 exposed inverted T-bar ceiling. Optional trims are also available for installations in miniature grid, drywall or plaster ceiling. For mounting detail information consult factory. Four support brackets are included with each fixture.

Finish: Fixture housing and steel components are finished in baked white enamel applied over a five-stage pretreatment process.

Lamps: Fixtures are provided for use with 40 or 50 watt compact fluorescent, or 17 watt T8 lamps. (Supplied by Others)

Certification: Luminaires are U. L. Listed, C.S.A. certified and are Union Made in the United States of America I.B.E.W.

ORDERING GUIDE

MODEL NO.		LAMPS		SIZE		MOUNTING		FINISH		VOLTAGE		OPTIONS
NAS-PS	-		-	**22**	—		—	CC	—		—	
NAS-PS		**240-CF** **250-CF** **217-T8** **O**=Other Specify		**22**= 2X2		**G**= Standard Lay-in Grid **MG**= Miniature Grid **F**= Flanged		**W**= White **CC**= Custom Color		**120v** **277v**		**See Options Below**

Example: **NAS-PS-240CF-22-G-W-120V**

New Age Series with two perforated lamp shields two 40 watt compact fluorescent 2x2 grid fixture finished in baked white enamel 120 volt electronic ballast less than 20% harmonics.

OPTIONS

E10= Electronic ballast, high power factor, thermally protected class P, sound rated A, <10% total harmonic distortion
DIM= Dimming Ballast
EPC= Emergency Battery Pack
EMC= Emergency Circuit
DCW= Dual Circuit Wiring
ARS= Air return system
FWH= Flexible wiring harness
OTH= See Accessory Section for other options available

126 Chestnut Street, Warwick RI 02888
t. (401) 467-8232 / f. (401) 941-2960 / e. sales@dayolite.com
www.dayolite.com

DAY-O-LITE
FLUORESCENT FIXTURES
DIVISION OF SCW CORPORATION

New Age Series

NAS-PS

LINEAR SECTIONS AND SUSPENSION LOCATION

MOUNTING "G"

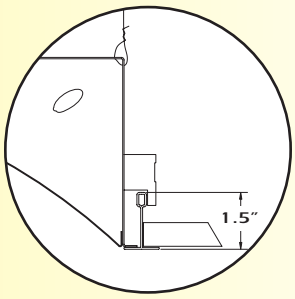

STD. 1 1/2" INVERTED "T" BAR

MOUNTING "MG"

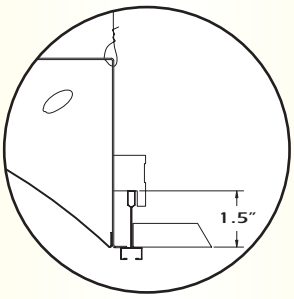

1 1/2" MINIATURE GRID CEILING

MOUNTING "F"

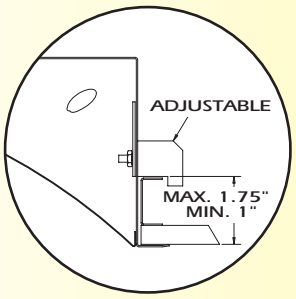

PLASTER OR DRY WALL CEILING

INSTALLATION PREPARATION

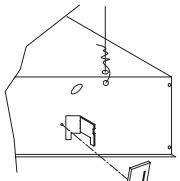

SIDE ELEVATION DETAIL (SEE MOUNTING "G")

CLOSURE PLATE

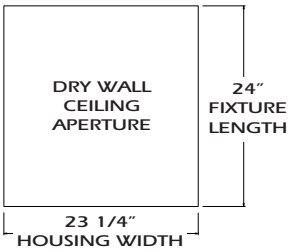

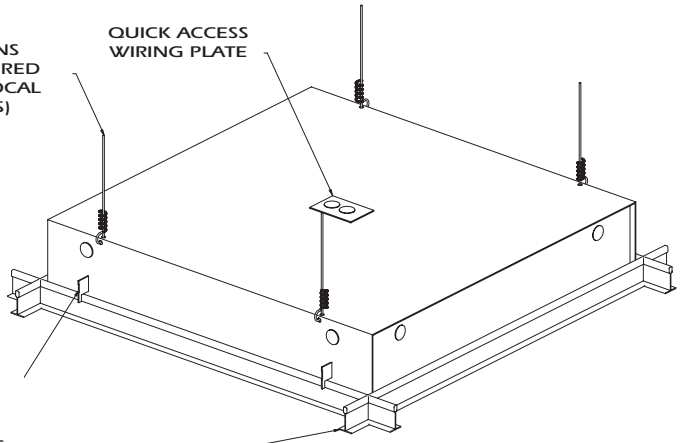

PHOTOMETRY

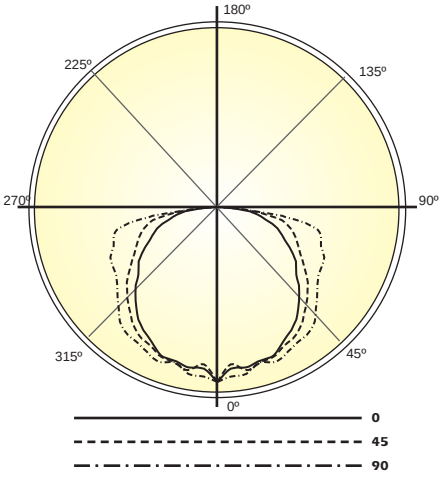

LAMP (2) 40W C.F.
LUMENS: 3150 PER LAMP

Candela Distribution:

Vert. Angle	0	22.5	45	67.5	90
0	902	902	902	902	902
5	813	819	828	862	847
10	868	832	856	845	910
15	813	836	811	849	822
20	810	824	825	848	852
25	784	775	801	832	826
30	746	752	782	815	806
35	708	722	753	786	817
40	658	659	703	763	784
45	582	612	671	697	729
50	521	561	601	662	689
55	494	505	547	616	650
60	432	453	489	583	633
65	367	396	453	557	626
70	332	348	424	528	582
75	258	294	370	502	572
80	193	224	307	414	470
85	109	113	135	152	163
90	21	25.7	26.5	32.8	35.8

Optical Distribution:
100% Direct

Coefficients of Utilization - Zonal Cavity Method:

pfc = 0.20

pcc	.8				.7				.5			.3			.1			0
pw	.7	.5	.3	.1	.7	.5	.3	.1	.5	.3	.1	.5	.3	.1	.5	.3	.1	0
RCR																		
0	60	60	60	60	59	59	59	59	56	56	56	54	54	54	52	52	52	50
1	54	51	48	46	52	50	47	45	47	45	43	45	44	42	43	42	41	40
2	48	43	39	36	47	42	38	35	40	37	34	39	36	33	37	35	33	31
3	43	37	32	29	42	36	32	28	35	31	28	33	30	27	32	29	27	26
4	39	33	28	24	38	32	27	24	31	26	23	29	26	23	28	25	23	21
5	36	29	24	20	35	28	23	20	27	23	20	26	22	19	25	22	19	18
6	33	26	21	17	32	25	21	17	24	20	17	23	20	17	23	19	17	15
7	31	23	18	15	30	23	18	15	22	18	15	21	17	15	20	17	15	13
8	28	21	16	13	28	21	16	13	20	16	13	19	16	13	19	15	13	12
9	26	19	15	12	26	19	15	12	18	14	12	18	14	12	17	14	12	11
10	25	18	13	11	24	17	13	11	17	13	10	16	13	10	16	13	10	9

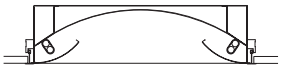

Total Luminaire Optical Efficiency = 51.2%

SCW-2

126 Chestnut Street, Warwick RI 02888
t. (401) 467-8232 / f. (401) 941-2960 / e. sales@dayolite.com
www.dayolite.com

DAY-O-LITE
FLUORESCENT FIXTURES
DIVISION OF SCW CORPORATION