Prices effective September 6, 2011

Published March 2012

HermanMiller Collection

Introduction	**page 2**
HermanMiller Collection	
Seating	3
Side and Stacking Chairs	5
Lounge Seating	35
Stools	63
Benches	75
Work Chairs	79
Sofas	88
Desks and Tables	101
Desks	103
Tables	105
Occasional Tables	163
Storage	179
Accessories	197
Outdoor Furniture	201
Seating	203
Tables	220
Indices	**231**
By Name	231
By Number	233
Appendices	
To view and/or print price book appendices, select the appropriate price book from HermanMiller.com.	

PB_HCL

Introduction

A Note on the Organization of This Book

There are a few signals that will help you understand the organization of this book. Once you know them, you should be able to find your way around easily.

Like a newspaper, this book is formatted with columns of text and illustrations that run vertically.

Information wraps from one column to the next and continues for as many pages as it needs to.

Black bars are clues.

A black bar at the top of a page signals the start of information about a product.

This information is divided into two sections, each signaled by a black bar. Product Information includes a description, additional notes, and dimensional drawings. Specification Information, which always begins at the top of a column, includes a series of steps. Each step represents a decision you need to make in order to complete your product number. Steps must be followed sequentially. The number of pages needed to complete information on a product varies; some will be complete in one page; others may fill three or four pages. Just continue going through the steps until you run into the next product, signaled by the black bar at the top of the page.

Black tabs running along the outside edge of the page help you locate what section you are in or what section you want to go to. You can thumb forwards or backwards to find a section; tabs and text appear on both sides of the page.

The additional pages in the back of the book include the appendices and indices. They are signaled by a long black bar running along the outside edge of the page.

The index is presented two ways.

The first index is in alphabetical order by product name. It can be helpful if you are new to the products and numbering scheme or if you are looking for a type of product, such as work chair or round table. The second index is by product number. It lists, in alphanumeric order, the base product number, typically a five-digit number.

General Information

This book is effective September 6, 2011, subject to change without notice. Products may be purchased from authorized Herman Miller dealers who will quote prices upon request. For more information about our products and services or to see a list of dealers, visit www.HermanMiller.com.

All prices are list prices. Additional services, such as planning services, design, storage, and installation, are not included and must be added to these prices when the additional services are requested.

Illustrations, specifications, and prices are based on the latest information at the time of publication. The right is reserved to make changes at any time without notice in prices, fabrics, finishes, materials, specifications, and models, and also to discontinue models and finishes.

Dimensions shown in the drawings are engineering drawing dimensions rounded up to the nearest 1/8". Product is shipped set up or knocked down. Products that include "Shipped knocked down" in the description require some assembly. If this statement does not appear in the description, the product is shipped assembled.

Service problems are normally handled by a Herman Miller authorized dealer. Where this cannot be accomplished on a local level, service problems should be referred to the Customer Care Representative for your region, Herman Miller, Inc., Zeeland, Michigan 49464.

20-Day or Less/Assigned Lead-Time Shipments

All products and options in this price book not designated by an Assigned Program icon [A] will ship in **20 business days or less** after being acknowledged by Herman Miller.

Products and options designated by an [A] are on the assigned lead-time program and may ship in 20 days, less than 20 days, or more than 20 days from order acknowledgement.

Side & Stacking Chairs

Lounge Seating

Stools

Benches

Work Chairs

Sofas

Eames® Aluminum Group Side Chair

EA306
EA308

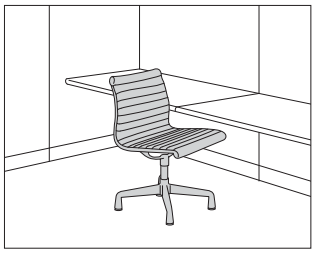

Product Information

Description

This low-back chair has a lightweight aluminum frame with suspended upholstery. It has a 4-star base with 1/2" (GD) glides for hard floors or carpet and fixed seat height. The chair is available with or without a swivel mechanism.

Notes

Chair is tested and warranted for use by persons 300 pounds and under.

When chair is specified with Cygnus™ mesh, it meets CAL 133 requirements.

For description of glide, see Casters and Glides in Appendices.

Customer's Own Material (COM) requires 1 1/3 yards. Customer's Own Leather (COL) requires 45 square feet. See Order Information in Appendices.

Dimensions

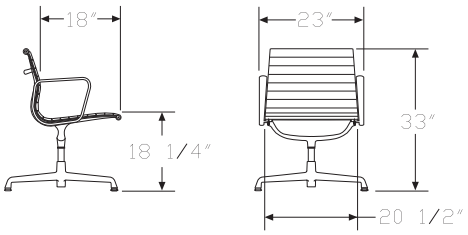

Specification Information

Step 1.

EA30 A

Step 2. Arms

6	no arms A	
8	arms A	

Step 3. Swivel

S	swivel base A	
F	fixed base, no swivel A	

Prices for Steps 1-3.

EA306	**S**	$1169
	F	$1245
EA308	**S**	$1535
	F	$1611

Step 4. Base/Frame Finish

91	white A	+$87
G2	graphite satin A	+$69
L	polished aluminum A	+$0

Step 5. Fabric

Price Category 1	+$0
Price Category 2	+$43
Price Category 3	+$81
Price Category 4	+$125
Price Category 7 A	+$180
Price Category 9	+$591
Price Category 11	+$768
Price Category B	+$35
Price Category E	+$85
Price Category F	+$118
Price Category H	+$203
Price Category I	+$252
Price Category K	+$354
Price Category R	+$1287
Price Category V	+$2434

Eames® Soft Pad Side Chair

EA406
EA408

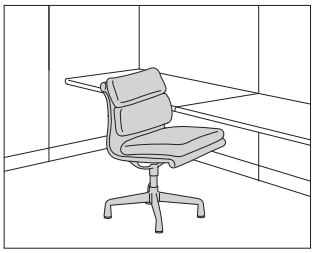

Product Information

Description

This low-back chair has a lightweight aluminum frame and 2"-thick upholstered foam cushions. It has a 4-star base with 1/2" (GD) glides for hard floors or carpet and fixed seat height. The chair is available with or without a swivel mechanism.

Notes

Chair is tested and warranted for use by persons 300 pounds and under.

For description of glides, see Casters and Glides in Appendices.

Customer's Own Material (COM) requires 2 1/2 yards. Customer's Own Leather (COL) requires 45 square feet. See Order Information in Appendices.

Dimensions

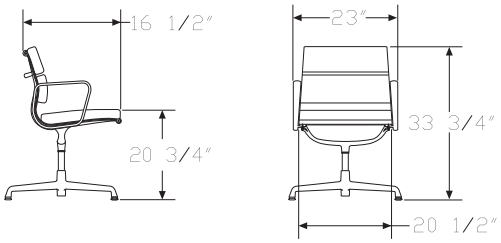

Specification Information

Step 1.

EA40 A

Step 2. Arms

6	no arms A	
8	arms A	

Step 3. Swivel

S	swivel base A	
F	fixed base, no swivel A	

Prices for Steps 1-3.

EA406	**S**	$2115
	F	$2191
EA408	**S**	$2481
	F	$2557

Step 4. Base/Frame Finish

91	white A	+$87
G2	graphite satin A	+$69
L	polished aluminum A	+$0

Step 5. Fabric

Price Category 1 A	+$0
Price Category 2	+$63
Price Category 3	+$138
Price Category 4	+$212
Price Category 7 A	+$288
Price Category 9	+$574
Price Category 11	+$768
Price Category B	+$64
Price Category E	+$159
Price Category F	+$222
Price Category G	+$285
Price Category H	+$380
Price Category I	+$475
Price Category J	+$569
Price Category K	+$664
Price Category L	+$748
Price Category M	+$940
Price Category R	+$1320
Price Category V	+$2434

Eames® Molded Plywood Dining Chair Metal Base

DCM.

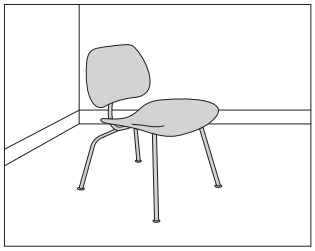

Product Information

Description

This 29½"-high molded plywood chair has natural face veneers, hardwood inner plies, and a 5-ply seat and back. It has a 4-leg base and self-leveling nylon glides. When upholstered, the back and seat shells have exposed veneer on their backside.

Notes

Red stain (11) shell finish is on birch veneer. This stain allows the wood grain to show through; inner plies are visible. Natural variations in wood grain may affect the appearance of this stain color.

Ebony (EN) shell finish is stain on ash veneer; inner plies are not as visible.

Black (BK) base finish has black glides. Trivalent chrome (47) base finish has white glides.

Avoid placement in direct sunlight.

Customer's Own Material (COM) requires 1 yard. Customer's Own Leather (COL), requires 14 square feet. See COM Information in Appendices for additional information.

Dimensions

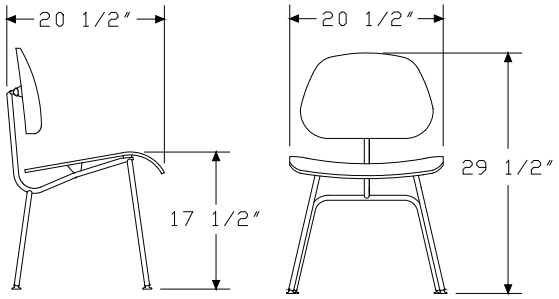

Specification Information

Step 1.

DC A

Step 2. Upholstery

M.	nonupholstered shell A	
M.U	upholstered shell A	

Prices for Steps 1-2.

DCM.	$566
DCM.U	$1209

Step 3. Base Finish

BK	black A	+$0
47	trivalent chrome A	+$20

Step 4. Shell Finish

Wood Veneer

OU	walnut A	+$0
CX	natural cherry A	+$35
11	red stain A	+$115
A2	white ash A	+$115
EN	ebony A	+$115
9N	santos palisander A	+$285

Step 5. Fabric

For upholstered shell (M.U)

Price Category 1 A	+$0
Price Category 2	+$26
Price Category 3	+$50
Price Category 4	+$75
Price Category 7 A	+$175
Price Category 11	+$411
Price Category E	+$105
Price Category F	+$145
Price Category G	+$247
Price Category H	+$277
Price Category I	+$310
Price Category J	+$341
Price Category K	+$375
Price Category L	+$420
Price Category M	+$471

Eames® Molded Plywood Dining Chair Wood Base

DCW.

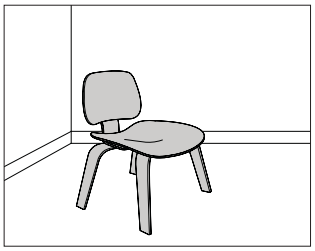

Product Information

Description

This 28¾"-high molded plywood chair has natural face veneers, hardwood inner plies, a 5-ply seat and back, and 8-ply legs. When upholstered, the back and seat shells have exposed veneer on their backside.

Notes

Red stain (11) finish is on birch veneer. This stain allows the wood grain to show through; inner plies are visible. Natural variations in wood grain may affect the appearance of this stain color.

Ebony (EN) shell finish is stain on ash veneer; inner plies are not as visible.

Avoid placement in direct sunlight.

Customer's Own Material (COM) requires 1 yard. Customer's Own Leather (COL), requires 14 square feet. See COM Information in Appendices for additional information.

Dimensions

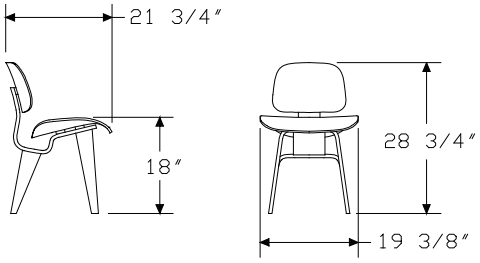

Specification Information

Step 1.

DC A

Step 2. Upholstery

W.	nonupholstered shell A	
W.U	upholstered shell A	

Prices for Steps 1-2.

DCW.	$862
DCW.U	$1505

Step 3. Finish

OU	walnut A	+$0
CX	natural cherry A	+$45
11	red stain A	+$154
A2	white ash A	+$154
EN	ebony A	+$154
9N	santos palisander A	+$575

Step 4. Fabric

For upholstered shell (W.U)

Price Category 1 A	+$0
Price Category 2	+$26
Price Category 3	+$50
Price Category 4	+$75
Price Category 7 A	+$175
Price Category 11	+$411
Price Category E	+$105
Price Category F	+$145
Price Category G	+$247
Price Category H	+$277
Price Category I	+$310
Price Category J	+$341
Price Category K	+$375
Price Category L	+$420
Price Category M	+$471

Eames® Molded Plastic Side Chair

DSR.
DSS.
DSW.
DSX.

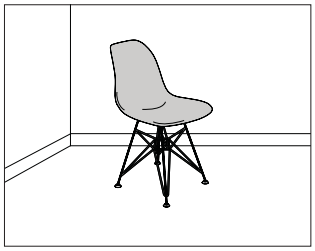

Product Information

Description

This chair has a single-piece shell with waterfall edges and molded seat and flexible back. Base options include a wire base, 4-leg base, a dowel-leg base, or a stacking base which can gang together. The dowel-leg base has non-adjustable nylon glides.

Notes

Ebony (EN) dowel legs are stained ash wood with black glides.

Maple (Z5) and walnut (OU) dowel legs have white glides.

Stacking base chairs can stack up to 14 high. For ease of mobility, two types of dollies are available, but sold separately.

Dimensions

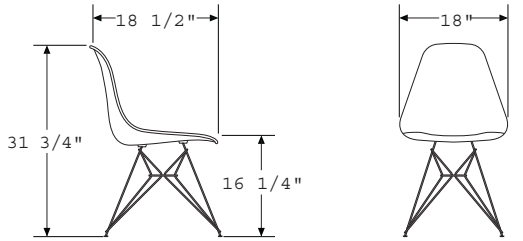

Wire Base

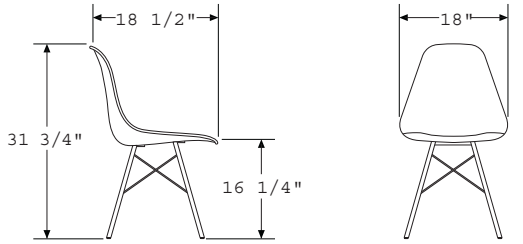

Dowel-Leg Base

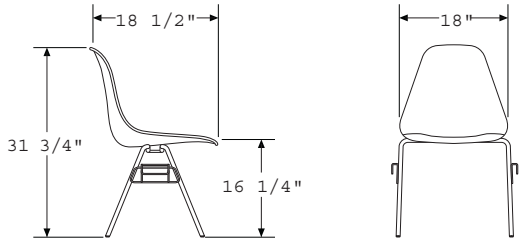

Stacking/Ganging Base

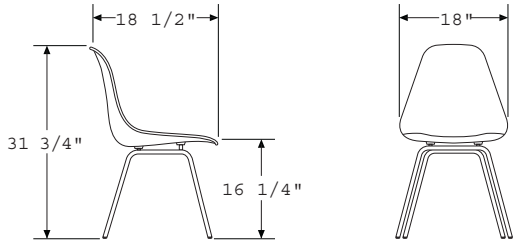

4-Leg Base

Eames® Molded Plastic Side Chair

continued

Specification Information

Step 1.

DS

Step 2. Base Option

R.	wire base
S.	stacking base
W.	dowel base
X.	4-leg base

Prices for Steps 1-2.

DSR.	$299
DSS.	$315
DSW.	$462
DSX.	$327

Step 3. Base Finish

For wire base (R.) or 4-leg base (X.)

47	trivalent chrome A	+$0
BK	black A	+$0

For stacking base (S.)

47	trivalent chrome A	+$0

For dowel base (W.)

BK	black A	+$0

Step 4. Dowel Finish

For dowel base (W.)

Z5	maple	+$0
EN	ebony	+$30
OU	walnut	+$30

Step 5. Seat/Back Finish

4T	aqua sky	+$0
5B	java	+$0
6Y	wafer	+$0
92	greystone	+$0
9J	sparrow	+$0
ZA	black	+$0
ZE	red	+$0
ZF	white	+$0
ZH	light blue	+$0
ZS	lime green	+$0

Step 6. Glide Option

For wire base (R.), stacking base (S.), or 4-leg base (X.)

E8	standard glide	+$0
E9	standard glide with felt bottom	+$0

Eames® Side Chair Stacking Base Dolly

DOLLY.

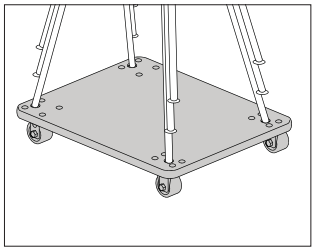

Product Information

Description

This chair dolly stores and transports up to 28 Eames® plastic side chairs with the stacking/ganging base option. It is made of plywood and has 2 locking and 2 non-locking casters.

Notes

Single dolly supports 1 stack of 14 chairs. Double dolly supports 2 stacks of 14 chairs.

Dimensions

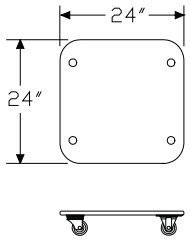

A (Single)

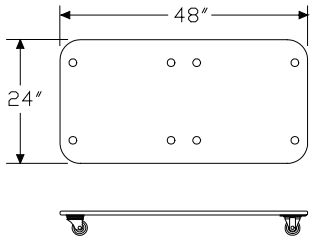

B (Double)

Specification Information

Step 1.

DOLLY.

Step 2. Type

A	single
B	double

Prices for Steps 1-2.

DOLLY.	**A**	$473
	B	$552

Eames® Wire Chair DKR.

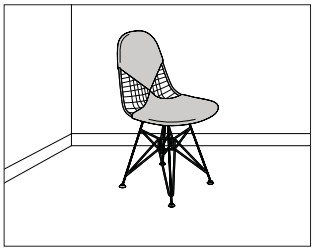

Product Information

Description

This chair has a chrome seat frame and legs. It is available with a wire seat and back, a leather seat and wire back, or a leather seat and partially upholstered leather back.

Dimensions

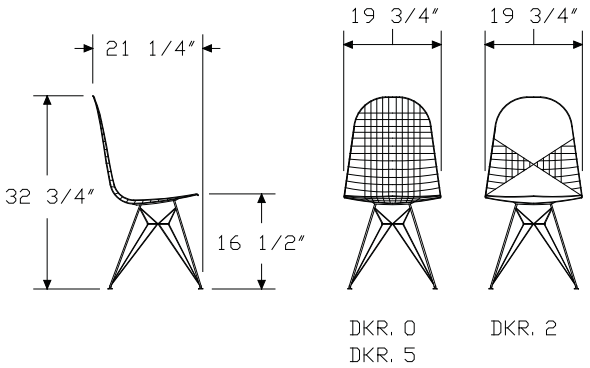

Specification Information

Step 1.

DKR. A

Step 2. Seat/Back Material

0	wire seat/wire back A	
2	leather seat/leather back A	
5	leather seat/wire back A	

Prices for Steps 1-2.

DKR.	**0**	$840
	2	$840
	5	$840

Step 3. Seat Frame/Leg Finish

CH	chrome A	+$10

Step 4. Glide Option

E8	standard glide A	+$0
E9	standard glide with felt bottom A	+$0

Step 5. Leather

See textiles list for fabric usuage and numbers. First 2 digits of number indicate fabric line; remaining digit(s) indicate fabric color.

For leather seat/leather back (2)

Price Category 9	+$995

For leather seat/wire back (5)

Price Category 9	+$409

Eames® Molded Plastic Armchair

DAR.
DAW.
DAX.

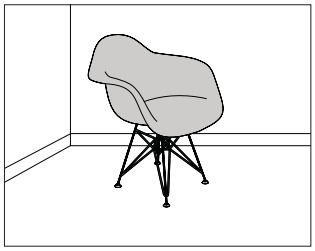

Product Information

Description

This chair has a single-piece shell with waterfall edges and molded back, seat and arms. Base options include a wire base, 4-leg base, or a dowel-leg base. The dowel-leg base has non-adjustable nylon glides.

Ebony (EN) dowel legs are stained ash wood with black glides.

Maple (Z5) and walnut (OU) dowel legs have white glides.

Dimensions

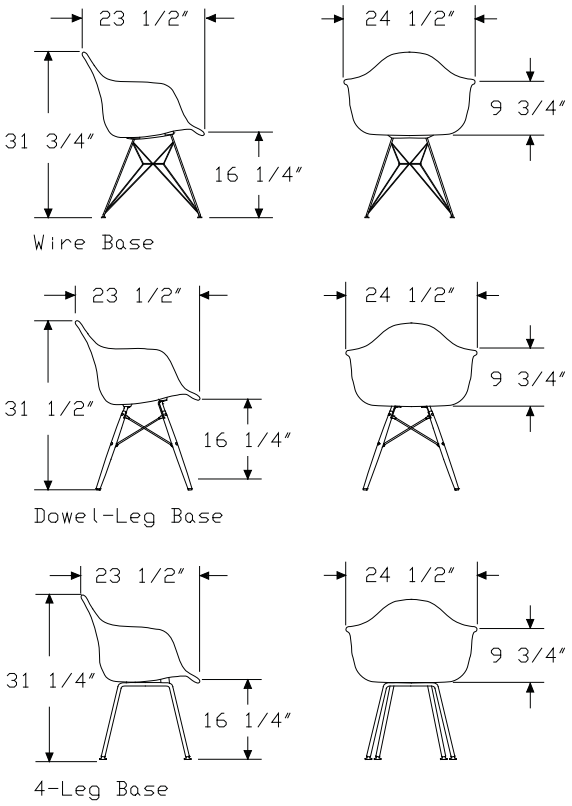

Specification Information

Step 1.

DA

Step 2. Base Option

R.	wire base	
W.	dowel base	
X.	4-leg base	

Prices for Steps 1-2.

DAR.		$435
DAW.		$552
DAX.		$361

Step 3. Base Finish

For wire base (R.) or 4-leg base (X.)

47	trivalent chrome	+$0
BK	black	+$0

For dowel base (W.)

BK	black	+$0

Step 4. Dowel Finish

For dowel base (W.)

Z5	maple	+$0
EN	ebony	+$30
OU	walnut	+$30

Step 5. Seat/Back Finish

4T	aqua sky	+$0
5B	java	+$0
6Y	wafer	+$0
92	greystone	+$0
9J	sparrow	+$0
ZA	black	+$0
ZE	red	+$0
ZF	white	+$0
ZH	light blue	+$0
ZS	lime green	+$0

Step 6. Glide Option

For wire base (R.) or 4-leg base (X.)

E8	standard glide	+$0
E9	standard glide with felt bottom	+$0

Nelson™ Swag Leg Armchair DAF

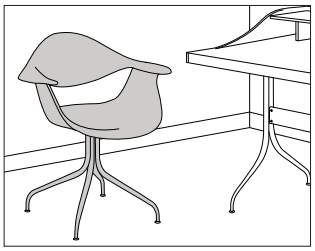

Product Information

Description

This chair has a 2-piece molded seat with arms and back, waterfall edges, a cast-aluminum base with steel-tube legs, and adjustable glides.

Notes

Seat and back sections are permanently assembled.

Seat and back can be specified in any color combination.

Dimensions

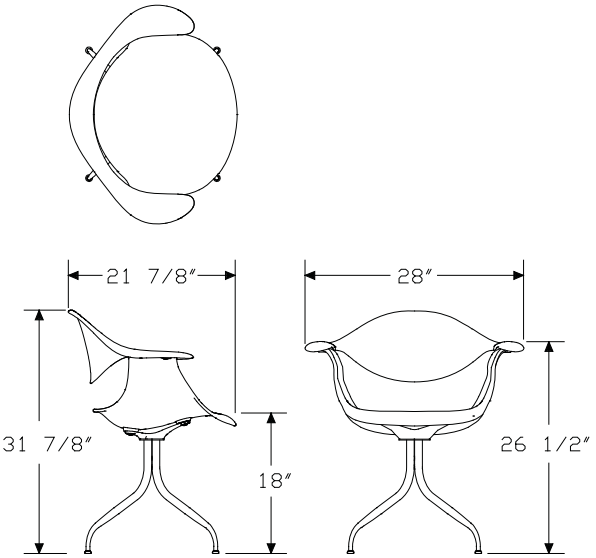

Specification Information

Step 1.

DAF A		$569

Step 2. Base Finish

91	white A	+$0
BU	black umber A	+$0
CH	chrome A	+$0

Step 3. Seat Finish

ZA	black A	+$0
ZF	white A	+$0
ZG	grey A	+$0

Step 4. Back Finish

ZA	black A	+$0
ZF	white A	+$0
ZG	grey A	+$0

Air-Chair MGA00.

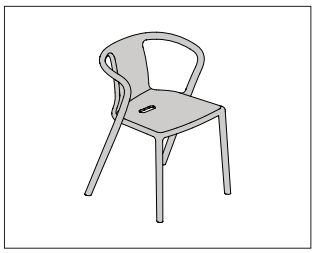

Product Information

Description

This stacking chair is available with or without arms and is made from polypropylene with glass fibre added. Chairs can stack up to 10 high. Package contains 4 chairs.

Notes

This chair is suitable for outdoor use.

Dimensions

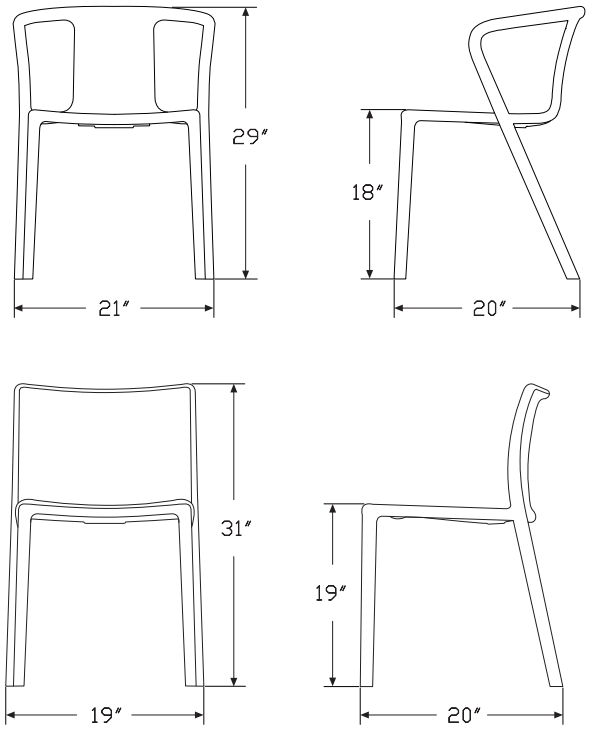

Specification Information

Step 1.

MGA00.

Step 2. Arms

N	no arms
A	arms

Prices for Steps 1-2.

MGA00. N		$728
	A	$808

Step 3. Finish

For no arms (N)

YBB	beige	+$0
YBC	black A	+$0
YBD	brick A	+$0
YBF	dark green A	+$0
YBG	fuchsia A	+$0
YBH	green A	+$0
YBL	light green A	+$0
YBM	orange A	+$0
YBN	sky blue A	+$0
YBP	white	+$0

For arms (A)

YBB	beige	+$0
YBG	fuchsia A	+$0
YBH	green A	+$0
YBJ	grey anthracite A	+$0
YBL	light green A	+$0
YBM	orange	+$0
YBN	sky blue A	+$0
YBP	white	+$0

Air-Chair to Air-Chair Connector MGA90.

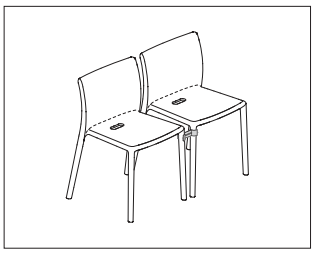

Product Information

Description

This linking device connects air-chair to air-chair (MGA01, MGA11.)

Dimensions

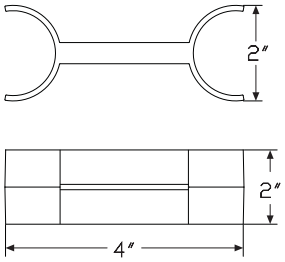

Specification Information

Step 1.

MGA90. A $13

Air-Folding Chair MGA01.

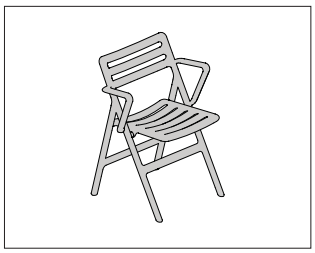

Product Information

Description

This folding chair is made from polypropylene with glass fibre added. It is available with or without arms. Package contains 2 chairs.

Notes

This chair is suitable for outdoor use.

Dimensions

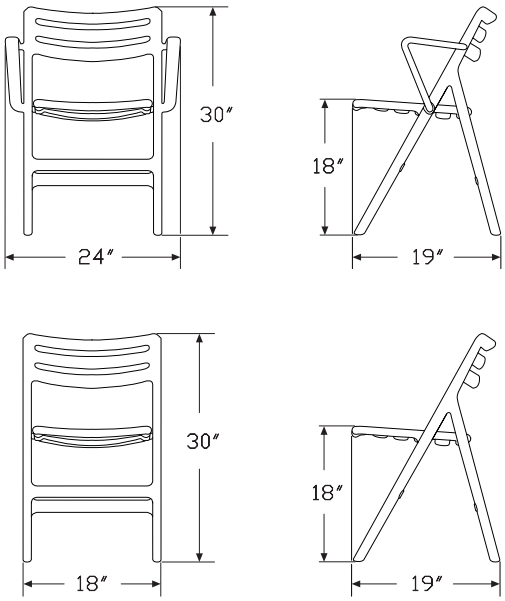

Specification Information

Step 1.

MGA01.

Step 2. Arms

N	no arms
A	arms A

Prices for Steps 1-2.

MGA01.	**N**	$402
	A	$446

Step 3. Finish

YBB	beige A	+$0
YBH	green A	+$0
YBM	orange	+$0
YBN	sky blue A	+$0
YBP	white	+$0

Chair First MGF00.

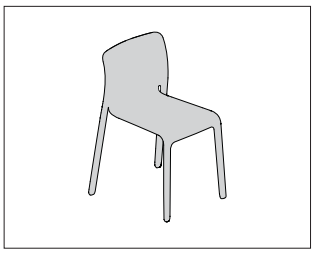

Product Information

Description

This stacking chair is made from polypropylene with glass fibre added. Chairs can stack up to 10 high. Package contains 4 chairs.

Notes

Chair is suitable for outdoor use.

Dimensions

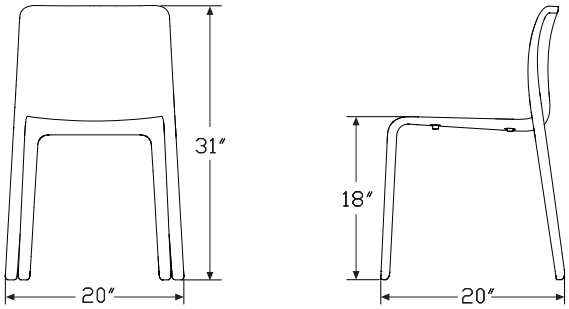

Specification Information

Step 1.

MGF00. A	$1028

Step 2. Finish

YGB	beige A	+$0
YGC	black A	+$0
YGF	blue A	+$0
YGG	lime green A	+$0
YGH	olive green A	+$0
YGJ	purple A	+$0
YGK	red A	+$0
YGM	white A	+$0

Chair_ One Stacking Base MGE00.

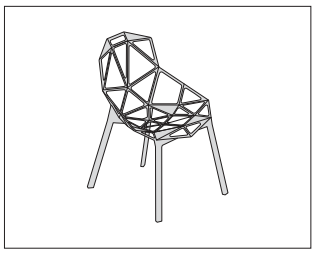

Product Information

Description

This chair comes with a four-leg base. Chairs can stack up to 8 high. Package contains 2 chairs.

Notes

Chairs with painted aluminum seat and legs or painted aluminum seat/polished aluminum legs are suitable for outdoor use.

Dimensions

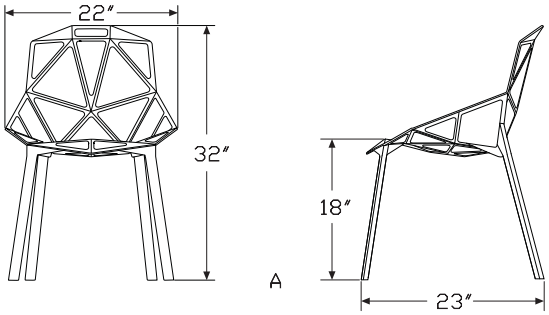

Specification Information

Step 1.

MGE00.A

Step 2. Seat/Leg Material

PP	painted aluminum seat/polished aluminum legs
PA	painted aluminum seat and legs
AL	polished aluminum seat and legs A

Prices for Steps 1-2.

MGE00.A	**PP**	$995
	PA	$1035
	AL	$2498

Step 3. Seat Finish

For painted aluminum seat/polished aluminum legs (PP)

YHH	grey anthracite A	+$0
YHM	red	+$0
YHP	white	+$0

For painted aluminum seat and legs (PA)

YHB	black	+$0
YHP	white A	+$0

For polished aluminum seat and legs (AL)

YHQ	polished aluminum A	+$0

Chair_ One 4-Star Base MGE00.

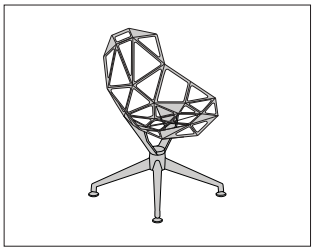

Product Information

Description

This chair accepts a four-star or concrete base.

Notes

Chairs with painted aluminum seat and legs or painted aluminum seat and polished aluminum legs are suitable for outdoor use.

Dimensions

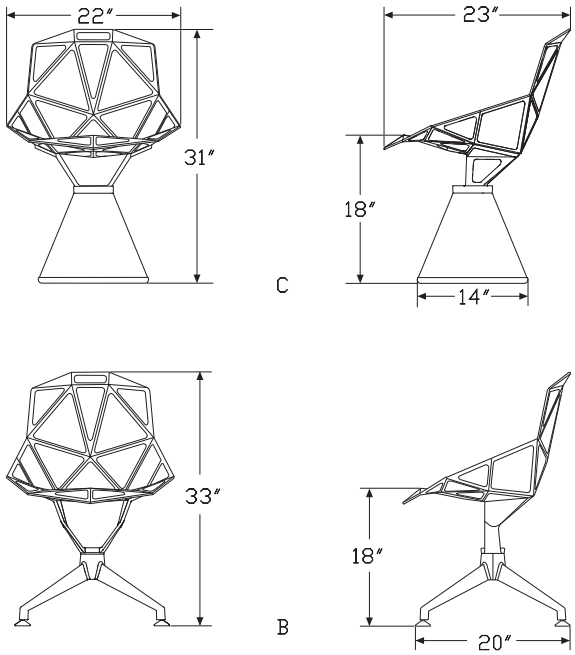

Specification Information

Step 1.

MGE00. A

Step 2. Base

B 4-star base A

C concrete base A

Step 3. Seat/Leg Material

For 4-star base (B)

PA painted aluminum seat and legs A

AL polished aluminum seat and legs A

For concrete base (C)

PC painted aluminum seat/natural concrete base A

Prices for Steps 1-3.

	PA	PC	AL
MGE00.B	$703	—	1602
C	—	$738	—

Step 4. Seat Finish

For 4-star base (B) with painted aluminum seat and legs (PA)

YHB	black A	+$0
YHP	white A	+$0

For concrete base (C) with painted aluminum seat/natural concrete base (PC)

YHB	black A	+$0
YHH	grey anthracite A	+$0
YHM	red A	+$0
YHP	white A	+$0

For 4-star base (B) with polished aluminum seat and legs (AL)

YHQ	polished aluminum A	+$0

Chair_One Cushion MGE90.

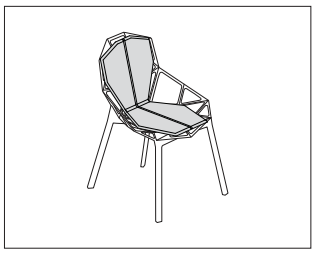

Product Information

Description

This cushion is available as a seat and back or seat only. Package contains 2 seat and back cushions or 2 seat cushions.

Dimensions

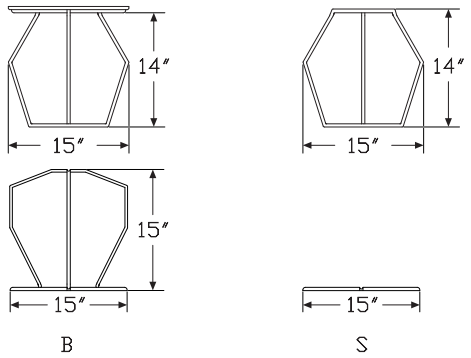

Specification Information

Step 1.

MGE90. A

Step 2. Type

S	seat cushion A
B	seat and back cushion A

Prices for Steps 1-2.

MGE90.S		$318
	B	$490

Step 3. Fabric

		S	B
YHF	brown with dark brown trim A	+$0	0
YHG	fuschia with orange trim A	+$0	0
YHJ	grey with black trim A	+$0	0
YHL	orange with fuschia trim A	+$0	0
YHN	sky blue with blue trim A	+$0	0
YHC	black leather A	+$264	366
YHK	natural leather A	+$264	366

Deja-Vu Chair MGD00.

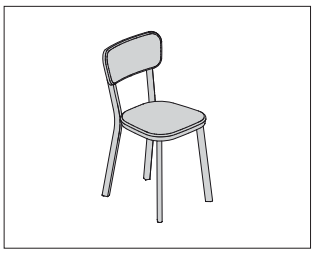

Product Information

Description

The outer back material of this chair is available in polished aluminum, painted aluminum, plastic, and wood. The seat and inner back material is die-cast aluminum, and the legs are extruded aluminum.

Dimensions

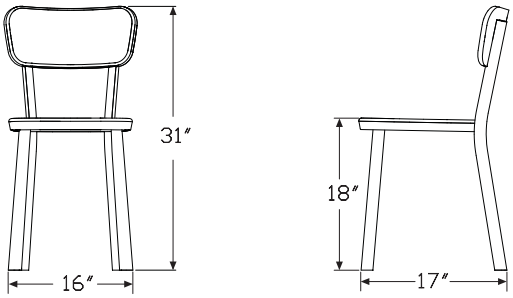

Specification Information

Step 1.

MGD00.

Step 2. Outer Back Material

AL	polished aluminum outer back	
PL	plastic outer back A	
PA	painted aluminum outer back A	
WD	wood outer back A	

Prices for Steps 1-2.

MGD00.AL		$711
	PL	$742
	PA	$762
	WD	$848

Step 3.

Outer Back Finish

For polished aluminum outer back (AL)

YFD	polished aluminum	+$0

Outer Back Finish

For plastic outer back (PL)

YFB	black A	+$0
YFH	white A	+$0

Outer Back Finish

For wood outer back (WD)

YFC	oak A	+$0
YFG	oak stained wenge A	+$0

Leg/Seat/Back Finish

For painted aluminum outer back (PA)

YFB	black A	+$0
YFH	white A	+$0

Paso Doble Chair MGP00.

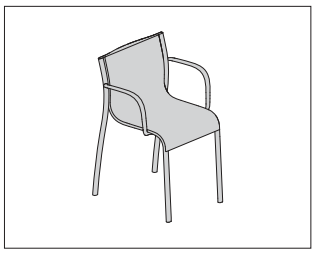

Product Information

Description

This stacking chair has an aluminum frame and is available with or without arms. The arms and crosspieces come in die-cast aluminum. Chairs can stack up to 5 high. Package contains 2 chairs.

Dimensions

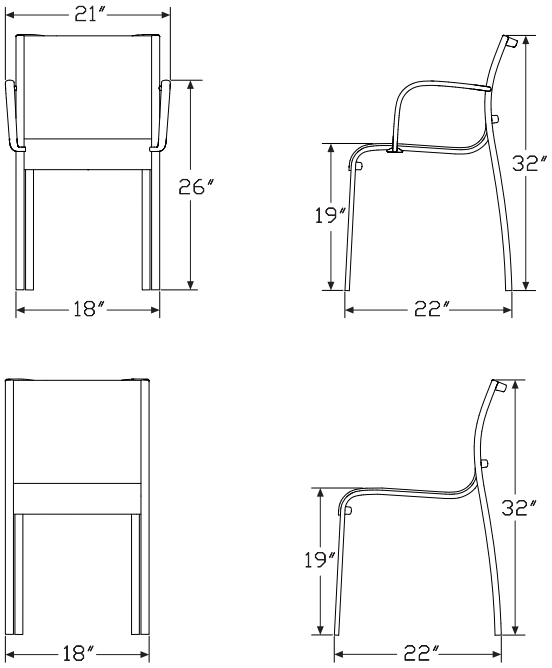

Specification Information

Step 1.

MGP00. A

Step 2. Arms

N	no arms	A
A	arms	A

Prices for Steps 1-2.

MGP00. N		$1238
	A	$1710

Step 3. Frame Finish

			N	A
YKB	black	A	+$0	0
YKJ	white	A	+$0	0
YKV	polished aluminum	A	+$346	416

Step 4. Seat Fabric

For black (YKB)

			N	A
YKM	black polymer	A	+$0	0
YKC	black polyster-cotton	A	+$52	40
YKP	black leather	A	+$894	884

For white (YKJ)

YKL	white polymer	A	+$0

For polished aluminum (YKV)

			N	A
YKL	white polymer	A	+$0	0
YKM	black polymer	A	+$0	0
YKC	black polyster-cotton	A	+$40	40
YKF	green polyester-cotton	A	+$40	40
YKG	orange polyester-cotton	A	+$40	40
YKH	purple polyester-cotton	A	+$40	40
YKR	white-black melange	A	+$40	40
YKD	black leather	A	+$1006	854

Steelwood Chair MGS00.

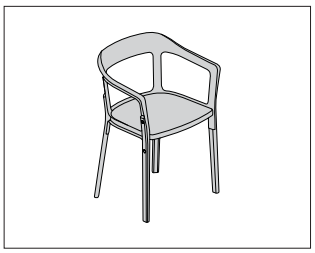

Product Information

Description

The frame of this chair with arms is a steel plate painted in epoxy resin. The legs and seat are solid beech, available natural and painted.

Dimensions

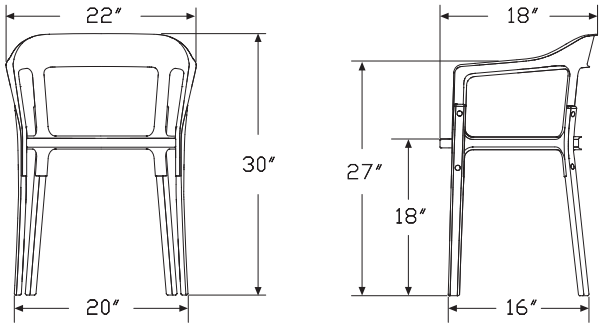

Specification Information

Step 1.

MGS00.		$697

Step 2. Legs/Seat/Frame Finish

YMB	black A	+$0
YMM	natural beech and white	+$0
YMD	red	+$0
YMF	white A	+$0
YMK	natural beech and black A	+$0

Troy Chair MGY00.

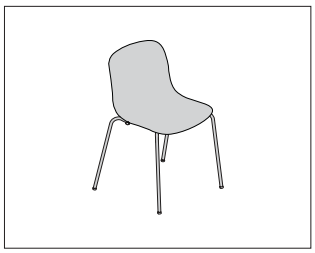

Product Information

Description

The frame of this stacking chair is made from a steel tube, available in chrome or painted. The seat is beech plywood with a high relief pattern on the back side. Chairs can stack up to 6 high. Package contains 4 chairs.

Dimensions

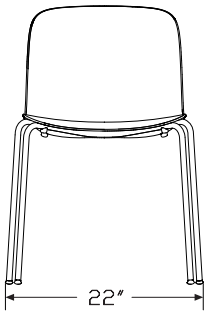

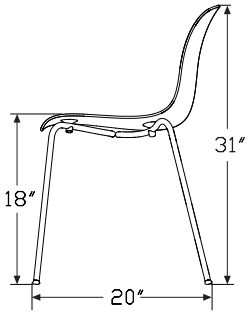

Specification Information

Step 1.

MGY00. A		$2544

Step 2. Frame Finish

YNG	black A	+$0
YNH	brown A	+$0
YNJ	white A	+$0
YNK	chrome A	+$44

Step 3. Seat Finish

For black (YNG)

YNB	black stained beech A	+$0

For brown (YNH)

YND	wenge beech A	+$0

For white (YNJ)

YNF	bleached beech A	+$0

For chrome (YNK)

YNC	natural beech A	+$0
YND	wenge beech A	+$0
YNF	bleached beech A	+$0
YNB	black stained beech A	+$0

Osso Chair MGJ00.

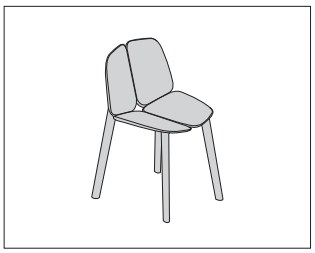

Product Information

Description

This solid wood side chair is available in an ash, oak, or maple frame.

Notes

Chairs are not stackable.

Dimensions

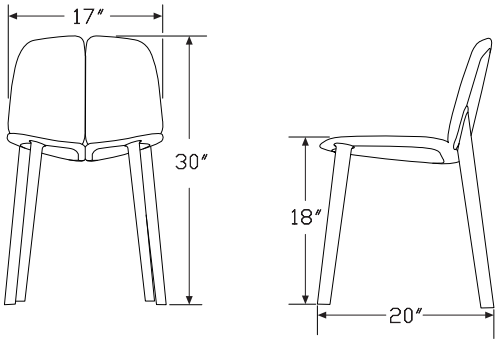

Specification Information

Step 1.

MGJ00. A		$1401

Step 2. Frame Finish

YSB	black wax ash A	+$0
YSC	blue wax ash A	+$0
YSD	green wax ash A	+$0
YSF	dark grey wax ash A	+$0
YSG	natural wax ash A	+$0
YSH	pink wax ash A	+$0
YSJ	white wax ash A	+$0
YSM	natural wax maple A	+$107
YSL	natural wax oak A	+$187

Branca Chair MGR00.

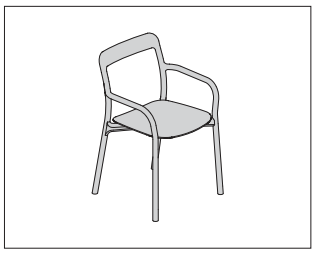

Product Information

Description

This solid wood chair with armrests is available with a solid beech or ash frame. Chairs can stack up to 3 high.

Dimensions

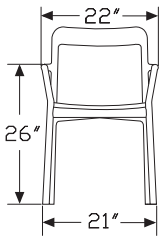

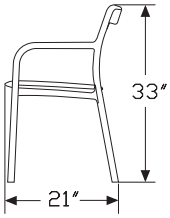

Specification Information

Step 1.

MGR00.

Step 2. Upholstery

N	no upholstery	
U	upholstered seat A	

Prices for Steps 1-2.

MGR00. N		$1506
	U	$1771

Step 3. Frame Finish

YRB	black mat anilin beech A	+$0
YRC	chocolate/natural seat ash	+$0
YRD	green wax ash A	+$0
YRF	natural wax ash	+$0
YRG	white anilin ash A	+$0
YRH	black mat anilin ash	+$0

Step 4. Fabric

For upholstered seat (U)

YDF01	nord wool black/dark grey thread A	+$0
YDF02	nord wool grey/white thread A	+$0
YDF03	nord wool lime/dark grey thread A	+$0
YDF04	nord wool orange/white thread A	+$0

He Said Chair MGH00.

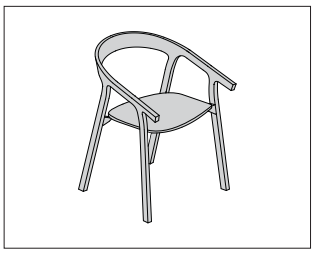

Product Information

Description

This solid wood chair with armrests is available in a solid beech or ash frame. Chairs can stack up to 2 high.

Dimensions

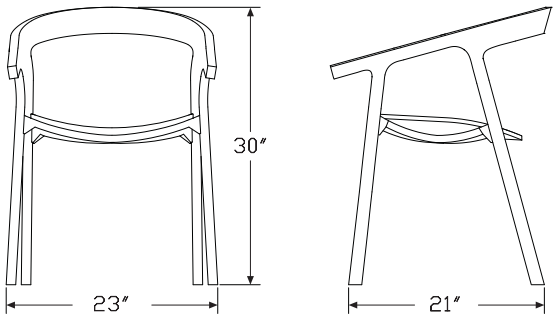

Specification Information

Step 1.

MGH00. A

Step 2. Upholstery

N	no upholstery A	
U	upholstered seat and back A	

Prices for Steps 1-2.

MGH00.N		$1595
	U	$2401

Step 3. Frame Finish

YQB	black anilin ash A	+$0
YQD	black anilin beech A	+$0
YQF	white lacquered beech A	+$0
YQC	natural ash A	+$53

Step 4. Fabric		
For upholstered seat and back (U)		
YDC01	magia black A	+$0
YDC02	magia coral A	+$0
YDC03	magia corn A	+$0
YDC04	magia currant A	+$0
YDC05	magia diamond A	+$0
YDC06	magia heart red A	+$0
YDC07	magia jasmin A	+$0
YDC08	magia mystery A	+$0
YDC09	magia paradise A	+$0
YDC10	magia prune A	+$0
YDC11	magia rosewood A	+$0
YDC12	magia secret A	+$0
YDC13	magia silk A	+$0
YDC14	magia snow A	+$0
YDD01	pura black A	+$0
YDD02	pura coral A	+$0
YDD03	pura corn A	+$0
YDD04	pura currant A	+$0
YDD05	pura diamond A	+$0
YDD06	pura heart red A	+$0
YDD07	pura jasmin A	+$0
YDD08	pura mystery A	+$0
YDD09	pura paradise A	+$0
YDD10	pura prune A	+$0
YDD11	pura rosewood A	+$0
YDD12	pura secret A	+$0
YDD13	pura silk A	+$0
YDD14	pura snow A	+$0

She Said Chair MGH01.

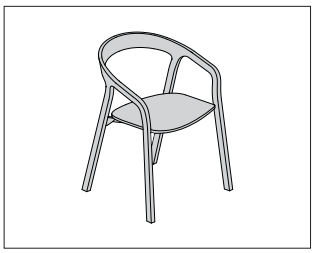

Product Information

Description

This solid wood chair with armrests is available in a solid beech or ash frame. Chairs can stack up to 2 high.

Dimensions

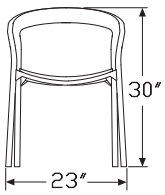

Specification Information

Step 1.

MGH01. A

Step 2. Upholstery

N	no upholstery A	
U	upholstered seat and back A	

Prices for Steps 1-2.

MGH01.N		$1595
	U	$2401

Step 3. Frame Finish

YQB	black anilin ash A	+$0
YQD	black anilin beech A	+$0
YQF	white lacquered beech A	+$0
YQC	natural ash A	+$53

Step 4. Fabric		
For upholstered seat and back (U)		
YDC01	magia black A	+$0
YDC02	magia coral A	+$0
YDC03	magia corn A	+$0
YDC04	magia currant A	+$0
YDC05	magia diamond A	+$0
YDC06	magia heart red A	+$0
YDC07	magia jasmin A	+$0
YDC08	magia mystery A	+$0
YDC09	magia paradise A	+$0
YDC10	magia prune A	+$0
YDC11	magia rosewood A	+$0
YDC12	magia secret A	+$0
YDC13	magia silk A	+$0
YDC14	magia snow A	+$0
YDD01	pura black A	+$0
YDD02	pura coral A	+$0
YDD03	pura corn A	+$0
YDD04	pura currant A	+$0
YDD05	pura diamond A	+$0
YDD06	pura heart red A	+$0
YDD07	pura jasmin A	+$0
YDD08	pura mystery A	+$0
YDD09	pura paradise A	+$0
YDD10	pura prune A	+$0
YDD11	pura rosewood A	+$0
YDD12	pura secret A	+$0
YDD13	pura silk A	+$0
YDD14	pura snow A	+$0

Envelope Chair SBEV-

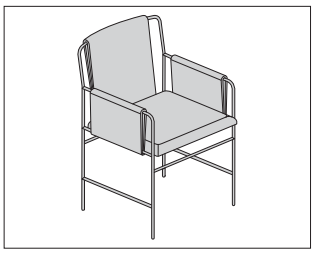

Product Information

Description

This chair has a welded tubular steel frame. The seat is foam and Dacron® over plywood. The back consists of FR foam.

Notes

Customers Own Material (COM) requires 2½yards. Customers Own Leather (COL) requires 40 square feet. See Order Information in Appendices.

Dimensions

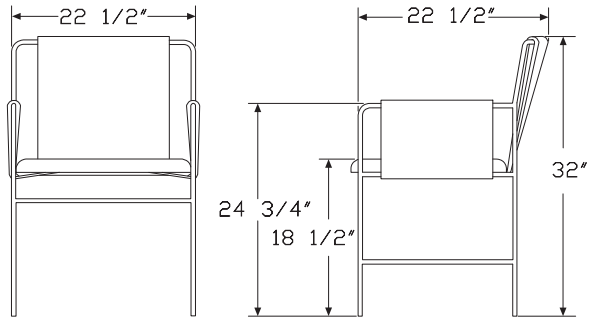

Specification Information

Step 1.

SBEV-1020 A	$1135

Step 2. Upholstery

COM (Geiger) A	+$0
COL (Geiger) A	+$200
Price Category (Geiger) A	+$124
Price Category (Geiger) B	+$135
Price Category (Geiger) C	+$146
Price Category (Geiger) D	+$169
Price Category (Geiger) F	+$214
Price Category (Geiger) G	+$236
Price Category (Geiger) H	+$259
Price Category (Geiger) J	+$293
Price Category (Geiger) K	+$326
Price Category (Geiger) L	+$360
Price Category (Geiger) M	+$405
Price Category (Geiger) P	+$495
Price Category (Geiger) Q	+$1000
Price Category (Geiger) Leather	+$1520

Step 3. Base Finish

BNZ	bronze A	+$0
CHR	chrome A	+$0
SAC	satin chrome A	+$0

Step 4. Fire Retardancy

NOCAL	not fire retardant A	+$0
133	fire retardant A	+$163

Full Twist Guest Chair

SFT1M
SFT1N
SFT1W

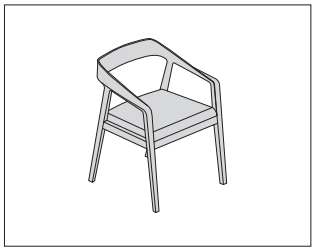

Product Information

Description

This chair has an upholstered seat and a walnut or maple frame.

Dimensions

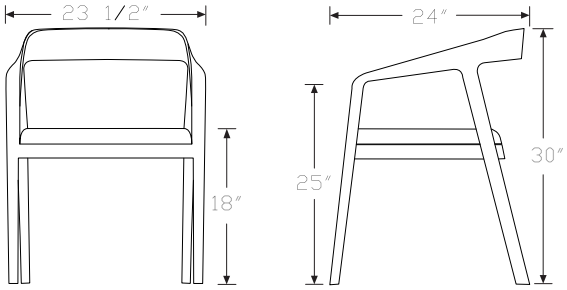

Specification Information

Step 1.

SFT1 A

Step 2. Frame Finish

M	maple A
W	walnut A
N	walnut with clear finish A

Prices for Steps 1-2.

SFT1M	$1275
SFT1W	$1875
SFT1N	$2195

Step 3. Upholstery

Price Category COM (Geiger) A	+$0
Price Category COL (Geiger) A	+$90
Price Category (Geiger) A	+$41
Price Category (Geiger) B	+$45
Price Category (Geiger) C	+$49
Price Category (Geiger) D	+$56
Price Category (Geiger) F	+$71
Price Category (Geiger) G	+$79
Price Category (Geiger) H	+$86
Price Category (Geiger) J	+$98
Price Category (Geiger) K	+$109
Price Category (Geiger) L	+$120
Price Category (Geiger) M	+$135
Price Category (Geiger) N	+$150
Price Category (Geiger) P	+$165
Price Category (Geiger) Q	+$450
Price Category (Geiger) Leather	+$684

Step 4. Wood Finish		
For maple (M)		
611	champagne maple (natural) A	+$0
632	sundance anigre A	+$0
633	caramel anigre A	+$0
634	henna anigre A	+$0
640	sundance cherry on maple A	+$0
643	caramel cherry A	+$0
644	henna cherry A	+$0
645	port cherry A	+$0
646	cocoa cherry A	+$0
654	henna sapele A	+$0
655	port sapele A	+$0
656	cocoa sapele A	+$0
657	espresso sapele A	+$0
673	caramel walnut A	+$0
674	henna walnut A	+$0
675	port walnut A	+$0
676	cocoa walnut A	+$0
2U	light brown walnut A	+$0
40	dark brown walnut A	+$0
EK	medium red walnut A	+$0
EY	light anigre A	+$0
UL	natural maple A	+$0
UX	walnut on cherry A	+$0
For walnut (W)		
673	caramel walnut A	+$0
674	henna walnut A	+$0
675	port walnut A	+$0
676	cocoa walnut A	+$0
For walnut with clear finish (N)		
672	sundance walnut A	+$0

Step 5. Fire Retardancy		
NOCAL	not fire retardant A	+$0
133	fire retardant A	+$49

Eames® Aluminum Group Lounge Chair

EA316
EA322

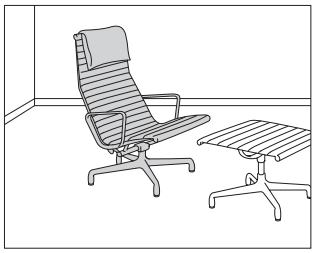

Product Information

Description

This low-back chair has a lightweight aluminum frame with suspended upholstery. It has a 4-star base with 1/2" (GD) glides for hard floors or carpet, swivel mechanism, and fixed seat height.

Notes

Chair is tested and warranted for use by persons 300 pounds and under.

When chair is specified with Cygnus™ mesh, it meets CAL 133 requirements.

For description of glide, see Casters and Glides in Appendices.

Customer's Own Material (COM) requires 1 1/3 yards. Customer's Own Leather (COL) requires 45 square feet. See Order Information in Appendices.

Dimensions

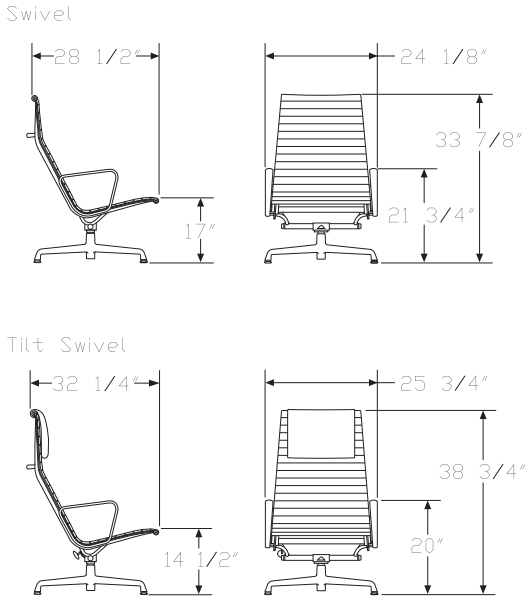

Specification Information

Step 1.

EA3 A

Step 2. Tilt/Arms

16	swivel and arms A	
22	tilt swivel, arms, and headrest A	

Prices for Steps 1-2.

EA316	$1787
EA322	$1935

Step 3. Base/Frame Finish

91	white A	+$133
G2	graphite satin A	+$107
L	polished aluminum A	+$0

Step 4. Fabric

For swivel and arms (16)

Price Category 1	+$0
Price Category 2	+$50
Price Category 3	+$113
Price Category 4	+$162
Price Category 7 A	+$240
Price Category 9	+$621
Price Category 11	+$826
Price Category B	+$51
Price Category E	+$127
Price Category F	+$178
Price Category H	+$304
Price Category I	+$380
Price Category K	+$531
Price Category R	+$1326
Price Category V	+$2434

Eames® Aluminum Group Lounge Chair *continued*

For tilt swivel, arms, and headrest (22)	
Price Category 1	+$0
Price Category 2	+$50
Price Category 3	+$113
Price Category 4	+$162
Price Category 7 A	+$240
Price Category 9	+$621
Price Category B	+$51
Price Category 11	+$826
Price Category E	+$127
Price Category F	+$178
Price Category H	+$304
Price Category I	+$380
Price Category K	+$531
Price Category R	+$1326
Price Category V	+$2434

Eames® Aluminum Group Ottoman

EA323

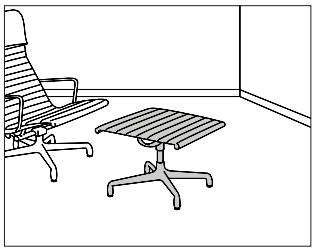

Product Information

Description

This upholstered ottoman has a lightweight aluminum frame and 1/2" (GD) glides for hard floors or carpet.

Notes

When ottoman is specified with Cygnus™ mesh, it meets CAL 133 requirements.

For description of glides, see Casters and Glides in Appendices.

Customer's Own Material (COM) requires 1 yard. Customer's Own Leather (COL) requires 20 square feet. See Order Information in Appendices.

Dimensions

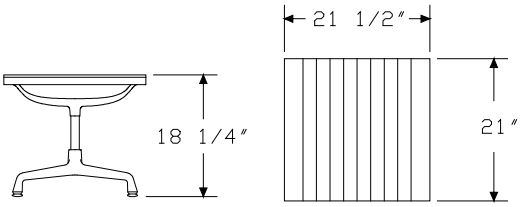

Specification Information

Step 1.

EA323 A	$854

Step 2. Base/Frame Finish

91	white A	+$69
G2	graphite satin A	+$55
L	polished aluminum A	+$0

Step 3. Fabric

See application chart and textiles list for fabric usage and numbers. First 2 digits of number indicate fabric line; remaining digit(s) indicate fabric color.

Price Category 1	+$0
Price Category 2	+$26
Price Category 3	+$50
Price Category 4	+$75
Price Category 7 A	+$109
Price Category 9	+$281
Price Category 11	+$332
Price Category B	+$26
Price Category E	+$64
Price Category F	+$90
Price Category H	+$152
Price Category I	+$191
Price Category K	+$266
Price Category R	+$647
Price Category V	+$2194

Eames® Soft Pad Lounge Chair

EA416
EA422

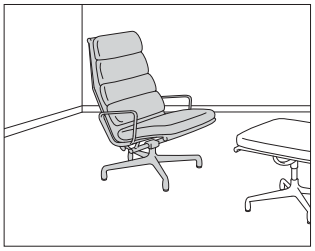

Product Information

Description

This high-back chair has a lightweight aluminum frame and 2"-thick upholstered foam cushions. It has a 4-star base with 1/2" (GD) glides for hard floors or carpet and a fixed seat height.

Notes

Chair is tested and warranted for use by persons 300 pounds and under.

For description of glides, see Casters and Glides in Appendices.

Customer's Own Material (COM) requires 3 yards for 3-cushion chair and 4 yards for 4-cushion chair. Customer's Own Leather (COL) requires 56 square feet for 3-cushion chair and 63 square feet for 4-cushion chair. See Order Information in Appendices.

Dimensions

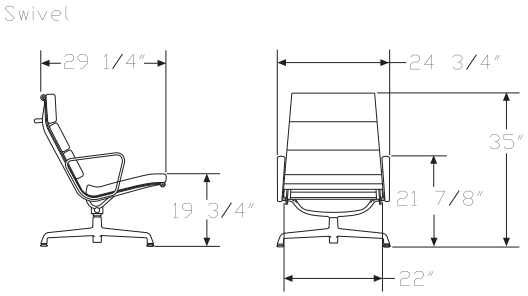

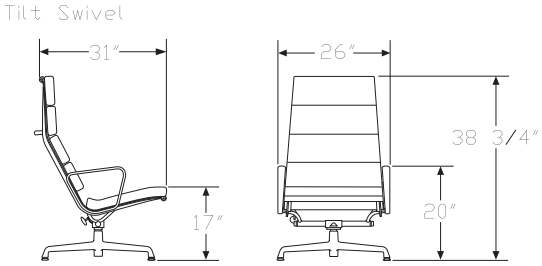

Specification Information

Step 1.

EA4 A

Step 2. Tilt/Number of Cushions/Arms

16	swivel, 3 cushions, and arms A	
22	tilt swivel, 4 cushions, and arms A	

Prices for Steps 1-2.

EA416	$3109
EA422	$3154

Step 3. Base/Frame Finish

91	white A	+$133
G2	graphite satin A	+$107
L	polished aluminum A	+$0

Step 4. Fabric

Price Category 1 A	+$0
Price Category 2	+$63
Price Category 3	+$149
Price Category 4	+$238
Price Category 7 A	+$349
Price Category 9	+$630
Price Category 11	+$936
Price Category B	+$90
Price Category E	+$222
Price Category F	+$310
Price Category G	+$399
Price Category H	+$531
Price Category I	+$664
Price Category J	+$796
Price Category K	+$928
Price Category L	+$1047
Price Category M	+$1314
Price Category R	+$2098
Price Category V	+$2434

Eames® Soft Pad Ottoman EA423

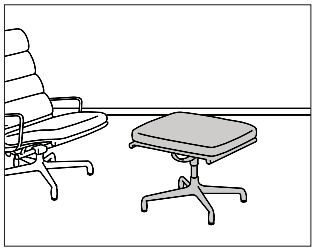

Product Information

Description

This ottoman has a lightweight aluminum frame, a 2"-thick upholstered foam cushion, and 1/2" (GD) glides for hard floors or carpet.

Notes

For description of glides, see Casters and Glides in Appendices.

Customer's Own Material (COM) requires 1 1/4 yards. Customer's Own Leather (COL) requires 27 square feet. See Order Information in Appendices.

Dimensions

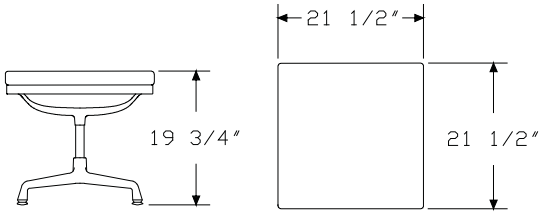

Specification Information

Step 1.

EA423 A		$1314

Step 2. Base/Frame Finish

91	white A	+$69
G2	graphite satin A	+$55
L	polished aluminum A	+$0

Step 3. Fabric

See application chart and textiles list for fabric usage and numbers. First 2 digits of number indicate fabric line; remaining digit(s) indicate fabric color.

Price Category 1	+$0
Price Category 2	+$62
Price Category 3	+$94
Price Category 4	+$118
Price Category 7 A	+$139
Price Category 9	+$308
Price Category 11	+$440
Price Category B	+$32
Price Category E	+$80
Price Category F	+$112
Price Category G	+$143
Price Category H	+$191
Price Category I	+$238
Price Category J	+$285
Price Category K	+$333
Price Category L	+$376
Price Category M	+$472
Price Category R	+$660
Price Category V	+$2194

Eames® Lounge Chair and Ottoman

ES670

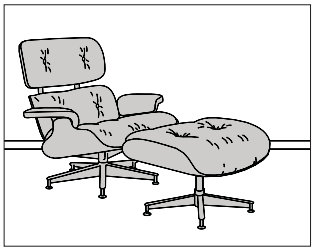

Product Information

Description

This fixed-height chair has a molded veneer seat and back shell; the ottoman has a molded veneer shell. Both the chair and ottoman have foam cushions with leather upholstery and a black enameled base with polished aluminum accents. The chair has a swivel mechanism.

Notes

Customer's Own Leather (COL) requires 55 square feet. See Order Information in Appendices.

Dimensions

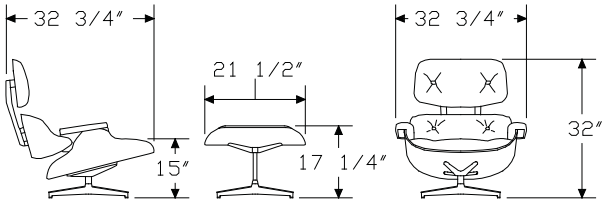

Specification Information

Step 1.

ES67071 A	$4495

Step 2. Shell Finish

OU	walnut A	+$0
CX	natural cherry A	+$85
5Q	oiled walnut A	+$1010
9N	santos palisander A	+$1070
5D	oiled santos palisander A	+$2080

Step 3. Leather

See application chart and textiles list for fabric usage and numbers. First 2 digits of number indicate fabric line; remaining digit(s) indicate fabric color.

Price Category 7 A	+$300
Price Category 9	+$612
Price Category 11	+$924
Price Category R	+$1254
Price Category V	+$2434

Eames® Lounge Chair and Ottoman White Ash

ES670

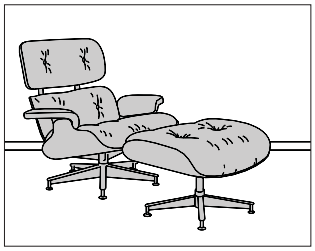

Product Information

Description

This fixed-height chair and ottoman has a molded white ash plywood shell and foam cushions with white leather upholstery. The chair base, back supports, and ottoman base are white enamel with aluminum accents. The chair has a swivel mechanism.

Dimensions

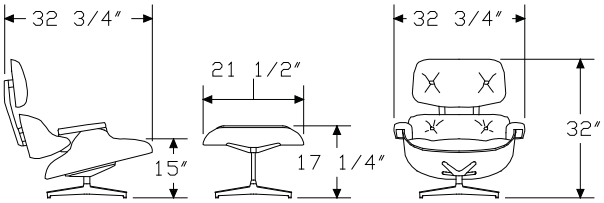

Specification Information

Step 1.

ES67071RE A $4995

Step 2. Leather

See application chart and textiles list for fabric usage and numbers. First 2 digits of number indicate fabric line; remaining digit(s) indicate fabric color.

Price Category 11 +$924

Eames® Lounge Chair ES670

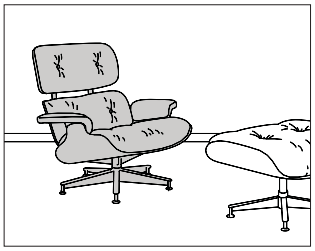

Product Information

Description

This fixed-height chair has a molded veneer seat and back shell. It has foam cushions with leather upholstery, a black enameled base with polished aluminum accents, and a swivel mechanism.

Notes

Customer's Own Leather (COL) requires 40 square feet. See Order Information in Appendices.

Dimensions

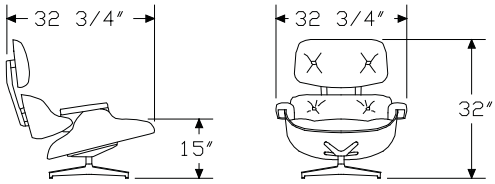

Specification Information

Step 1.

ES670 A		$3601

Step 2. Shell Finish

OU	walnut A	+$0
CX	natural cherry A	+$60
5Q	oiled walnut A	+$677
9N	santos palisander A	+$870
5D	oiled santos palisander A	+$1547

Step 3. Leather

See application chart and textiles list for fabric usage and numbers. First 2 digits of number indicate fabric line; remaining digit(s) indicate fabric color.

Price Category 7 A	+$288
Price Category 9	+$448
Price Category 11	+$672
Price Category R	+$1188
Price Category V	+$2314

Eames® Lounge Chair White Ash ES670

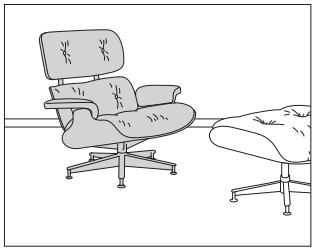

Product Information

Description

This fixed-height chair has a molded white ash plywood shell and foam cushions with white leather upholstery. The chair base and back supports are white enamel with aluminum accents. The chair has a swivel mechanism.

Dimensions

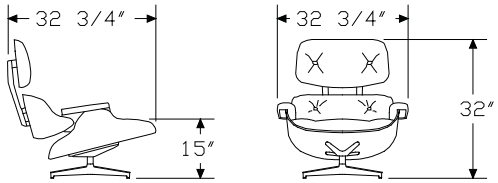

Specification Information

Step 1.

ES670RE A $3951

Step 2. Leather

See application chart and textiles list for fabric usage and numbers. First 2 digits of number indicate fabric line; remaining digit(s) indicate fabric color.

Price Category 11 +$672

Eames® Ottoman ES671

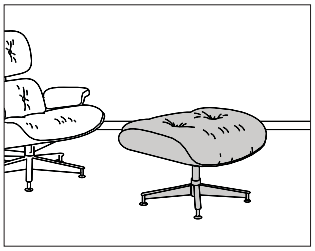

Product Information

Description

This ottoman has a molded veneer shell, foam cushion with leather upholstery, and black enameled base with polished aluminum accents.

Notes

Customer's Own Leather (COL) requires 15 square feet. See Order Information in Appendices.

Dimensions

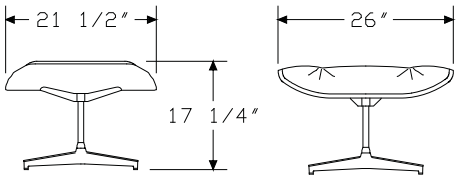

Specification Information

Step 1.

ES671 A		$1373

Step 2. Shell Finish

OU	walnut A	+$0
CX	natural cherry A	+$25
9N	santos palisander A	+$318
5Q	oiled walnut A	+$333
5D	oiled santos palisander A	+$651

Step 3. Leather

See application chart and textiles list for fabric usage and numbers. First 2 digits of number indicate fabric line; remaining digit(s) indicate fabric color.

Price Category 7 A	+$107
Price Category 9	+$164
Price Category 11	+$252
Price Category R	+$543
Price Category V	+$2194

Eames® Ottoman White Ash ES671

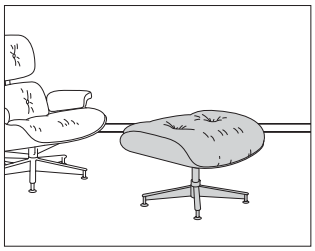

Product Information

Description

This ottoman has a molded plywood shell, foam cushion with white leather upholstery, and a white enamel base with aluminum accents.

Dimensions

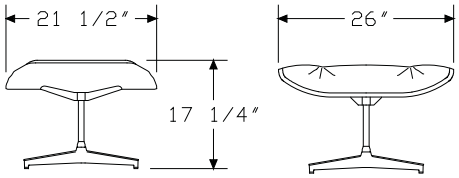

Specification Information

Step 1.

ES671RE A $1523

Step 2. Leather

See application chart and textiles list for fabric usage and numbers. First 2 digits of number indicate fabric line; remaining digit(s) indicate fabric color.

Price Category 11 +$252

Eames® Molded Plastic Armchair Rocker Base RAR.

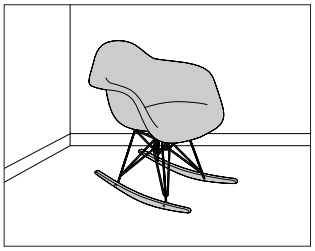

Product Information

Description

This chair has a single-piece molded seat and back with arms, waterfall edges, and chrome or black legs with solid-maple or walnut rockers.

Dimensions

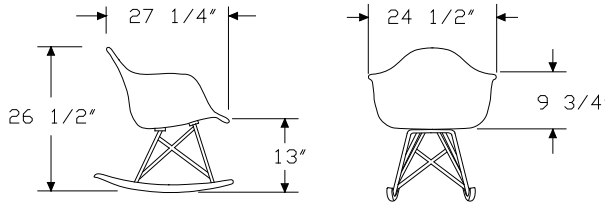

Specification Information

Step 1.		
RAR.		$627

Step 2. Base Finish		
47	trivalent chrome	+$0
BK	black	+$0

Step 3. Rocker Finish		
Z5	maple	+$0
OU	walnut	+$30

Step 4. Seat/Back Finish		
4T	aqua sky	+$0
5B	java	+$0
6Y	wafer	+$0
92	greystone	+$0
9J	sparrow	+$0
ZA	black	+$0
ZE	red	+$0
ZF	white	+$0
ZH	light blue	+$0
ZS	lime green	+$0

Eames® Molded Plywood Lounge Chair Metal Base

LCM.

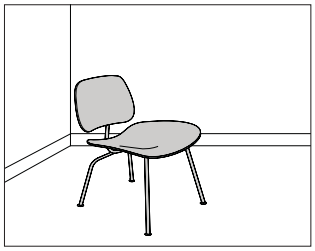

Product Information

Description

This 26½"-high molded plywood chair has natural face veneers, hardwood inner plies, and a 5-ply seat and back. It has a polished chrome-plated 4-leg base and self-leveling nylon glides. When upholstered, the back and seat shells have exposed veneer on their backside.

Notes

Red stain (11) shell finish is on birch veneer. This stain allows the wood grain to show through; inner plies are visible. Natural variations in wood grain may affect the appearance of this stain color.

Ebony (EN) shell finish is stain on ash veneer; inner plies are not as visible.

Black (BK) base finish has black glides. Trivalent chrome (47) base finish has white glides.

Avoid placement in direct sunlight.

Customer's Own Material (COM) requires 1 yard. Customer's Own Leather (COL), requires 14 square feet. See COM Information in Appendices for additional information.

Dimensions

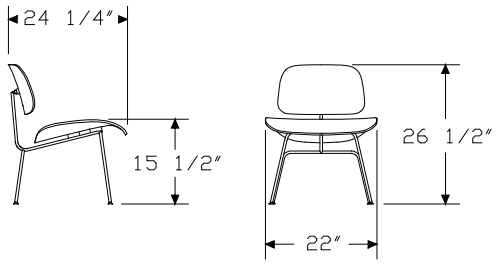

Specification Information

Step 1.

LC A

Step 2. Upholstery

M.	nonupholstered shell A	
M.U	upholstered shell A	

Prices for Steps 1-2.

LCM.	$628
LCM.U	$1271

Step 3. Base Finish

BK	black A	+$0
47	trivalent chrome A	+$20

Step 4. Shell Finish

Wood Veneer

OU	walnut A	+$0
CX	natural cherry A	+$35
11	red stain A	+$115
A2	white ash A	+$115
EN	ebony A	+$115
9N	santos palisander A	+$285

Step 5. Fabric

For upholstered shell (M.U)

Price Category 1 A	+$0
Price Category 2	+$26
Price Category 3	+$50
Price Category 4	+$75
Price Category 7 A	+$175
Price Category 11	+$560
Price Category E	+$105
Price Category F	+$145
Price Category G	+$247
Price Category H	+$277
Price Category I	+$310
Price Category J	+$341
Price Category K	+$375
Price Category L	+$420
Price Category M	+$471

Eames® Molded Plywood Lounge Chair Wood Base

LCW.

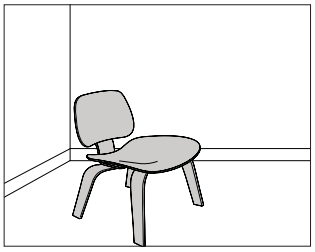

Product Information

Description

This 26½"-high molded plywood chair has natural face veneers, hardwood inner plies, a 5-ply seat and back, and 8-ply legs. When upholstered, the back and seat shells have exposed veneer on their backside.

Notes

Red stain (11) shell finish is on birch veneer. This stain allows the wood grain to show through; inner plies are visible. Natural variations in wood grain may affect the appearance of this stain color.

Ebony (EN) shell finish is stain on ash veneer; inner plies are not as visible.

Avoid placement in direct sunlight.

Customer's Own Material (COM) requires 1 yard. Customer's Own Leather (COL), requires 14 square feet. See COM Information in Appendices for additional information.

Dimensions

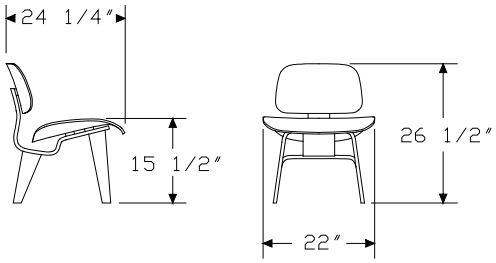

Specification Information

Step 1.

LC A

Step 2. Upholstery

W.	nonupholstered shell A	
W.U	upholstered shell A	

Prices for Steps 1-2.

LCW.	$919
LCW.U	$1568

Step 3. Finish

OU	walnut A	+$0
CX	natural cherry A	+$45
11	red stain A	+$154
A2	white ash A	+$154
EN	ebony A	+$154
9N	santos palisander A	+$575

Step 4. Fabric

For upholstered shell (W.U)

Price Category 1 A	+$0
Price Category 2	+$26
Price Category 3	+$50
Price Category 4	+$75
Price Category 7 A	+$175
Price Category 11	+$560
Price Category E	+$105
Price Category F	+$145
Price Category G	+$247
Price Category H	+$277
Price Category I	+$310
Price Category J	+$341
Price Category K	+$375
Price Category L	+$420
Price Category M	+$471

Eames® Chaise ES106

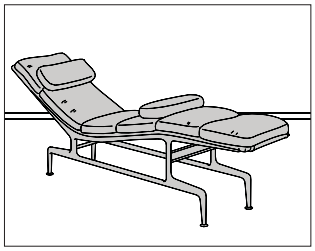

Product Information

Description

This chaise has 6 2"-thick foam cushions with leather upholstery supported by a fabric sling. It has nylon glides and includes 2 loose cushions.

Notes

When pearl MCL leather (1R01) is specified, the fabric sling will be white.

When black MCL leather (1R10) is specified, the fabric sling will be black.

Dimensions

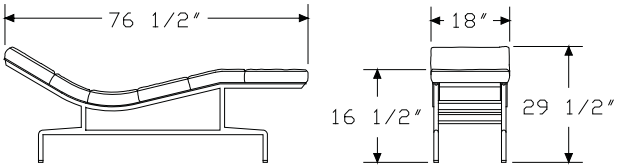

Specification Information

Step 1.

ES106 A		$5218

Step 2. Frame Finish

91	white A	+$450
EP	eggplant A	+$450
G2	graphite satin A	+$450

Step 3. Leather

See application chart and textiles list for fabric usage and numbers. First 2 digits of number indicate fabric line; remaining digit(s) indicate fabric color.

Price Category 11 +$1151

Nelson™ Coconut Lounge Chair 5569.

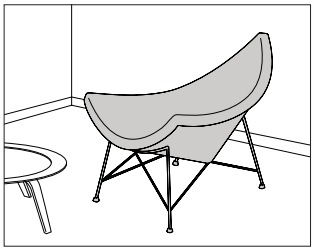

Product Information

Description

This chair has a 1-piece foam cushion upholstered in black leather, a white molded plastic shell, and a polished chrome base.

Dimensions

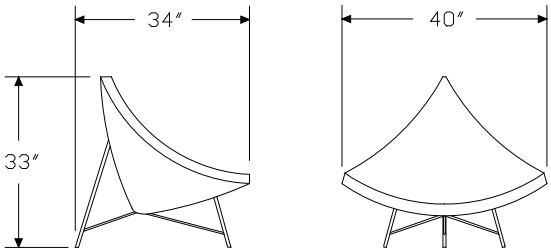

Specification Information

Step 1.

5569. A $5716

Paso Doble Chaise MGP40.

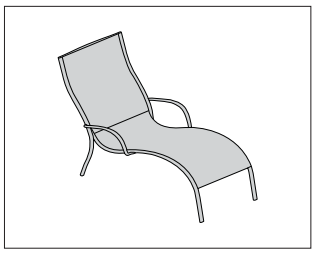

Product Information

Description

This stacking chaise lounge comes with an aluminum frame. The arms and crosspieces are made of die-cast aluminum. Chairs can stack up to 6 high.

Dimensions

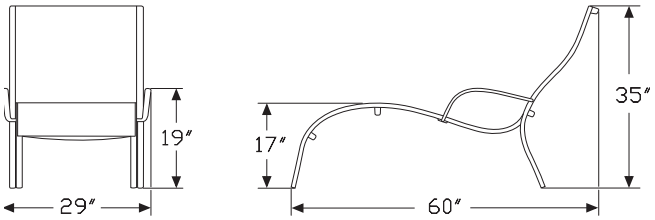

Specification Information

Step 1.

MGP40. A		$2533

Step 2. Frame Finish

YKB	black A	+$0
YKJ	white A	+$0
YKV	polished aluminum A	+$467

Step 3. Seat Fabric

For black (YKB)

YKM	black polymer A	+$0
YKC	black polyster-cotton A	+$35

For white (YKJ)

YKL	white polymer A	+$0

For polished aluminum (YKV)

YKC	black polyster-cotton A	+$0
YKR	white-black melange A	+$0
YKL	white polymer A	+$15
YKM	black polymer A	+$15

Paso Doble Lounge Chair MGP01.

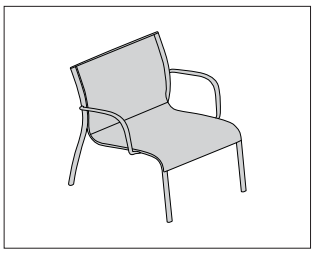

Product Information

Description

This stacking low chair comes with an aluminum frame and is available with or without arms. The arms and crosspieces are die-cast aluminum. Chairs can stack up to 6 high. Package contains 2 chairs.

Dimensions

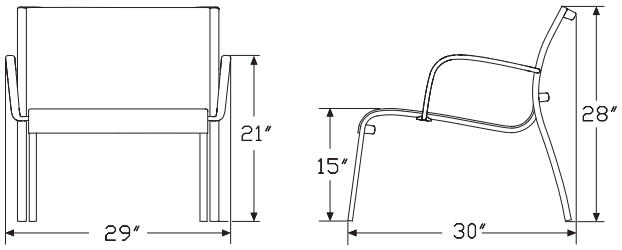

Specification Information

Step 1.

MGP01. A

Step 2. Arms

N	no arms	A
A	arms	A

Prices for Steps 1-2.

MGP01.	**N**	$1698
	A	$2244

Step 3. Frame Finish

		N	A
YKB	black A	+$0	0
YKJ	white A	+$0	0
YKV	polished aluminum A	+$458	498

Step 4. Seat Fabric

For black (YKB)

		N	A
YKM	black polymer A	+$0	0
YKC	black polyster-cotton A	+$42	82
YKP	black leather A	+$1312	1352

For white (YKJ)

YKL	white polymer A	+$0

For polished aluminum (YKV)

		N	A
YKL	white polymer A	+$0	0
YKM	black polymer A	+$0	0
YKC	black polyster-cotton A	+$40	40
YKR	white-black melange A	+$40	40
YKD	black leather A	+$1260	1310

Paso Doble Lounge Chair High Back MGP02.

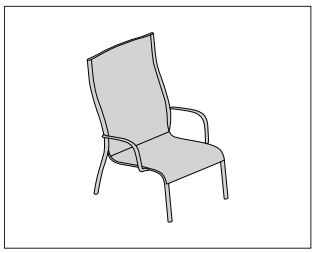

Product Information

Description

This stacking low chair with high back is available with or without arms. The frame is aluminum and the arms and crosspieces are die-cast aluminum. Chairs can stack up to 6 high. Package contains 2 chairs.

Dimensions

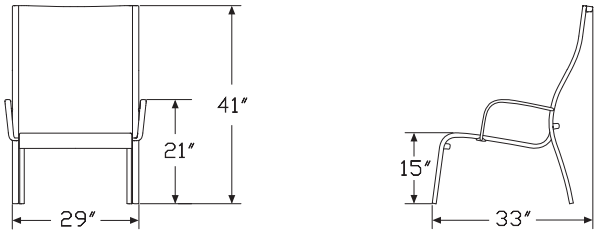

Specification Information

Step 1.

MGP02. A		$2450

Step 2. Frame Finish

YKB	black A	+$0
YKJ	white A	+$0
YKV	polished aluminum A	+$620

Step 3. Seat Fabric

For black (YKB)

YKM	black polymer A	+$0
YKC	black polyster-cotton A	+$40

For white (YKJ)

YKL	white polymer A	+$0

For polished aluminum (YKV)

YKL	white polymer A	+$0
YKM	black polymer A	+$0
YKC	black polyster-cotton A	+$80
YKR	white-black melange A	+$80

Paso Doble Ottoman MGP03.

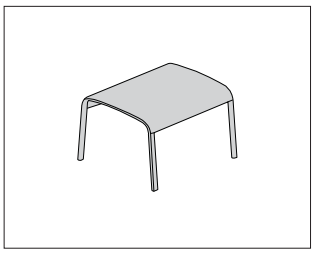

Product Information

Description

This footstool has an aluminum frame. The crosspieces are made of die-cast aluminum. Package contains 2 footstools.

Dimensions

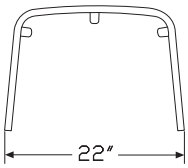

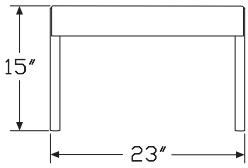

Specification Information

Step 1.

MGP03. A		$1278

Step 2. Frame Finish

YKB	black A	+$0
YKJ	white A	+$0
YKV	polished aluminum A	+$182

Step 3. Seat Fabric

For black (YKB)

YKM	black polymer A	+$0
YKC	black polyster-cotton A	+$40

For white (YKJ)

YKL	white polymer A	+$0

For polished aluminum (YKV)

YKL	white polymer A	+$0
YKM	black polymer A	+$0
YKC	black polyster-cotton A	+$40
YKR	white-black melange A	+$40

Spun Rotating Chair MGN00.

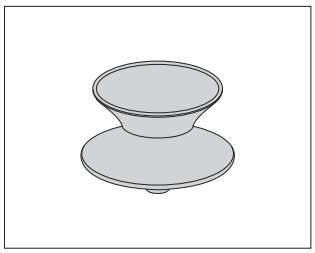

Product Information

Description

This rotating low chair is made from polypropylene.

Notes

Chair is suitable for outdoor use.

Dimensions

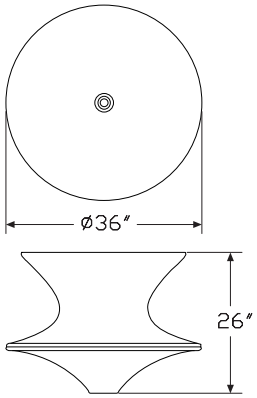

Specification Information

Step 1.

MGN00. A		$635

Step 2. Finish

YLB	dark purple A	+$0
YLC	purple A	+$0
YLD	red A	+$0
YLF	yellow A	+$0

Scissor Chair

SBSC-
SBSD-

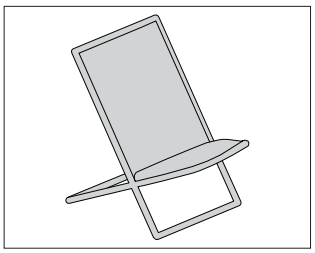

Product Information

Description

The frame of this chair is solid ash. The seat has foam and Dacron® over plywood. The back is FR foam over hardwood insert.

Notes

Customers Own Material (COM) requires 3½ yards. Customers Own Leather (COL) requires 58 square feet. See Order Information in Appendices.

Dimensions

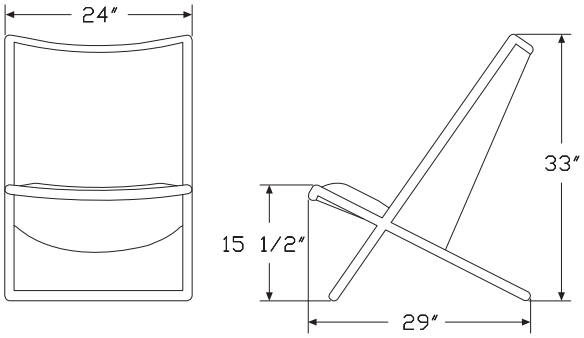

Specification Information

Step 1.

SBS A

Step 2. Frame

C-1098 solid ash A
D-1099 welded tubular steel A

Prices for Steps 1-2.

SBSC-1098	$2195
SBSD-1099	$2350

Step 3. Wood Finish

For solid ash (C-1098)

235	natural ash A	+$0
314	ebonized ash A	+$0
632	sundance anigre A	+$0
633	caramel anigre A	+$0
634	henna anigre A	+$0
643	caramel cherry A	+$0
644	henna cherry A	+$0
645	port cherry A	+$0
646	cocoa cherry A	+$0
654	henna sapele A	+$0
655	port sapele A	+$0
656	cocoa sapele A	+$0
657	espresso sapele A	+$0
673	caramel walnut A	+$0
674	henna walnut A	+$0
675	port walnut A	+$0
676	cocoa walnut A	+$0
2U	light brown walnut A	+$0
40	dark brown walnut A	+$0
EK	medium red walnut A	+$0
EY	light anigre A	+$0
UX	walnut on cherry A	+$0

Step 4. Upholstery	
COM (Geiger) A	+$0
COL (Geiger) A	+$293
Price Category (Geiger) A	+$193
Price Category (Geiger) B	+$210
Price Category (Geiger) C	+$228
Price Category (Geiger) D	+$263
Price Category (Geiger) F	+$333
Price Category (Geiger) G	+$368
Price Category (Geiger) H	+$403
Price Category (Geiger) J	+$455
Price Category (Geiger) K	+$508
Price Category (Geiger) L	+$560
Price Category (Geiger) M	+$630
Price Category (Geiger) P	+$770
Price Category (Geiger) Q	+$1463
Price Category (Geiger) Leather	+$2204

Step 5. Base Finish *For welded tubular steel (D-1099)*		
BNZ	bronze A	+$0
CHR	chrome A	+$0
SAC	satin chrome A	+$0

Step 6. Fire Retardancy		
NOCAL	not fire retardant A	+$0
133	fire retardant A	+$228

Sled Chair SBSU-

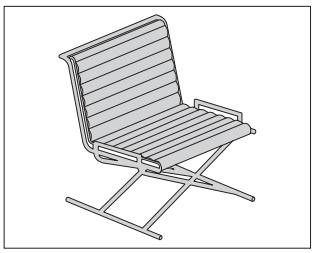

Product Information

Description

This chair has a welded tubular steel frame. The seat consists of foam and Dacron® over plywood. The back is FR foam over hardwood insert.

Notes

Customers Own Material (COM) requires 3 yards. Customers Own Leather (COL) requires 54 square feet. See Order Information in Appendices.

Dimensions

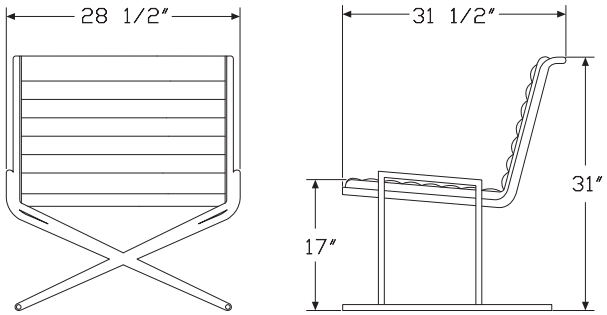

Specification Information

Step 1.

SBS A

Step 2. Material

U-1060 upholstery A

Prices for Steps 1-2.

SBSU-1060	$3735

Step 3. Upholstery

COM (Geiger) A	+$0
COL (Geiger) A	+$270
Price Category (Geiger) A	+$165
Price Category (Geiger) B	+$180
Price Category (Geiger) C	+$195
Price Category (Geiger) D	+$225
Price Category (Geiger) F	+$285
Price Category (Geiger) G	+$315
Price Category (Geiger) H	+$345
Price Category (Geiger) J	+$390
Price Category (Geiger) K	+$435
Price Category (Geiger) L	+$480
Price Category (Geiger) M	+$540
Price Category (Geiger) P	+$660
Price Category (Geiger) Q	+$1350
Price Category (Geiger) Leather	+$2052

Step 4. Base Finish

BNZ	bronze A	+$0
CHR	chrome A	+$0
SAC	satin chrome A	+$0

Step 5. Fire Retardancy

NOCAL	not fire retardant A	+$0
133	fire retardant A	+$195

Tuxedo Club Chair

ST1AN
ST1AQ
ST1NN
ST1NQ

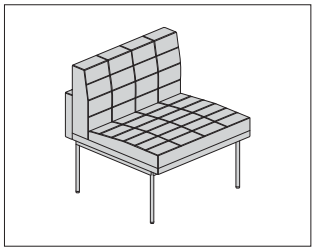

Product Information

Description

This club chair has a foam and Dacron® seat with a painted or plated steel base.

Dimensions

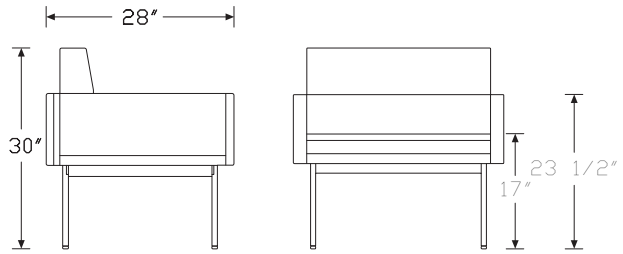

Specification Information

Step 1.

ST1 A

Step 2. Arms

N	no arms	A
A	arms	A

Step 3. Upholstery Type

N	not quilted	A
Q	quilted	A

Prices for Steps 1-3.

ST1NN	$1880
ST1NQ	$1950
ST1AN	$2450
ST1AQ	$2490

Step 4. Upholstery

	N	**A**
Price Category (Geiger) COM A	+$0	0
Price Category (Geiger) COL A	+$338	495
Price Category (Geiger) A	+$206	303
Price Category (Geiger) B	+$225	330
Price Category (Geiger) C	+$244	358
Price Category (Geiger) D	+$281	413
Price Category (Geiger) F	+$356	523
Price Category (Geiger) G	+$394	578
Price Category (Geiger) H	+$431	633
Price Category (Geiger) J	+$488	715
Price Category (Geiger) K	+$544	798
Price Category (Geiger) L	+$600	880
Price Category (Geiger) M	+$675	990
Price Category (Geiger) N	+$750	1100
Price Category (Geiger) P	+$825	1210
Price Category (Geiger) Q	+$1688	2475
Price Category (Geiger) Leather	+$2565	3762

Step 5. Base Finish

926	black A	+$0
AS	arctic silver A	+$0
WHT	white A	+$0
BNZ	bronze A	+$295
CHR	chrome A	+$295
SAC	satin chrome A	+$295

Step 6. Fire Retardancy

		N	A
NOCAL	not fire retardant A	+$0	0
133	fire retardant A	+$244	358

Tuxedo Ottoman

ST1BN
ST1BQ

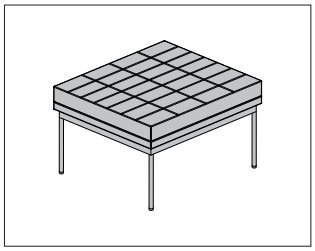

Product Information

Description

This 17"-high ottoman has a foam and Dacron® seat with a painted or plated steel base.

Dimensions

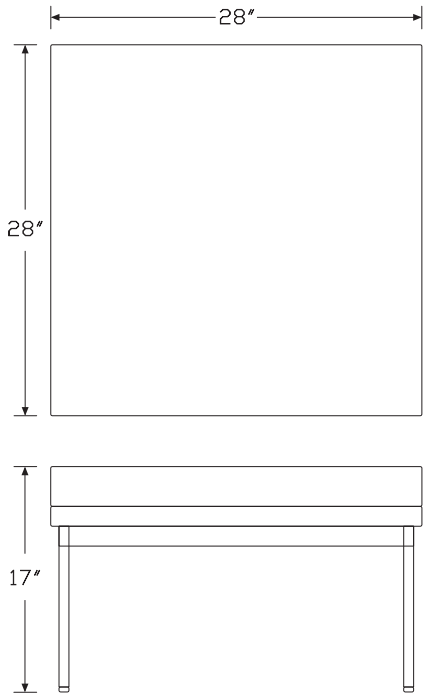

Specification Information

Step 1.

ST1B A

Step 2. Upholstery Type

N	not quilted A	
Q	quilted A	

Prices for Steps 1-2.

ST1BN	$1110
ST1BQ	$1130

Step 3. Upholstery

COM (Geiger) A	+$0
COL (Geiger) A	+$135
Price Category (Geiger) A	+$83
Price Category (Geiger) B	+$90
Price Category (Geiger) C	+$98
Price Category (Geiger) D	+$113
Price Category (Geiger) F	+$143
Price Category (Geiger) G	+$158
Price Category (Geiger) H	+$173
Price Category (Geiger) J	+$195
Price Category (Geiger) K	+$218
Price Category (Geiger) L	+$240
Price Category (Geiger) M	+$270
Price Category (Geiger) N	+$300
Price Category (Geiger) P	+$330
Price Category (Geiger) Q	+$675
Price Category (Geiger) Leather	+$1026

Step 4. Base Finish

926	black A	+$0
AS	arctic silver A	+$0
WHT	white A	+$0
BNZ	bronze A	+$295
CHR	chrome A	+$295
SAC	satin chrome A	+$295

Step 5. Fire Retardancy

NOCAL	not fire retardant A	+$0
133	fire retardant A	+$98

Tuxedo Daybed

ST3DN
ST3DQ

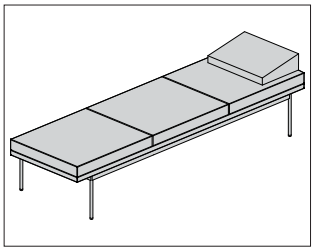

Product Information

Description

This 17″-high daybed has a foam and Dacron® seat with a painted or plated steel base.

Dimensions

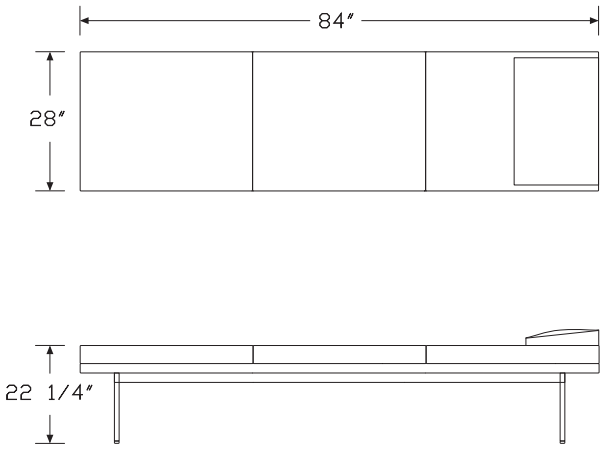

Specification Information

Step 1.

ST3D A

Step 2. Upholstery Type

N	not quilted A	
Q	quilted A	

Prices for Steps 1-2.

ST3DN	$2840
ST3DQ	$2900

Step 3. Upholstery

COM (Geiger) A	+$0
COL (Geiger) A	+$495
Price Category (Geiger) A	+$303
Price Category (Geiger) B	+$330
Price Category (Geiger) C	+$358
Price Category (Geiger) D	+$413
Price Category (Geiger) F	+$523
Price Category (Geiger) G	+$578
Price Category (Geiger) H	+$633
Price Category (Geiger) J	+$715
Price Category (Geiger) K	+$798
Price Category (Geiger) L	+$880
Price Category (Geiger) M	+$990
Price Category (Geiger) N	+$1100
Price Category (Geiger) P	+$1210
Price Category (Geiger) Q	+$2475
Price Category (Geiger) Leather	+$3762

Step 4. Base Finish

926	black A	+$0
AS	arctic silver A	+$0
WHT	white A	+$0
BNZ	bronze A	+$645
CHR	chrome A	+$645
SAC	satin chrome A	+$645

Step 5. Fire Retardancy

NOCAL	not fire retardant A	+$0
133	fire retardant A	+$358

Capelli Stool KC100.

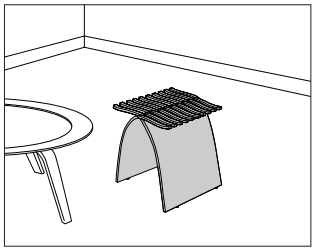

Product Information

Description

This stool has 2 molded plywood pieces that interlock to form a seat. The 2 pieces lock against one another for a strong and stable structure. The stool has 11 alternating light and dark hardwood inner plies with a light ash face veneer.

Notes

For shipping and storage, the stool unfolds and the 2 halves stack together. No tools or fasteners are required.

Dimensions

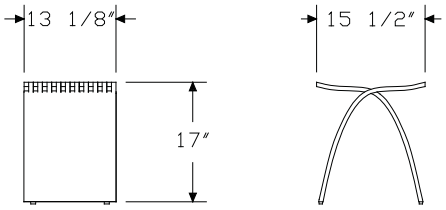

Specification Information

Step 1.

KC100. A		$620

Step 2. Finish

AV	light ash A	+$0

Eames® Walnut Stool

411
412
413

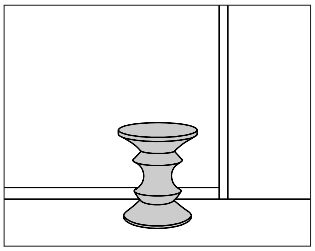

Product Information

Description

This solid walnut stool is available with 3 base shapes.

Dimensions

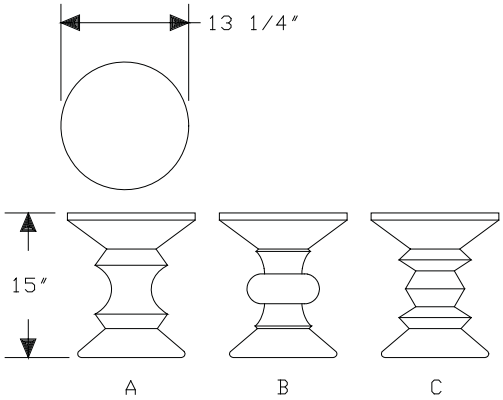

Specification Information

Step 1.

41 A

Step 2. Shape

1	a shape	A
2	b shape	A
3	c shape	A

Prices for Steps 1-2.

411	$995
412	$995
413	$995

Nelson™ Pedestal Stool PS16

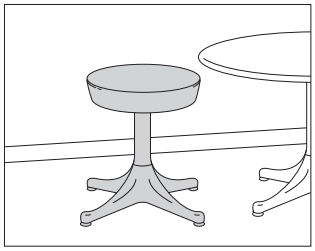

Product Information

Description

This 16"-high stool has a 4-star, aluminum base with adjustable glides and a 3"-thick upholstered foam seat.

Dimensions

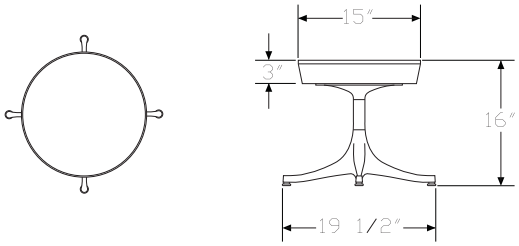

Specification Information

Step 1.

PS16 A		$850

Step 2. Base Finish

91	white A	+$0
98	studio white A	+$0
BK	black A	+$0
L	polished aluminum A	+$0

Step 3. Fabric

Price Category 1 A	+$0
Price Category 2	+$26
Price Category 3	+$50
Price Category 4	+$75
Price Category 7 A	+$175
Price Category 11	+$332
Price Category E	+$105
Price Category F	+$145
Price Category G	+$187
Price Category H	+$253
Price Category I	+$310
Price Category J	+$341
Price Category K	+$375
Price Category L	+$420
Price Category M	+$471

Al Bombo Stool MGB20.

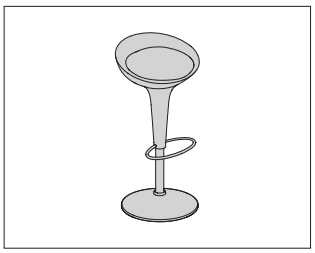

Product Information

Description

This swivel bar stool is available with a fixed height or an adjustable height with gas piston. The base, frame, footrest and handle are stainless steel. The seat is polished die-cast aluminum.

Notes

Stool is flame retardant.

Dimensions

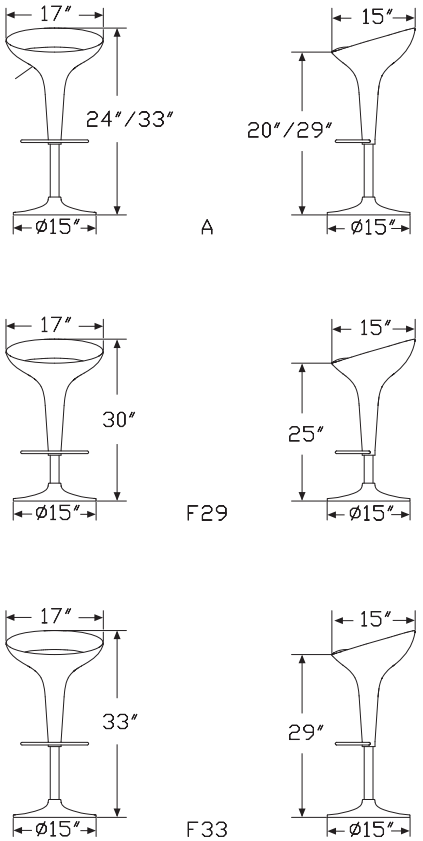

Specification Information

Step 1.

MGB20. A

Step 2. Height Adjustment

F33	fixed height, 33″ high A
F29	fixed height, 29″ high A
A	adjustable height A

Prices for Steps 1-2.

MGB20.	**F33**	$1437
	F29	$1437
	A	$1468

Al Bombo Kit MGB90.

Product Information

Description

This care kit is recommended to maintain brilliance of aluminum, which is likely to dull overtime.

Notes

Care kit contains:

- 1 tube of abrasive paste (250 gr.)
- 1 tube of protection paste (250 gr.)
- 1 set of special cleaning paper

Specification Information

Step 1.

MGB90. A $158

Bombo Stool MGB21.

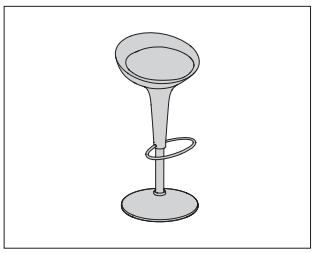

Product Information

Description

This swivel bar stool is available with a fixed height or an adjustable height with gas piston. The base is chromed steel, and the seat is ABS.

Dimensions

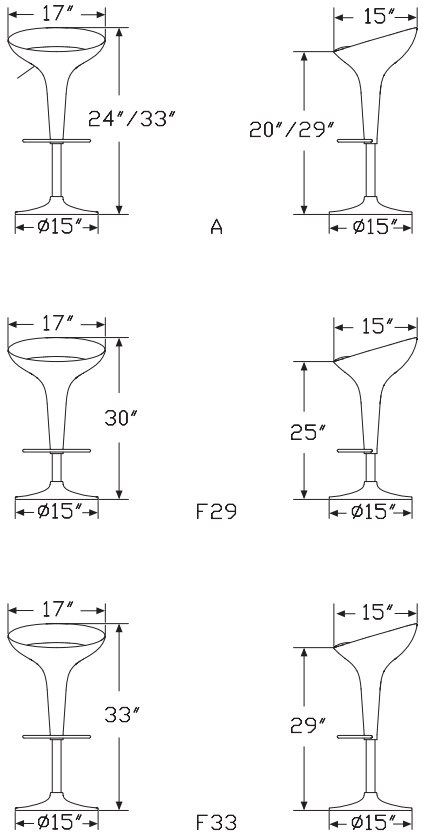

Specification Information

Step 1.

MGB21.

Step 2. Height Adjustment

F33	fixed height, 33″ high A
F29	fixed height, 29″ high A
A	adjustable height

Prices for Steps 1-2.

MGB21.F33		$807
	F29	$807
	A	$843

Step 3. Seat Finish

For adjustable height (A)

YDC	blue A	+$0
YDD	blue ultramarine A	+$0
YDF	brown A	+$0
YDH	copper A	+$61
YDJ	gold A	+$61
YDK	green A	+$0
YDM	grey anthracite	+$0
YDN	ivory A	+$0
YDP	lilac A	+$0
YDQ	metallic silver A	+$61
YDR	orange A	+$0
YDT	red A	+$0
YDW	white	+$0

For fixed height, 33" high (F33) or fixed height, 29" high (F29)

YDH	copper A	+$61
YDJ	gold A	+$61
YDM	grey anthracite A	+$0
YDQ	metallic silver A	+$61
YDW	white A	+$0

Bombo Special Stool MGB22.

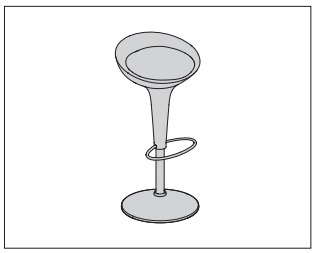

Product Information

Description

This swivel bar stool is available with a fixed height or an adjustable height with gas piston. The base, frame, footrest and handle are stainless steel. The seat is glossy ABS.

Notes

Stool is flame retardant.

Dimensions

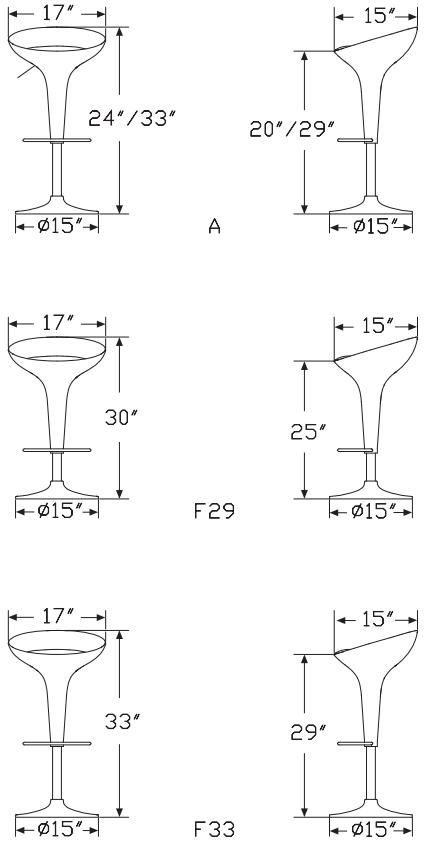

Specification Information

Step 1.

MGB22. A

Step 2. Height Adjustment

F33	fixed height, 33″ high A	
F29	fixed height, 29″ high A	
A	adjustable height A	

Prices for Steps 1-2.

MGB22.	**F33**	$1051
	F29	$1051
	A	$1061

Step 3. Seat Finish

YDB	black A	+$0
YDT	red A	+$0
YDW	white A	+$0

Deja-Vu Stool MGD20.

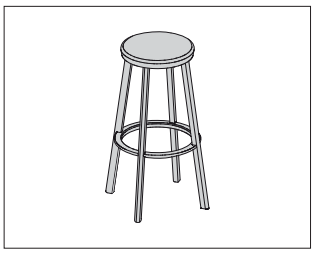

Product Information

Description

This bar stool is available in a high, medium, and low height. The seat and leg finishes are available in black, white, and polished aluminum.

Notes

Stool is flame retardant.

Dimensions

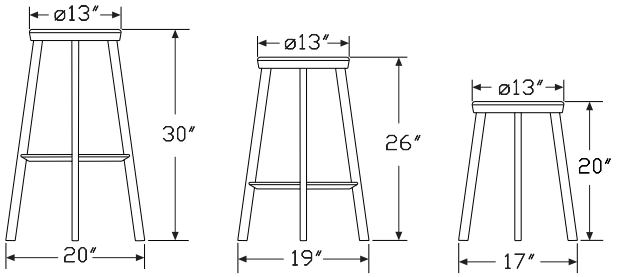

Specification Information

Step 1.

MGD20.

Step 2. Height

L	low height A
M	medium height A
H	high height

Prices for Steps 1-2.

MGD20.L		$366
	M	$481
	H	$501

Step 3. Seat/Leg Finish

		L	M	H
YFB	black A	+$0	0	0
YFH	white A	+$0	0	0
YFD	polished aluminum A	+$101	102	92

Lyra Stool MGL20.

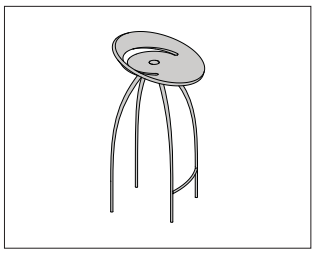

Product Information

Description

This stool comes in high, medium and low heights. The frame is a steel tube, available chromed or stained in epoxy resin grey anthracite. The seat is available in beech plywood, oak plywood stained wenge, and beech stained grey anthracite. Package contains 4 chairs.

Dimensions

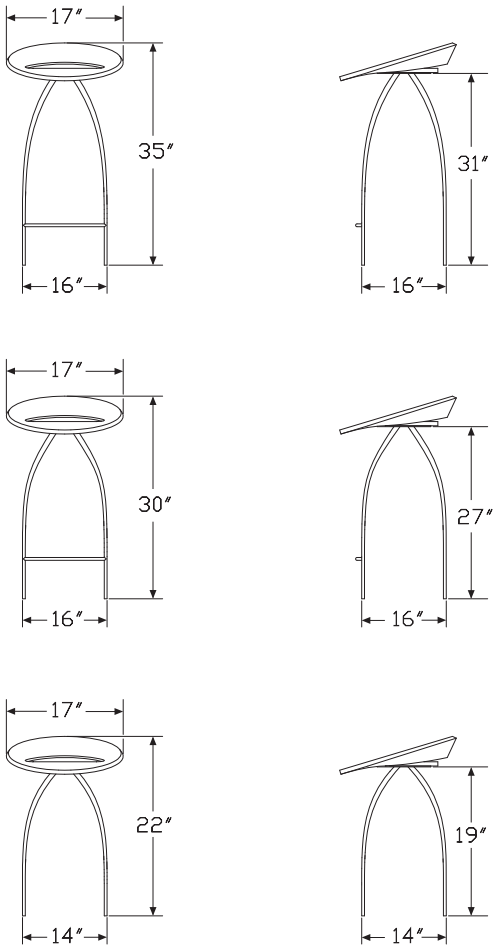

Specification Information

Step 1.

MGL20.

Step 2. Stool Height

L	low height [A]
M	medium height [A]
H	high height

Prices for Steps 1-2.

MGL20.L		$2020
	M	$2192
	H	$2236

Step 3. Frame Finish

YJG	chrome	+$0
YJH	grey anthracite [A]	+$0

Step 4. Seat Finish

		L	M	H
YJB	natural beech [A]	+$0	0	0
YJC	beech stained grey anthracite [A]	+$0	0	0
YJF	oak stained wenge [A]	+$80	64	64

Paso Doble Stool MGP20.

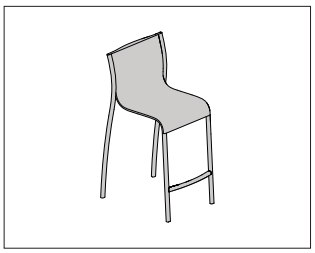

Product Information

Description

This stacking bar stool comes in high and medium height and is available with or with arms. The frame is aluminum, and the arms, crosspieces, and footrest are die-cast aluminum. Bar stools can stack up to 6 high. Package contains 2 bar stools.

Dimensions

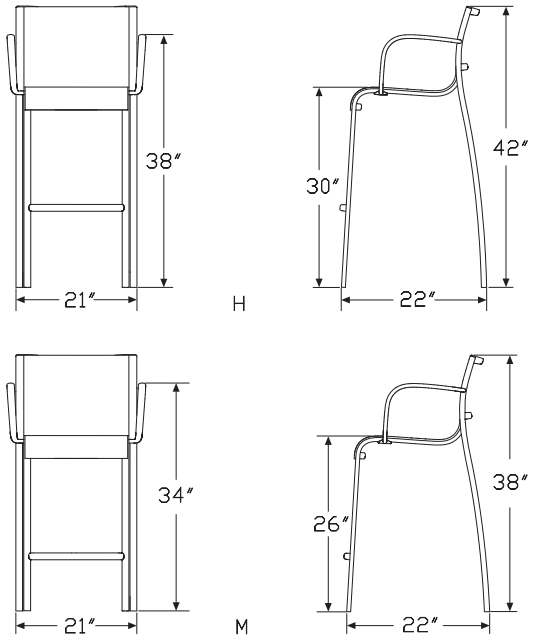

Specification Information

Step 1.

MGP20. A

Step 2. Height

H	high height A
M	medium height A

Step 3. Arms

N	no arms A
A	arms A

Prices for Steps 1-3.

		N	A
MGP20. H		$1442	1910
	M	$1396	1852

Step 4. Frame Finish

		HN	HA	MN	MA
YKB	black A	+$0	0	0	0
YKJ	white A	+$0	0	0	0
YKV	polished aluminum A	+$458	466	458	468

Step 5. Seat Fabric

For black (YKB)

		HN	HA	MN	MA
YKM	black polymer A	+$0	0	0	0
YKC	black polyster-cotton A	+$40	40	40	40
YKP	black leather A	+$1006	1086	1006	1098

For white (YKJ)

		HN	HA	MN	MA
YKL	white polymer A	+$0	0	0	0

For polished aluminum (YKV)

		HN	HA	MN	MA
YKL	white polymer A	+$0	0	0	0
YKM	black polymer A	+$0	0	0	0
YKC	black polyster-cotton A	+$40	40	40	50
YKF	green polyester-cotton A	+$40	40	40	50
YKG	orange polyester-cotton A	+$40	40	40	50
YKH	purple polyester-cotton A	+$40	40	40	50
YKR	white-black melange A	+$40	40	40	50
YKD	black leather A	+$1046	1026	1036	1026

Steelwood Stool MGS20.

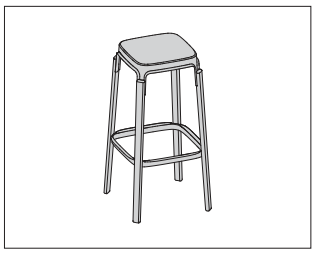

Product Information

Description

This bar stool is natural beech and comes in high and medium height. The included white seat and footrest consist of steel plates painted in epoxy resin. The legs are solid beech, available in natural or painted.

Dimensions

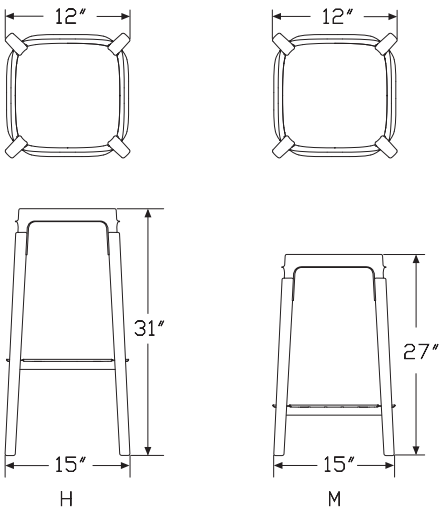

Specification Information

Step 1.

MGS20.

Step 2. Height

M	medium height
H	high height

Prices for Steps 1-2.

MGS20. M		$484
	H	$505

Step 3. Leg/Seat/Footrest Finish

YMB	black A	+$0
YMM	natural beech and white	+$0
YMD	red A	+$0
YMF	white A	+$0
YMK	natural beech and black A	+$0

Stool_One MGE20.

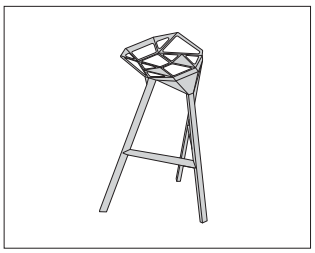

Product Information

Description

This bar stool comes in a high and medium height. The seat and leg finishes available are polished aluminum and anodised aluminum black. Bar stools can stack up to 4 high. Package contains 2 bar stools.

Notes

Stool is flame retardant.

Dimensions

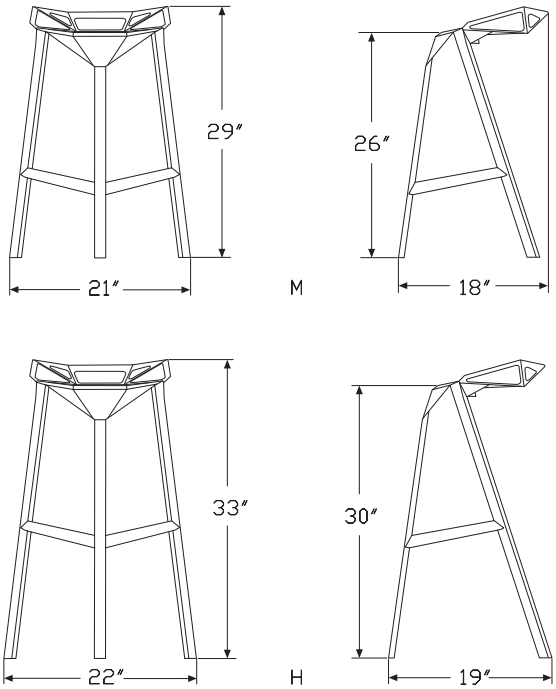

Specification Information

Step 1.

MGE20.

Step 2. Height

M medium height

H high height

Step 3. Leg Material

AM aluminum

AB anodised aluminum black

AL polished aluminum A

Prices for Steps 1-3.

		AM	AB	AL
MGE20.M		$908	958	1456
	H	$968	1008	1516

Step 4. Seat/Leg Finish

For aluminum (AM)

YHM	red	+$0
YHP	white	+$0

For anodised aluminum black (AB)

YHB	black	+$0

Nelson™ Platform Bench PB.

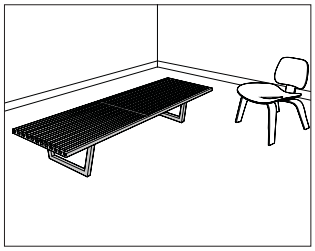

Product Information

Description

This solid maple bench has a slatted, clear-coat maple top and an ebonized wood or chrome metal base with metal leveling glides.

Dimensions

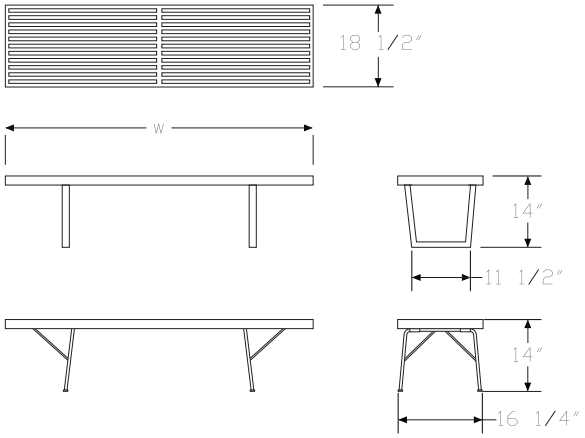

Specification Information

Step 1.

PB. A

Step 2. Width

48	48" wide A
60	60" wide A
72	72" wide A

Step 3. Base

M	chrome metal base A
W	ebonized wood base A

Prices for Steps 1-3.

		M	W
PB.	**48**	$974	839
	60	$1059	924
	72	$1146	1011

Step 4. Slat Finish

Z5	maple A	+$0

Nelson™ Platform Bench Cushion PBC.

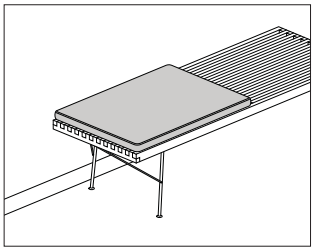

Product Information

Description

This upholstered cushion fits on a Nelson™ platform bench.

Dimensions

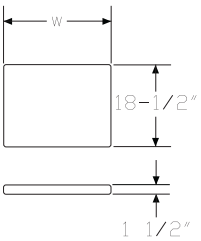

Specification Information

Step 1.

PBC. A

Step 2. Width

24 24" wide A

36 36" wide A

Step 3. Material

F fabric A

E felt A

Prices for Steps 1-3.

		F	E
PBC.	**24**	$400	400
	36	$600	600

Step 4. Finish

For felt (E)

		24	36
1M	orange crush A	+$50	65
2M	chartreuse A	+$50	65
3M	berry blue A	+$50	65

For fabric (F)

	24	36
Price Category 1 A	+$0	0
Price Category 7 A	+$70	85
Price Category 9	+$300	315

Tuxedo Bench

ST2BN
ST2BQ

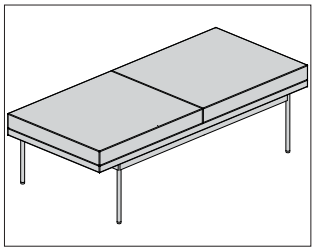

Product Information

Description

This 17"-high bench has a foam and Dacron® seat with a painted or plated steel base.

Dimensions

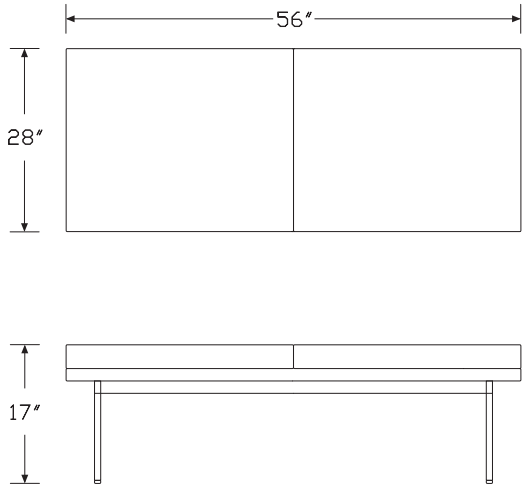

Specification Information

Step 1.

ST2B A

Step 2. Upholstery Type

N	not quilted A	
Q	quilted A	

Prices for Steps 1-2.

ST2BN	$1850
ST2BQ	$1910

Step 3. Upholstery

COM (Geiger) A	+$0
COL (Geiger) A	+$270
Price Category (Geiger) A	+$165
Price Category (Geiger) B	+$180
Price Category (Geiger) C	+$195
Price Category (Geiger) D	+$225
Price Category (Geiger) F	+$285
Price Category (Geiger) G	+$315
Price Category (Geiger) H	+$345
Price Category (Geiger) J	+$390
Price Category (Geiger) K	+$435
Price Category (Geiger) L	+$480
Price Category (Geiger) M	+$540
Price Category (Geiger) N	+$600
Price Category (Geiger) P	+$660
Price Category (Geiger) Q	+$1350
Price Category (Geiger) Leather	+$2052

Step 4. Base Finish

926	black A	+$0
AS	arctic silver A	+$0
WHT	white A	+$0
BNZ	bronze A	+$645
CHR	chrome A	+$645
SAC	satin chrome A	+$645

Step 5. Fire Retardancy

NOCAL	not fire retardant A	+$0
133	fire retardant A	+$195

Tuxedo Museum Bench

ST3BN
ST3BQ

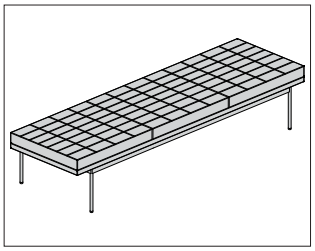

Product Information

Description

This 17″-high museum bench has a foam and Dacron® seat with a painted or plated steel base.

Dimensions

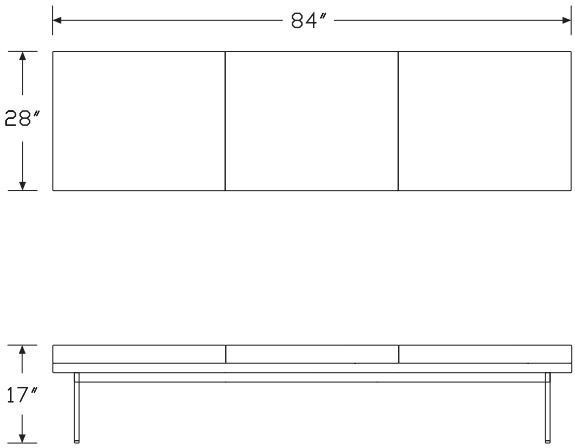

Specification Information

Step 1.

ST3B A

Step 2. Upholstery Type

N	not quilted A	
Q	quilted A	

Prices for Steps 1-2.

ST3BN	$2540
ST3BQ	$2600

Step 3. Upholstery

COM (Geiger) A	+$0
COL (Geiger) A	+$405
Price Category (Geiger) A	+$248
Price Category (Geiger) B	+$270
Price Category (Geiger) C	+$293
Price Category (Geiger) D	+$338
Price Category (Geiger) F	+$428
Price Category (Geiger) G	+$473
Price Category (Geiger) H	+$518
Price Category (Geiger) J	+$585
Price Category (Geiger) K	+$653
Price Category (Geiger) L	+$720
Price Category (Geiger) M	+$810
Price Category (Geiger) N	+$900
Price Category (Geiger) P	+$990
Price Category (Geiger) Q	+$2025
Price Category (Geiger) Leather	+$3078

Step 4. Base Finish

926	black A	+$0
AS	arctic silver A	+$0
WHT	white A	+$0
BNZ	bronze A	+$645
CHR	chrome A	+$645
SAC	satin chrome A	+$645

Step 5. Fire Retardancy

NOCAL	not fire retardant A	+$0
133	fire retardant A	+$293

Eames® Aluminum Group Executive Chair

EA337

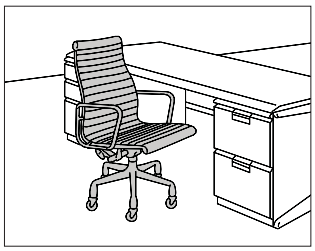

Product Information

Description

This high-back chair with arms has a lightweight aluminum frame with suspended upholstery. It has a 5-star base with casters, tilt-swivel mechanism, and manual seat-height adjustment or pneumatic seat-height adjustment and tilt lock feature.

Notes

Chair is tested and warranted for use by persons 300 pounds and under.

When chair is specified with Cygnus™ mesh, it meets CAL 133 requirements.

For description of casters, see Casters and Glides in Appendices.

Customer's Own Material (COM) requires 1½ yards. Customer's Own Leather (COL) requires 45 square feet. See Order Information in Appendices.

Dimensions

Manual

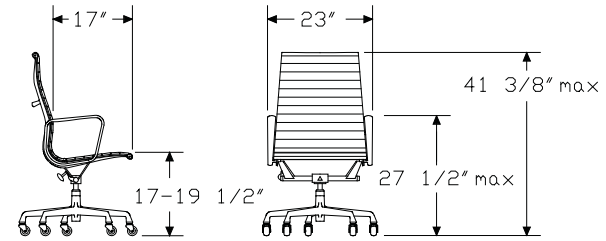

Pneumatic

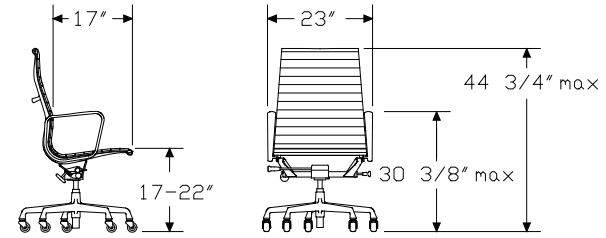

Specification Information

Step 1.

EA33 A

Step 2. Seat-Height Adjustment

7	manual seat-height adjustment A	
7P	pneumatic seat-height adjustment A	

Prices for Steps 1-2.

EA337	$1698
EA337P	$1850

Step 3. Casters

MD	2″ soft double wheel caster, hard floors or carpet, chrome A	+$0
UD	2″ hard double wheel caster, carpet, black painted A	+$0
VD	2″ hard double wheel caster, carpet, chrome A	+$0

Step 4. Base Finish

L	polished aluminum A	+$0
G2	graphite satin A	+$22

Step 5. Frame Finish

For polished aluminum (L)

L	polished aluminum A	+$0
91	white A	+$107

For graphite satin (G2)

G2	graphite satin A	+$86

Step 6. Fabric *See application chart and textiles list for fabric usage and numbers. First 2 digits of number indicate fabric line; remaining digit(s) indicate fabric color.*	
Price Category 1	+$0
Price Category 2	+$50
Price Category 3	+$113
Price Category 4	+$162
Price Category 7 A	+$240
Price Category 9	+$621
Price Category 11	+$768
Price Category B	+$51
Price Category E	+$127
Price Category F	+$118
Price Category H	+$304
Price Category I	+$323
Price Category K	+$399
Price Category R	+$1326
Price Category V	+$2434

Eames® Aluminum Group Management Chair

EA334
EA335

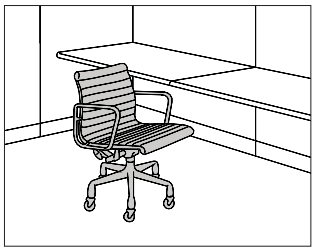

Product Information

Description

This low-back chair with arms has a lightweight aluminum frame with suspended upholstery. It has a 5-star base, tilt-swivel mechanism, and manual seat-height adjustment or pneumatic seat-height adjustment and tilt lock feature. The chair is available with casters or glides. The chair with glides includes 1/2″ (GD) glides for hard floors or carpet.

Notes

Chair is tested and warranted for use by persons 300 pounds and under.

When chair is specified with Cygnus™ mesh, it meets CAL 133 requirements.

For description of casters and glides, see Casters and Glides in Appendices.

Customer's Own Material (COM) requires 1 1/3 yards. Customer's Own Leather (COL) requires 45 square feet. See Order Information in Appendices.

Dimensions

Casters

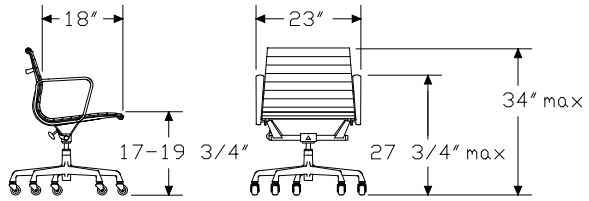

Glides

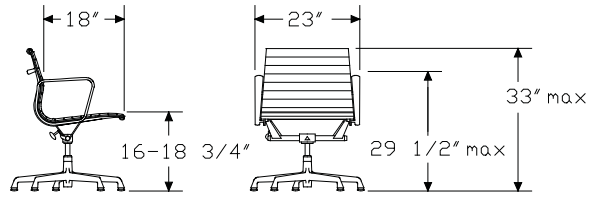

Pneumatic

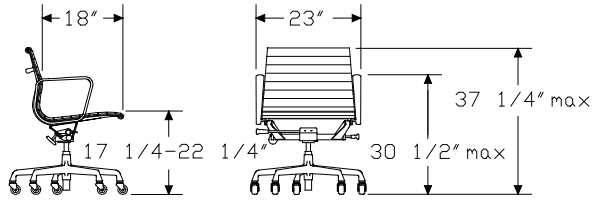

Specification Information

Step 1.

EA33 A

Step 2. Casters/Glides/Seat-Height Adjustment

5	casters with manual seat-height adjustment A	
4	glides with manual seat-height adjustment A	
5P	casters with pneumatic seat-height adjustment A	

Prices for Steps 1-2.

EA335	$1554
EA334	$1554
EA335P	$1706

Step 3. Casters

For casters with manual seat-height adjustment (5) or casters with pneumatic seat-height adjustment (5P)

MD	2″ soft double wheel caster, hard floors or carpet, chrome A	+$0
UD	2″ hard double wheel caster, carpet, black painted A	+$0
VD	2″ hard double wheel caster, carpet, chrome A	+$0

Step 4. Base Finish

L	polished aluminum A	+$0
G2	graphite satin A	+$22

Step 5. Frame Finish

For graphite satin (G2)

G2	graphite satin A	+$86

For polished aluminum (L)

L	polished aluminum A	+$0
91	white A	+$107

Step 6. Fabric

See application chart and textiles list for fabric usage and numbers. First 2 digits of number indicate fabric line; remaining digit(s) indicate fabric color.

Price Category 1	+$0
Price Category 2	+$43
Price Category 3	+$81
Price Category 4	+$125
Price Category 7 A	+$180
Price Category 9	+$591
Price Category 11	+$768
Price Category B	+$35
Price Category E	+$85
Price Category F	+$118
Price Category H	+$203
Price Category I	+$252
Price Category K	+$354
Price Category R	+$1287
Price Category V	+$2434

Eames® Soft Pad Group Executive Chair EA437

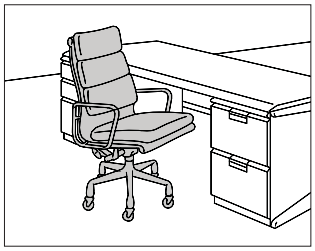

Product Information

Description

This high-back chair with arms has a lightweight aluminum frame and 2"-thick upholstered foam cushions. It has a 5-star base with casters, tilt-swivel mechanism, and manual seat-height adjustment or pneumatic seat-height adjustment and tilt lock feature.

Notes

Chair is tested and warranted for use by persons 300 pounds and under.

For description of casters, see Casters and Glides in Appendices.

Customer's Own Material (COM) requires 3 yards. Customer's Own Leather (COL) requires 56 square feet. See Order Information in Appendices.

Dimensions

Manual

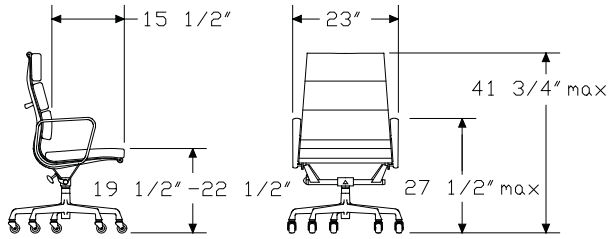

Pneumatic

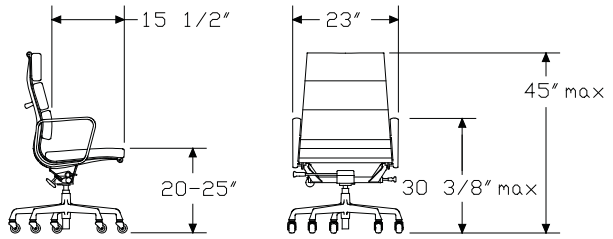

Specification Information

Step 1.

EA43 A

Step 2. Seat-Height Adjustment

7	manual seat-height adjustment A	
7P	pneumatic seat-height adjustment A	

Prices for Steps 1-2.

EA437	$2934
EA437P	$3086

Step 3. Casters

MD	2" soft double wheel caster, hard floors or carpet, chrome A	+$0
UD	2" hard double wheel caster, carpet, black painted A	+$0
VD	2" hard double wheel caster, carpet, chrome A	+$0

Step 4. Base Finish

L	polished aluminum A	+$0
G2	graphite satin A	+$22

Step 5. Frame Finish

For graphite satin (G2)

G2	graphite satin A	+$86

For polished aluminum (L)

L	polished aluminum A	+$0
91	white A	+$107

Step 6. Fabric *See application chart and textiles list for fabric usage and numbers. First 2 digits of number indicate fabric line; remaining digit(s) indicate fabric color.*	
Price Category 1	+$0
Price Category 2	+$63
Price Category 3	+$149
Price Category 4	+$238
Price Category 7 A	+$349
Price Category 9	+$608
Price Category 11	+$936
Price Category B	+$90
Price Category E	+$222
Price Category F	+$266
Price Category G	+$399
Price Category H	+$531
Price Category I	+$569
Price Category J	+$682
Price Category K	+$796
Price Category L	+$897
Price Category M	+$1126
Price Category R	+$2098
Price Category V	+$2434

Eames® Soft Pad Group Management Chair

EA434
EA435

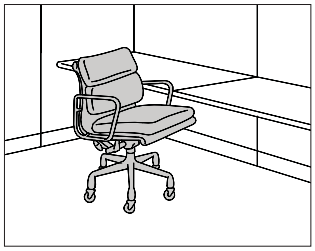

Product Information

Description

This low-back chair with arms has a lightweight aluminum frame and 2"-thick upholstered foam cushions. It has a 5-star base, tilt-swivel mechanism, and manual seat-height adjustment or pneumatic seat-height adjustment and tilt lock feature. The chair is available with casters or glides. The chair with glides includes 1/2" (GD) glides for hard floors or carpet.

Notes

Chair is tested and warranted for use by persons 300 pounds and under.

For description of casters and glides, see Casters and Glides in Appendices.

Customer's Own Material (COM) requires 2 1/2 yards. Customer's Own Leather (COL) requires 45 square feet. See Order Information in Appendices.

Dimensions

Casters

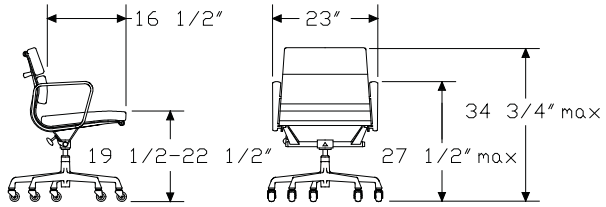

Glides

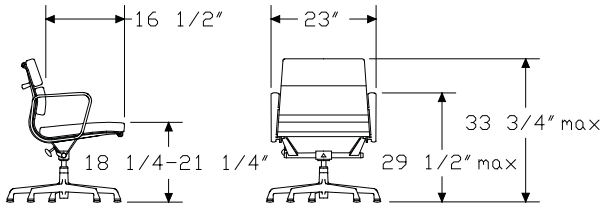

Pneumatic

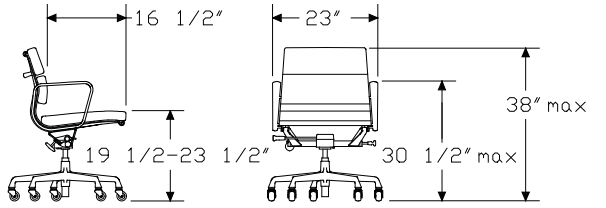

Specification Information

Step 1.

EA43 A

Step 2. Casters/Glides/Seat-Height Adjustment

5	casters with manual seat-height adjustment A	
4	glides with manual seat-height adjustment A	
5P	casters with pneumatic seat-height adjustment A	

Prices for Steps 1-2.

EA435	$2454
EA434	$2454
EA435P	$2607

Step 3. Casters

For casters with manual seat-height adjustment (5) or casters with pneumatic seat-height adjustment (5P)

MD	2″ soft double wheel caster, hard floors or carpet, chrome A	+$0
UD	2″ hard double wheel caster, carpet, black painted A	+$0
VD	2″ hard double wheel caster, carpet, chrome A	+$0

Step 4. Base Finish

L	polished aluminum A	+$0
G2	graphite satin A	+$22

Step 5. Frame Finish

For graphite satin (G2)

G2	graphite satin A	+$86

For polished aluminum (L)

L	polished aluminum A	+$0
91	white A	+$107

Step 6. Fabric

See application chart and textiles list for fabric usage and numbers. First 2 digits of number indicate fabric line; remaining digit(s) indicate fabric color.

Price Category 1	+$0
Price Category 2	+$63
Price Category 3	+$138
Price Category 4	+$212
Price Category 7 A	+$288
Price Category 9	+$574
Price Category 11	+$768
Price Category B	+$64
Price Category E	+$159
Price Category F	+$222
Price Category G	+$285
Price Category H	+$380
Price Category I	+$475
Price Category J	+$569
Price Category K	+$664
Price Category L	+$748
Price Category M	+$940
Price Category R	+$1320
Price Category V	+$2434

Eames® Executive Chair ES204

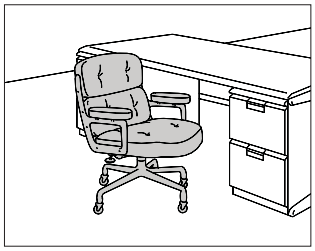

Product Information

Description

This upholstered chair has contoured seat and back cushions and padded armrests. The seat has a 4½"-thick foam cushion and the back has 2 3"-thick foam cushions. It has a 5-star base, tilt-swivel mechanism, and seat-height adjustment. The chair is available with casters or glides. The chair with glides includes ½" (GD) glides for hard floors or carpet.

Notes

Chair is tested and warranted for use by persons 300 pounds and under.

For description of casters and glides, see Casters and Glides in Appendices.

Customer's Own Material (COM) requires 3 yards. Customer's Own Leather (COL) requires 52 square feet. See Order Information in Appendices.

Dimensions

Casters

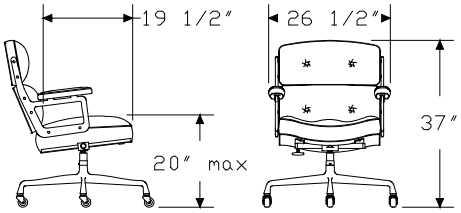

Glides

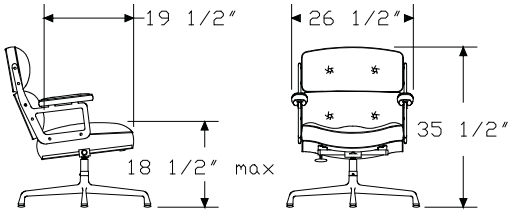

Specification Information

Step 1.

ES204 A		$3790

Step 2. Casters/Glides

GD	½" glide, hard floors or carpet A	+$0
MD	2" soft double wheel caster, hard floors or carpet, chrome A	+$0
UD	2" hard double wheel caster, carpet, black painted A	+$0
VD	2" hard double wheel caster, carpet, chrome A	+$0

Step 3. Base Finish

L	polished aluminum A	+$0
G2	graphite satin A	+$17

Step 4. Frame Finish

For graphite satin (G2)

G2	graphite satin A	+$66

For polished aluminum (L)

L	polished aluminum A	+$0
91	white A	+$82

Step 5. Fabric

See application chart and textiles list for fabric usage and numbers. First 2 digits of number indicate fabric line; remaining digit(s) indicate fabric color.

Price Category 1	+$0
Price Category 2	+$65
Price Category 3	+$149
Price Category 4	+$238
Price Category 7 A	+$349
Price Category 9	+$630
Price Category 11	+$851
Price Category B	+$90
Price Category E	+$222
Price Category F	+$288
Price Category G	+$399
Price Category H	+$531
Price Category I	+$616
Price Category J	+$739
Price Category K	+$862
Price Category L	+$972
Price Category M	+$1220
Price Category R	+$2098
Price Category V	+$2434

Eames® Sofa Compact 473

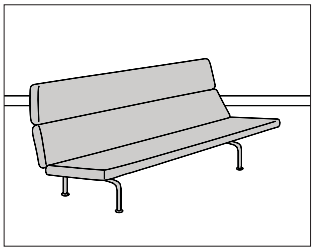

Product Information

Description

This sofa has 2½"-thick upholstered foam cushions supported by a black enameled frame. It has polished chrome-plated legs and stainless steel glides. All fabrics are railroaded.

Notes

Customer's Own Material (COM) requires 6 yards. See Order Information in Appendices.

Dimensions

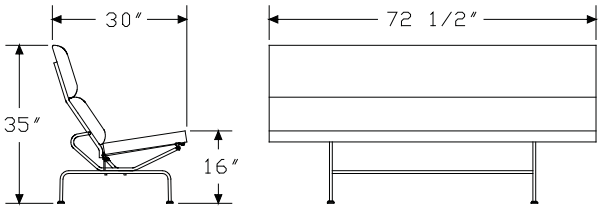

Specification Information

Step 1.

473 A	$4304

Step 2. Fabric

See application chart and textiles list for fabric usage and numbers. First 2 digits of number indicate fabric line; remaining digit(s) indicate fabric color.

Price Category 1	+$0
Price Category 2	+$88
Price Category 3	+$121
Price Category 4	+$229
Price Category B	+$152
Price Category E	+$380
Price Category F	+$531
Price Category G	+$682
Price Category H	+$909
Price Category I	+$1137
Price Category J	+$1363
Price Category K	+$1590
Price Category L	+$1792
Price Category M	+$2249

Eames® Sofa

ES108
ES110

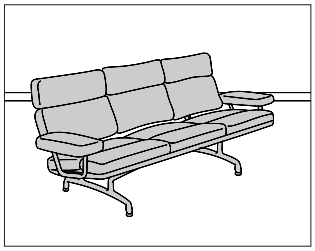

Product Information

Description

This sofa has 2"-thick upholstered foam cushions and a polished chrome-plated frame with nylon glides. The back panels are hand-finished solid walnut or solid teak.

Notes

Customer's Own Material (COM) requires 4½ yards for 2-seat sofa and 6½ yards for 3-seat sofa. Customer's Own Leather (COL) requires 100 square feet for 2-seat sofa and 125 square feet for 3-seat sofa. See Order Information in Appendices.

Dimensions

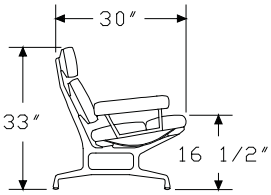

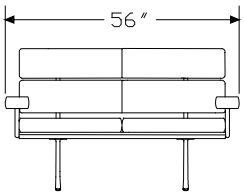

2 Seat

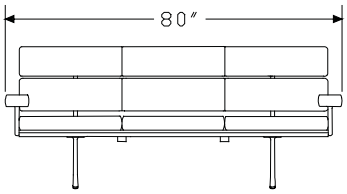

3 Seat

Specification Information

Step 1.

ES1 A

Step 2. Number of Seats

08	3 seats A	
10	2 seats A	

Prices for Steps 1-2.

ES108	$9964
ES110	$8912

Step 3. Back Finish

		08	**10**
OU	walnut A	+$0	0
OT	teak A	+$775	725

Step 4. Base Finish

CD	polished aluminum A	+$0

Step 5. Fabric

See application chart and textiles list for fabric usage and numbers. First 2 digits of number indicate fabric line; remaining digit(s) indicate fabric color.

	08	**10**
Price Category 1 A	+$0	0
Price Category 3	+$185	164
Price Category 4	+$302	247
Price Category 7 A	+$608	516
Price Category 9	+$1611	1271
Price Category 11	+$2255	1729
Price Category G	+$785	641
Price Category H	+$1518	1140
Price Category I	+$1898	1362
Price Category J	+$2222	1597
Price Category K	+$2548	1830
Price Category L	+$2871	2063
Price Category M	+$3196	2295
Price Category R	+$3790	2602
Price Category V	+$6084	4056

Goetz™ Sofa GS100.

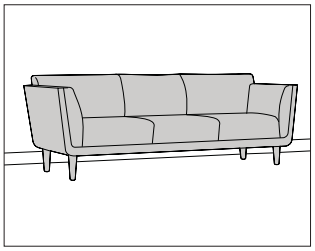

Product Information

Description

This sofa has a molded veneer frame that wraps around the sides and back. It has 7″-thick upholstered foam cushions and 4 polished cast-aluminum legs with nonadjustable nylon glides.

Notes

Customer's Own Material (COM) requires 10 yards. Customer's Own Leather (COL) requires 156 square feet. See Order Information in Appendices.

Dimensions

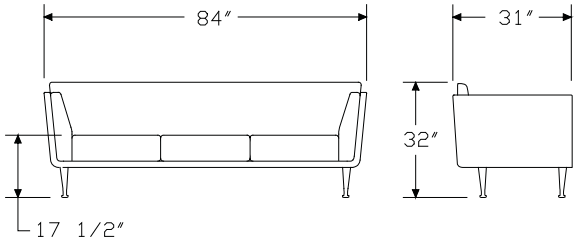

Specification Information

Step 1.

GS100. A		$4960

Step 2. Frame Finish

OU	walnut A	+$0
CX	natural cherry A	+$50
EN	ebony A	+$50
A2	white ash A	+$225
9N	santos palisander A	+$3305

Step 3. Seat/Back Fabric

See application chart and textiles list for fabric usage and numbers. First 2 digits of number indicate fabric line; remaining digit(s) indicate fabric color.

Price Category 1	+$0
Price Category 2	+$171
Price Category 3	+$196
Price Category 4	+$275
Price Category 7 A	+$523
Price Category 9	+$1383
Price Category 11	+$2075
Price Category B	+$127
Price Category E	+$316
Price Category F	+$443
Price Category G	+$569
Price Category H	+$758
Price Category I	+$948
Price Category J	+$1137
Price Category K	+$1326
Price Category L	+$1495
Price Category M	+$1877
Price Category R	+$2340
Price Category V	+$3651

Step 4. Accent Fabric *See application chart and textiles list for fabric usage and numbers. First 2 digits of number indicate fabric line; remaining digit(s) indicate fabric color.*	
Price Category 1	+$0
Price Category 2	+$171
Price Category 3	+$196
Price Category 4	+$275
Price Category 7 A	+$523
Price Category 9	+$1383
Price Category 11	+$2075
Price Category B	+$127
Price Category E	+$316
Price Category F	+$443
Price Category G	+$569
Price Category H	+$758
Price Category I	+$948
Price Category J	+$1137
Price Category K	+$1326
Price Category L	+$1495
Price Category M	+$1877
Price Category R	+$2340
Price Category V	+$3651

Nelson™ Marshmallow Sofa 5670

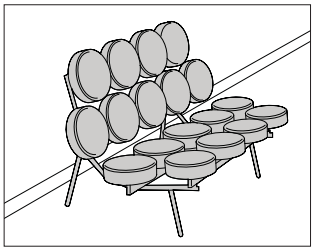

Product Information

Description

This upholstered sofa has 18 circular cushions on the back and seat, a brushed-finish tubular-steel frame, and black-satin-finish legs.

Notes

Customer's Own Material (COM) requires 3¾ yards. Customer's Own Leather (COL) requires 62 square feet. See Order Information in Appendices.

Dimensions

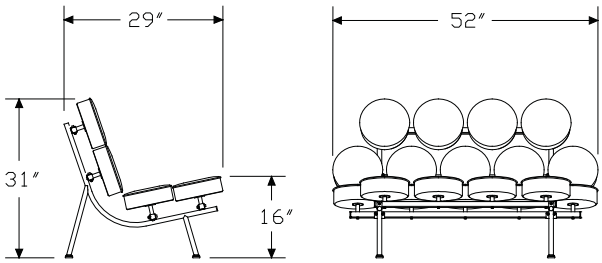

Specification Information

Step 1.

5670 A	$4163

Step 2. Fabric

See application chart and textiles list for fabric usage and numbers. First 2 digits of number indicate fabric line; remaining digit(s) indicate fabric color.

Price Category 1	+$0
Price Category 2	+$0
Price Category 7 A	+$1000
Price Category 9	+$1400
Price Category 11	+$1540
Price Category R	+$1956
Price Category V	+$2434

Tuxedo Sofa

ST3AN
ST3AQ
ST3NN
ST3NQ

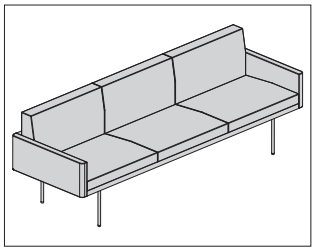

Product Information

Description

This sofa has a foam and Dacron® seat with a painted or plated steel base.

Dimensions

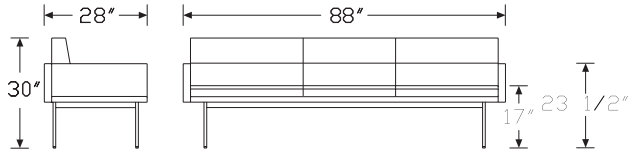

Specification Information

Step 1.

ST3 A

Step 2. Arms

N	no arms	A
A	arms	A

Step 3. Upholstery Type

N	not quilted	A
Q	quilted	A

Prices for Steps 1-3.

ST3NN	$4580
ST3NQ	$4730
ST3AN	$5140
ST3AQ	$5300

Step 4. Upholstery

		N	A
Price Category (Geiger) COM	A	+$0	0
Price Category (Geiger) COL	A	+$1015	1170
Price Category (Geiger) A		+$619	715
Price Category (Geiger) B		+$675	780
Price Category (Geiger) C		+$731	845
Price Category (Geiger) D		+$844	975
Price Category (Geiger) F		+$1069	1235
Price Category (Geiger) G		+$1181	1365
Price Category (Geiger) H		+$1294	1495
Price Category (Geiger) J		+$1463	1690
Price Category (Geiger) K		+$1631	1885
Price Category (Geiger) L		+$1800	2080
Price Category (Geiger) M		+$2025	2340
Price Category (Geiger) N		+$2250	2600
Price Category (Geiger) P		+$2475	2860
Price Category (Geiger) Q		+$5075	5850
Price Category (Geiger) Leather		+$7714	8892

Step 5. Base Finish

926	black	A	+$0
AS	arctic silver	A	+$0
WHT	white	A	+$0
BNZ	bronze	A	+$645
CHR	chrome	A	+$645
SAC	satin chrome	A	+$645

Step 6. Fire Retardancy		N	A
NOCAL	not fire retardant A	+$0	0
133	fire retardant A	+$732	845

Tuxedo Settee

ST2AN
ST2AQ
ST2NN
ST2NQ

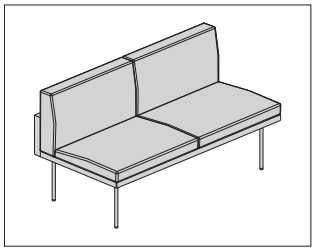

Product Information

Description

This settee has a foam and Dacron® seat with a painted or plated steel base.

Dimensions

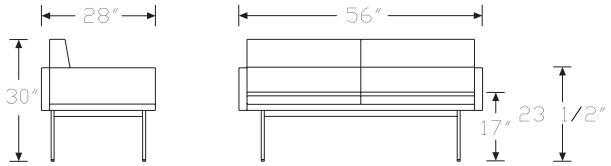

Specification Information

Step 1.

ST2 A

Step 2. Arms

N	no arms	A
A	arms	A

Step 3. Upholstery Type

N	not quilted	A
Q	quilted	A

Prices for Steps 1-3.

ST2NN	$3270
ST2NQ	$3320
ST2AN	$3770
ST2AQ	$3900

Step 4. Upholstery

		N	A
Price Category (Geiger) COM	A	+$0	0
Price Category (Geiger) COL	A	+$675	835
Price Category (Geiger) A		+$413	509
Price Category (Geiger) B		+$450	555
Price Category (Geiger) C		+$488	601
Price Category (Geiger) D		+$563	694
Price Category (Geiger) F		+$713	879
Price Category (Geiger) G		+$788	971
Price Category (Geiger) H		+$863	1064
Price Category (Geiger) J		+$975	1203
Price Category (Geiger) K		+$1088	1341
Price Category (Geiger) L		+$1200	1480
Price Category (Geiger) M		+$1350	1665
Price Category (Geiger) N		+$1500	1850
Price Category (Geiger) P		+$1650	2035
Price Category (Geiger) Q		+$3375	4175
Price Category (Geiger) Leather		+$5130	6346

Step 5. Base Finish

926	black	A	+$0
AS	arctic silver	A	+$0
WHT	white	A	+$0
BNZ	bronze	A	+$645
CHR	chrome	A	+$645
SAC	satin chrome	A	+$645

Step 6. Fire Retardancy		N	A
NOCAL	not fire retardant A	+$0	0
133	fire retardant A	+$488	602

Tuxedo Corner Sofa with Attached Settee

ST2MN
ST2MQ

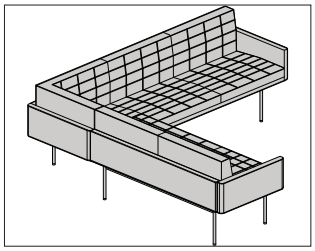

Product Information

Description

This corner sofa with attached settee has a foam and Dacron® seat with a painted or plated steel base.

Dimensions

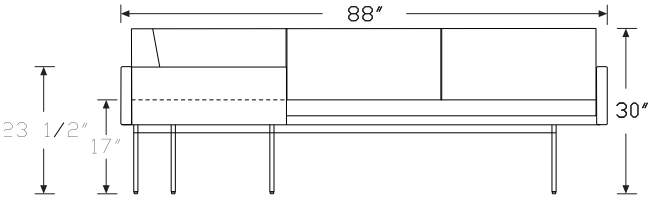

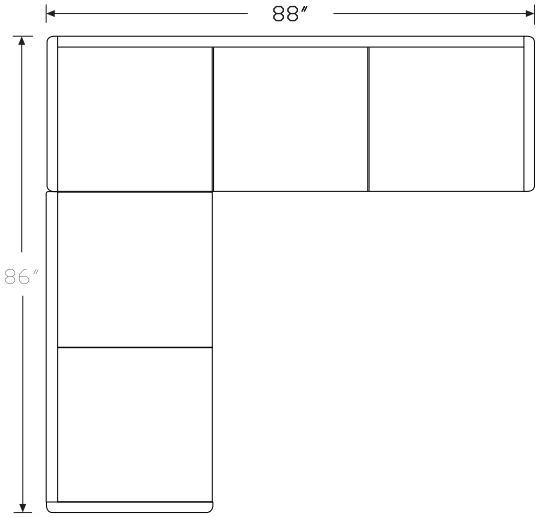

Specification Information

Step 1.

ST2M A

Step 2. Upholstery Type

N-	not quilted A	
Q-	quilted A	

Step 3. Settee Position

L	corner sofa right, settee left A	
R	corner sofa left, settee right A	

Prices for Steps 1-3.

ST2MN-	**L**	$9050
	R	$9050
ST2MQ-	**L**	$9325
	R	$9325

Step 4. Upholstery

COM (Geiger) A	+$0
COL (Geiger) A	+$2025
Price Category (Geiger) A	+$1238
Price Category (Geiger) B	+$1350
Price Category (Geiger) C	+$1463
Price Category (Geiger) D	+$1688
Price Category (Geiger) F	+$2138
Price Category (Geiger) G	+$2363
Price Category (Geiger) H	+$2588
Price Category (Geiger) J	+$2925
Price Category (Geiger) K	+$3263
Price Category (Geiger) L	+$3600
Price Category (Geiger) M	+$4050
Price Category (Geiger) N	+$4500
Price Category (Geiger) P	+$4950
Price Category (Geiger) Q	+$10125
Price Category (Geiger) Leather	+$15390

Step 5. Base Finish

926	black A	+$0
AS	arctic silver A	+$0
WHT	white A	+$0
BNZ	bronze A	+$1290
CHR	chrome A	+$1290
SAC	satin chrome A	+$1290

Tuxedo Corner Sofa with Attached Settee *continued*

Step 6. Fire Retardancy		
NOCAL	not fire retardant A	+$0
133	fire retardant A	+$1463

Tuxedo Corner Sofa with Attached Sofa

ST3MN
ST3MQ

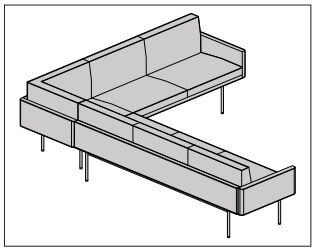

Product Information

Description

This corner sofa with attached sofa has a foam and Dacron® seat with a painted or plated steel base.

Dimensions

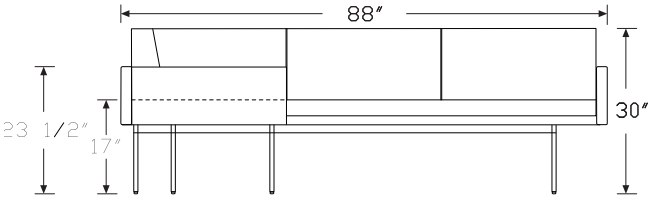

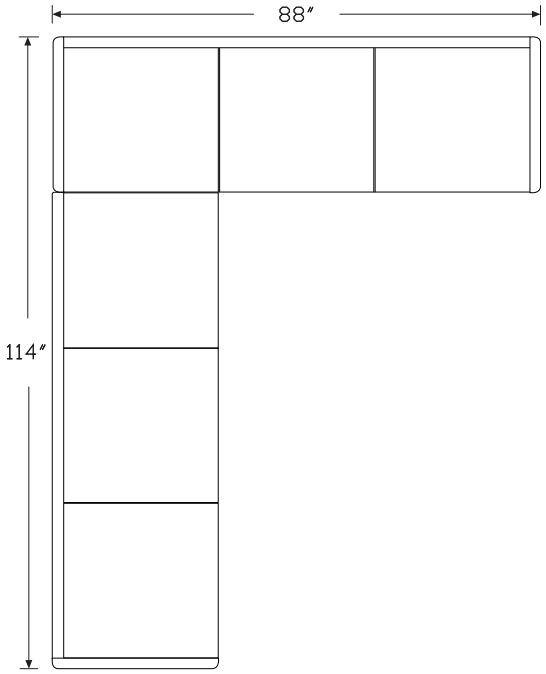

Specification Information

Step 1.

ST3M A

Step 2. Upholstery Type

N-	not quilted	A
Q-	quilted	A

Step 3. Sofa Position

L	corner sofa right, sofa left	A
R	corner sofa left, sofa right	A

Prices for Steps 1-3.

ST3MN-	**L**	$10420
	R	$10420
ST3MQ-	**L**	$10730
	R	$10730

Step 4. Upholstery

COM (Geiger) A	+$0
COL (Geiger) A	+$2340
Price Category (Geiger) A	+$1430
Price Category (Geiger) B	+$1560
Price Category (Geiger) C	+$1690
Price Category (Geiger) D	+$1950
Price Category (Geiger) F	+$2470
Price Category (Geiger) G	+$2730
Price Category (Geiger) H	+$2990
Price Category (Geiger) J	+$3380
Price Category (Geiger) K	+$3770
Price Category (Geiger) L	+$4160
Price Category (Geiger) M	+$4680
Price Category (Geiger) N	+$5200
Price Category (Geiger) P	+$5720
Price Category (Geiger) Q	+$11700
Price Category (Geiger) Leather	+$17784

Step 5. Base Finish

926	black A	+$0
AS	arctic silver A	+$0
WHT	white A	+$0
BNZ	bronze A	+$1290
CHR	chrome A	+$1290
SAC	satin chrome A	+$1290

Tuxedo Corner Sofa with Attached Sofa *continued*

Step 6. Fire Retardancy		
NOCAL	not fire retardant A	+$0
133	fire retardant A	+$1690

Desks

Tables

Occasional Tables

Eames® Desk Unit

EDU10.
EDU20.
EDU21.

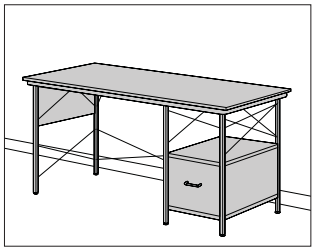

Product Information

Description

This desk unit has a powder-coated or zinc-coated steel frame, a birch top, painted side panels, with either open storage or a birch-front file drawer on the left or right side. It has adjustable glides.

Dimensions

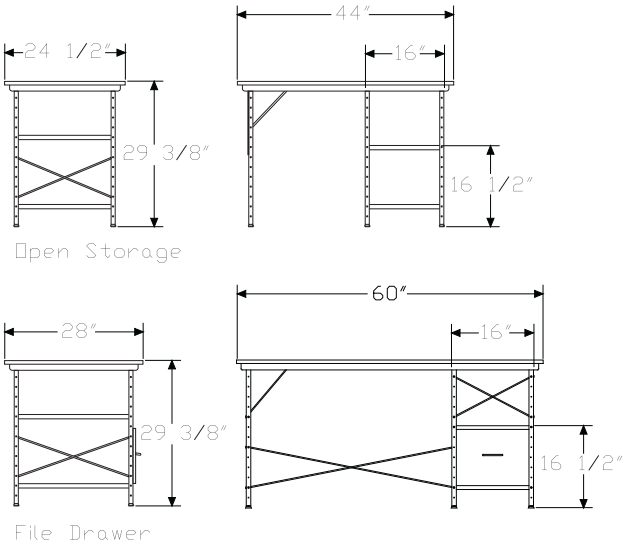

Specification Information

Step 1.

EDU A

Step 2. File Drawer

10.	open storage A	
20.	right-hand file drawer A	
21.	left-hand file drawer A	

Prices for Steps 1-2.

EDU10.	$1620
EDU20.	$1720
EDU21.	$1720

Step 3. Frame Finish

ZC	zinc plated A	+$0
BK	black A	+$95

Step 4. Surface Finish

NC	natural color A	+$0
W9	multi-color A	+$0

Nelson™ Swag Leg Desk NS585

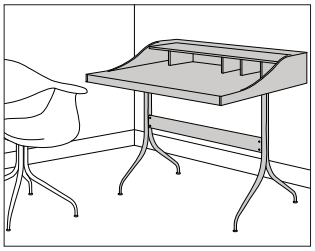

Product Information

Description

This 34½"-high desk has a white-laminate top surface, solid walnut side and back panels, 4 hardwood dividers, and 2 black-plastic pencil drawers. The base is chrome-finished steel tubing with a solid walnut stretcher and adjustable glides. The desk also has a grommet for cable management. Shipped knocked down.

Notes

Hardwood divider colors include 2 orange, 1 spa blue, and 1 chartreuse.

Dimensions

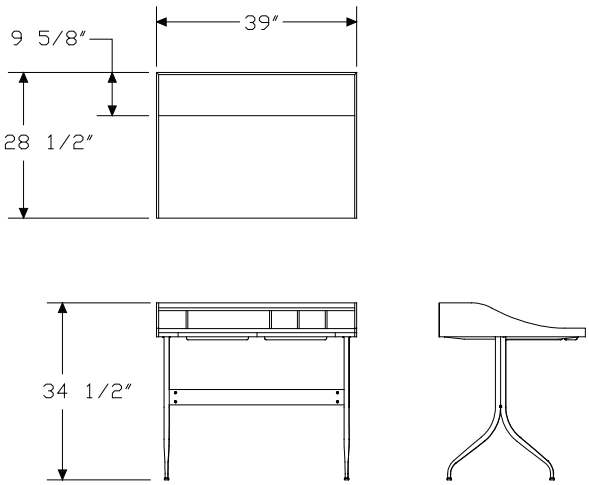

Specification Information

Step 1.

NS5850	A	$2397

Burdick Group® Beam

BG101
BG102
BG105
BG106

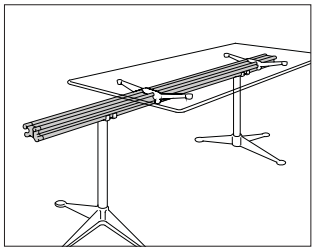

Product Information

Description

This structural beam supports Burdick Group products. The beam is polished aluminum and has a cable management channel on the underside. The connecting beam forms a right angle with another beam and includes attachment hardware.

Notes

To support primary beam, order double-base assembly (BG103) separately.

For connecting beam, order following products separately:

- Beam (BG101 or BG102)
- Single-base assembly (BG107)

Dimensions

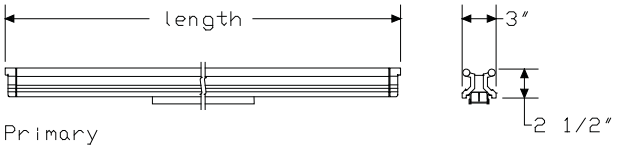

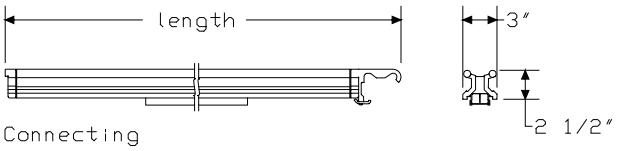

Specification Information

Step 1.

BG10 A

Step 2. Type/Length

6	connecting and 5′ 6″ long A	
5	connecting and 7′ long A	
1	primary and 7′ long A	
2	primary and 10′ long A	

Prices for Steps 1-2.

BG106	$1211
BG105	$1500
BG101	$1299
BG102	$1541

Step 3. Top Finish

BU	black umber A	+$0

Burdick Group® Base Assembly

BG103
BG107

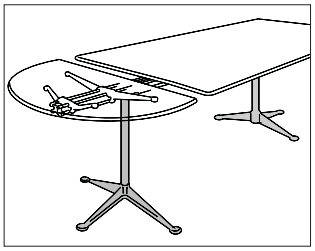

Product Information

Description

This base structure supports a primary or connecting beam and has a vertical cable management package. The base is polished aluminum. Attachment hardware is included. Shipped knocked down.

The single-base assembly cannot be used with a primary beam. The double-base assembly cannot be used with a connecting beam.

Notes

For single-base assembly, order connecting beam (BG105 or BG106) separately.

For double-base assembly, order primary beam (BG101 or BG102) separately.

When 2 cable management packages are required for double-base assembly, order cable management accessory package (BG210) separately.

Dimensions

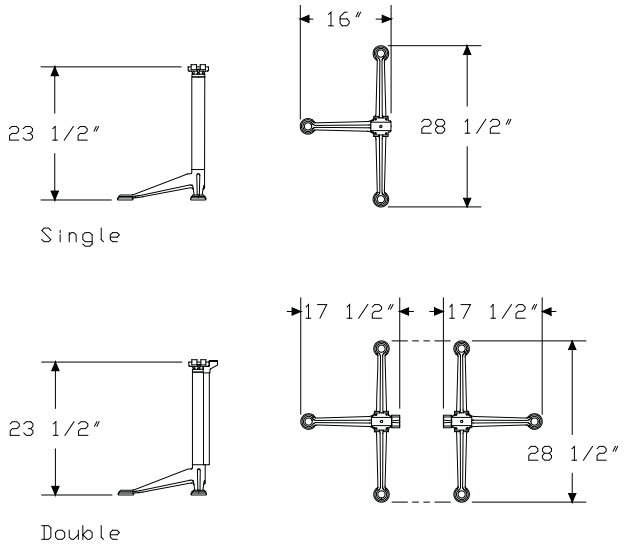

Specification Information

Step 1.

BG10 A

Step 2. Configuration

7	single A	
3	double A	

Prices for Steps 1-2.

BG107	$723
BG103	$1299

Step 3. Column Finish

BU	black umber A	+$0

Burdick Group® Cable Management Accessory Package

BG210

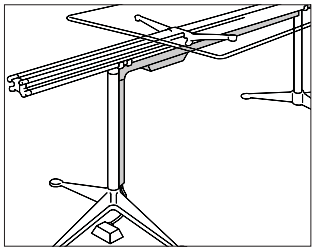

Product Information

Description

This accessory package attaches to a primary beam when more than 1 cable management package is required. It has a vertical cable manager, elbow, and amphenol cover. A cable management package is included with each single- and double-base assembly.

Dimensions

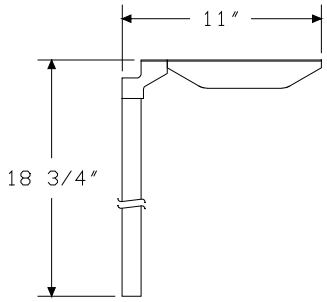

Specification Information

Step 1.

BG210 A		$117

Step 2. Trim Finish

BU	black umber A	+$0

Burdick Group® Round Work Surface

BG117
BG122

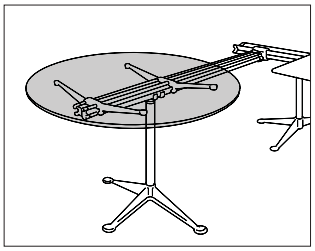

Product Information

Description

This 48″-diameter work surface attaches to a beam. It has a laminate top and black thermoplastic edge, or a glass top. Attachment brackets are included.

Dimensions

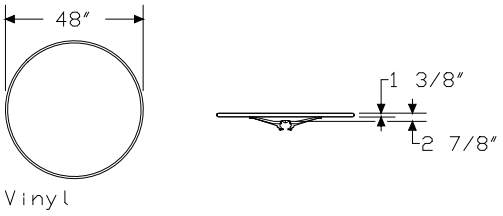

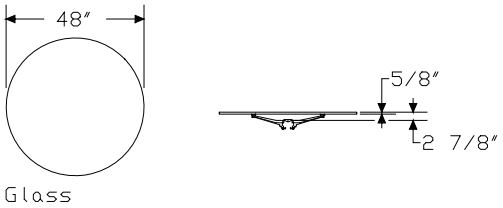

Specification Information

Step 1.

BG1 A

Step 2. Material

17	black thermoplastic edge A	
22	glass A	

Prices for Steps 1-2.

BG117	$1038
BG122	$1922

Step 3. Top Finish

For black thermoplastic edge (17)

Solid-Color Laminate Top/Black Edge

BU	black umber A	+$0
HT	inner tone A	+$0

Step 4. Bracket Finish

BU	black umber A	+$0
CD	polished aluminum A	+$0

Burdick Group® Rectangular Work Surface

BG115
BG116
BG120
BG121

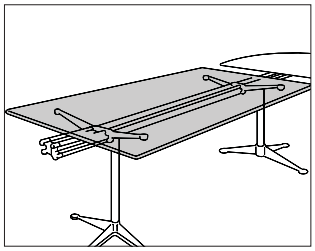

Product Information

Description

This 60"-wide work surface attaches to a beam. It has a laminate top and black thermoplastic edge or a glass top. Attachment brackets are included.

Dimensions

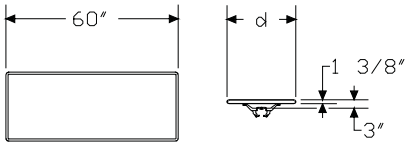

Vinyl

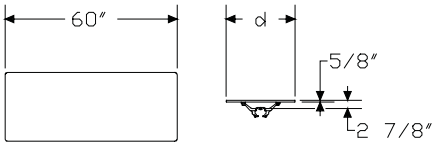

Glass

Specification Information

Step 1.

BG1 A

Step 2. Material/Depth

16	black thermoplastic edge and 24" deep A	
15	black thermoplastic edge and 36" deep A	
21	glass and 24" deep A	
20	glass and 36" deep A	

Prices for Steps 1-2.

BG116	$756
BG115	$953
BG121	$1315
BG120	$1725

Step 3. Top Finish

For black thermoplastic edge and 24" deep (16) or black thermoplastic edge and 36" deep (15)

Solid-Color Laminate Top/Black Edge

BU	black umber A	+$0
HT	inner tone A	+$0

Step 4. Bracket Finish

BU	black umber A	+$0
CD	polished aluminum A	+$0

Burdick Group® 1/2-Round Work Surface

BG118
BG123
BG127

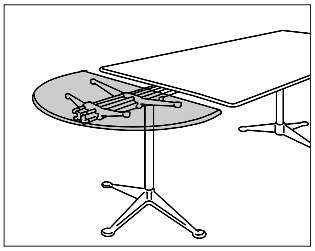

Product Information

Description

This 36"-diameter surface attaches to a beam. Its top surface is either laminate with black edge band, glass, or stone. Attachment brackets are included.

Notes

Natural characteristics in stone cause variations in hues, veins, crystals, and distinctive marks. These variations and subtle changes seen as the stone ages are values associated with natural materials. No two tabletops are identically the same; variations in both color and veining are to be expected. Over time the stone may fade in color, staining of the surface may appear, and surface cracks-if not already visible at time of purchase-may appear. Small cracks do not affect the structure of the tabletop.

Dimensions

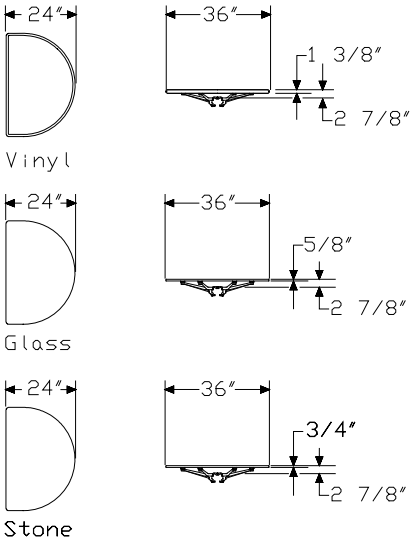

Specification Information

Step 1.

BG1 A

Step 2. Material

18	black thermoplastic edge A	
23	glass A	
27	stone A	

Prices for Steps 1-2.

BG118	$653
BG123	$1161
BG127	$3165

Step 3. Top Finish

Solid-Color Laminate Top/Black Edge

For black thermoplastic edge (18)

BU	black umber A	+$0
HT	inner tone A	+$0

Top/Edge Finish:

For stone (27)

5U	georgia grey marble A	+$336
HR	wisconsin black marble A	+$948
DP	georgia white marble A	+$1151
FX	quebec graphite granite A	+$1151

Step 4. Bracket Finish

BU	black umber A	+$0
CD	polished aluminum A	+$0

Eames® Table Universal Base Round

ET101
ET102
ET301
ET302

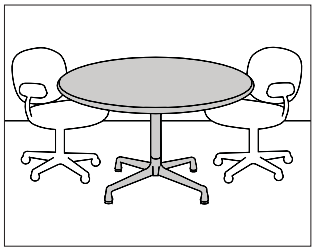

Product Information

Description

This table has a laminate or veneer top and vinyl edge or a veneer top and edge. The vinyl-edge table has a 7/8"-thick laminate top or 3/4"-thick veneer top. The veneer-edge table has a 3/4"-thick veneer top. Each table has adjustable glides. Shipped knocked down.

Dimensions

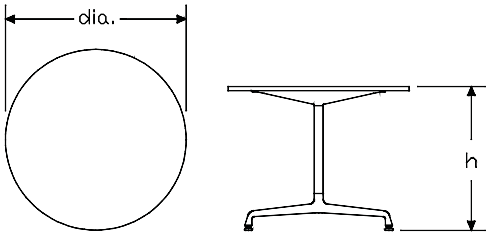

Specification Information

Step 1.

ET

Step 2. Height

3	16" high
1	28 1/2" high

Step 3. Diameter

01	30" diameter
02	36" diameter

Step 4. Surface Material

L	laminate top with thermoplastic edge
C	veneer top with thermoplastic edge A
W	veneer top with veneer edge A

Prices for Steps 1-4.

ET301	**L**	$640
	C	$747
	W	$849
ET302	**L**	$640
	C	$747
	W	$849
ET101	**L**	$640
	C	$747
	W	$849
ET102	**L**	$640
	C	$747
	W	$849

Eames® Table Universal Base
Round *continued*

Step 5.

Top Finish: Solid-Color Laminate
For laminate top with thermoplastic edge (L)

8Q	folkstone grey	+$0
91	white	+$0
98	studio white	+$0
CL	cool grey neutral	+$0
HF	inner tone light	+$0
HT	inner tone	+$0
LT	light tone	+$0
LU	soft white	+$0
WL	sandstone	+$0
WN	warm grey neutral	+$0

Top Finish: Fiber Laminate
For laminate top with thermoplastic edge (L)

1X	vanilla	+$0
2X	wheat	+$0
3X	celery	+$0
4X	coriander	+$0
5X	chamomile	+$0
6X	cinnamon	+$0
7X	cardamom	+$0
8X	kale	+$0

Top Finish: Frosted Laminate
For laminate top with thermoplastic edge (L)

J4	frosted light grey	+$0
J5	frosted inner tone light	+$0
J6	frosted slate grey	+$0
J7	frosted medium tone	+$0
J8	frosted black	+$0

Top Finish: Recut Veneer
For veneer top with thermoplastic edge (C)

RA	light ash A	+$0
RK	mahogany dark A	+$0
RM	mahogany A	+$0

Top Finish: Wood Veneer
For veneer top with thermoplastic edge (C)

V2	beech A	+$80
V3	cherry A	+$80
Z3	warm red cherry A	+$80
Z5	maple A	+$80
A2	white ash A	+$105
2U	light brown walnut A	+$105
ED	aged cherry A	+$105
40	dark brown walnut A	+$105
EG	medium brown walnut A	+$105
EK	medium red walnut A	+$105
EY	light anigre A	+$105
UL	natural maple A	+$105
UQ	light cherry A	+$105
UV	red cherry A	+$105
UX	walnut on cherry A	+$105
9N	santos palisander A	+$380

Top/Edge Finish: Recut Veneer
For veneer top with veneer edge (W)

RA	light ash A	+$0
RK	mahogany dark A	+$0
RM	mahogany A	+$0

Top/Edge Finish: Wood Veneer
For veneer top with veneer edge (W)

V2	beech A	+$80
V3	cherry A	+$80
Z3	warm red cherry A	+$80
Z5	maple A	+$80
A2	white ash A	+$105
2U	light brown walnut A	+$105
ED	aged cherry A	+$105
40	dark brown walnut A	+$105
EG	medium brown walnut A	+$105
EK	medium red walnut A	+$105
EY	light anigre A	+$105
UL	natural maple A	+$105
UQ	light cherry A	+$105
UV	red cherry A	+$105
UX	walnut on cherry A	+$105
9N	santos palisander A	+$380

Eames® Table Universal Base Round *continued*

Step 6. Edge Finish		
For laminate top with thermoplastic edge (L) or veneer top with thermoplastic edge (C)		
8Q	folkstone grey	+$0
91	white	+$0
98	studio white	+$0
BK	black	+$0
BU	black umber	+$0
CL	cool grey neutral	+$0
CM	cinnamon	+$0
CO	chamomile	+$0
HF	inner tone light	+$0
LT	light tone	+$0
LU	soft white	+$0
MT	medium tone	+$0
SG	slate grey	+$0
WA	wheat	+$0
WL	sandstone	+$0
WN	warm grey neutral	+$0

Step 7. Column Finish		
91	white A	+$0
BK	black A	+$0
BU	black umber A	+$0
CL	cool grey neutral A	+$0
G2	graphite satin A	+$0
HF	inner tone light A	+$0
LT	light tone A	+$0
LU	soft white A	+$0
MT	medium tone A	+$0
SG	slate grey A	+$0
WN	warm grey neutral A	+$0
CN	metallic champagne A	+$10
EH	metallic bronze A	+$10
MS	metallic silver A	+$10

Step 8. Base Finish		
91	white A	+$0
BK	black A	+$0
BU	black umber A	+$0
CL	cool grey neutral A	+$0
G2	graphite satin A	+$0
HF	inner tone light A	+$0
LT	light tone A	+$0
LU	soft white A	+$0
MT	medium tone A	+$0
PA	polished aluminum A	+$0
SG	slate grey A	+$0
WN	warm grey neutral A	+$0
CN	metallic champagne A	+$10
EH	metallic bronze A	+$10
MS	metallic silver A	+$10

Eames® Round Table, Universal Base

ET601
ET602
ET801
ET802

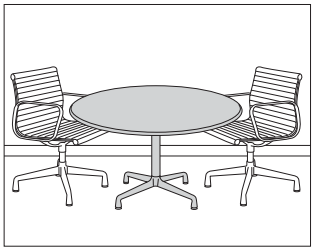

Product Information

Description

This table has a ¾"-thick stone top. Each table has adjustable glides. Ships knocked down with assembly required. Top and base components ship in separate packages.

Notes

Stone top has a honed finish and full bullnose edge profile.

Natural characteristics in stone cause variations in hues, veins, crystals, and distinctive marks. These variations and subtle changes seen as the stone ages are values associated with natural materials. No two tabletops are identically the same; variations in both color and veining are to be expected. Over time the stone may fade in color, staining of the surface may appear, and surface cracks-if not already visible at time of purchase-may appear. Small cracks do not affect the structure of the tabletop.

Dimensions

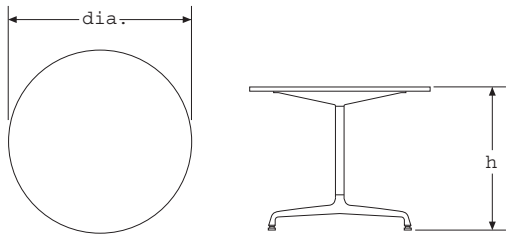

Specification Information

Step 1.

ET A

Step 2. Height

8 16" high A
6 28½" high A

Step 3. Diameter

01 30" diameter A
02 36" diameter A

Step 4. Surface Material

S stone top A

Prices for Steps 1-4.

ET801	**S**	$3926
ET802	**S**	$4736
ET601	**S**	$3926
ET602	**S**	$4736

Step 5. Top/Edge Finish

Top/Edge Finish: Stone

		01	**02**
5U	georgia grey marble A	+$436	526
HR	wisconsin black marble A	+$1212	1462
DP	georgia white marble A	+$1460	1761
FX	quebec graphite granite A	+$1460	1761

Eames® Round Table, Universal Base *continued*

Step 6. Column Finish		
91	white A	+$0
BK	black A	+$0
BU	black umber A	+$0
CL	cool grey neutral A	+$0
G2	graphite satin A	+$0
HF	inner tone light A	+$0
LT	light tone A	+$0
LU	soft white A	+$0
MT	medium tone A	+$0
SG	slate grey A	+$0
WN	warm grey neutral A	+$0
CN	metallic champagne A	+$10
EH	metallic bronze A	+$10
MS	metallic silver A	+$10

Step 7. Base Finish		
91	white A	+$0
BK	black A	+$0
BU	black umber A	+$0
CL	cool grey neutral A	+$0
G2	graphite satin A	+$0
HF	inner tone light A	+$0
LT	light tone A	+$0
LU	soft white A	+$0
MT	medium tone A	+$0
PA	polished aluminum A	+$0
SG	slate grey A	+$0
WN	warm grey neutral A	+$0
CN	metallic champagne A	+$10
EH	metallic bronze A	+$10
MS	metallic silver A	+$10

Eames® Table Universal Base Square

ET104
ET105

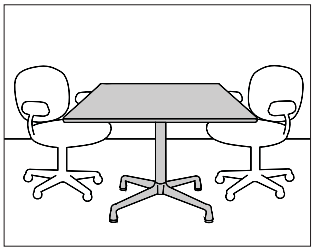

Product Information

Description

This 28½"-high table has a laminate or veneer top and thermoplastic edge. The laminate top is ⅞" thick; the veneer top is ¾" thick. Each table has adjustable glides. Shipped knocked down.

Dimensions

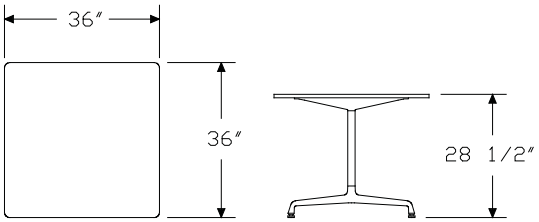

Specification Information

Step 1.

ET1

Step 2. Depth/Width

04	30″ deep x 30″ wide
05	36″ deep x 36″ wide

Step 3. Surface Material

L	laminate top
C	veneer top [A]

Prices for Steps 1-3.

ET104	**L**	$640
	C	$747
ET105	**L**	$640
	C	$747

Step 4. Top Finish

Solid-Color Laminate

For laminate top (L)

8Q	folkstone grey	+$0
91	white	+$0
98	studio white	+$0
CL	cool grey neutral	+$0
HF	inner tone light	+$0
HT	inner tone	+$0
LT	light tone	+$0
LU	soft white	+$0
WL	sandstone	+$0
WN	warm grey neutral	+$0

Fiber Laminate

For laminate top (L)

1X	vanilla	+$0
2X	wheat	+$0
3X	celery	+$0
4X	coriander	+$0
5X	chamomile	+$0
6X	cinnamon	+$0
7X	cardamom	+$0
8X	kale	+$0

Eames® Table Universal Base Square *continued*

Frosted Laminate		
For laminate top (L)		
J4	frosted light grey	+$0
J5	frosted inner tone light	+$0
J6	frosted slate grey	+$0
J7	frosted medium tone	+$0
J8	frosted black	+$0

Recut Veneer		
For veneer top (C)		
RA	light ash A	+$0
RK	mahogany dark A	+$0
RM	mahogany A	+$0

Wood Veneer		
For veneer top (C)		
V2	beech A	+$80
V3	cherry A	+$80
Z3	warm red cherry A	+$80
Z5	maple A	+$80
A2	white ash A	+$105
2U	light brown walnut A	+$105
ED	aged cherry A	+$105
40	dark brown walnut A	+$105
EG	medium brown walnut A	+$105
EK	medium red walnut A	+$105
EY	light anigre A	+$105
UL	natural maple A	+$105
UQ	light cherry A	+$105
UV	red cherry A	+$105
UX	walnut on cherry A	+$105
9N	santos palisander A	+$380

Step 5. Edge Finish		
8Q	folkstone grey	+$0
91	white	+$0
98	studio white	+$0
BK	black	+$0
BU	black umber	+$0
CL	cool grey neutral	+$0
CM	cinnamon	+$0
CO	chamomile	+$0
HF	inner tone light	+$0
LT	light tone	+$0
LU	soft white	+$0
MT	medium tone	+$0
SG	slate grey	+$0
WA	wheat	+$0
WL	sandstone	+$0
WN	warm grey neutral	+$0

Step 6. Column Finish		
91	white	+$0
BK	black	+$0
BU	black umber	+$0
CL	cool grey neutral	+$0
G2	graphite satin	+$0
HF	inner tone light	+$0
LT	light tone	+$0
LU	soft white	+$0
MT	medium tone	+$0
SG	slate grey	+$0
WN	warm grey neutral	+$0
CN	metallic champagne	+$10
EH	metallic bronze	+$10
MS	metallic silver	+$10

Eames® Table Universal Base Square *continued*

Step 7. Base Finish		
91	white	+$0
BK	black	+$0
BU	black umber	+$0
CL	cool grey neutral	+$0
G2	graphite satin	+$0
HF	inner tone light	+$0
LT	light tone	+$0
LU	soft white	+$0
MT	medium tone	+$0
PA	polished aluminum	+$0
SG	slate grey	+$0
WN	warm grey neutral	+$0
CN	metallic champagne	+$10
EH	metallic bronze	+$10
MS	metallic silver	+$10

Eames® Square Table, Universal Base ET604

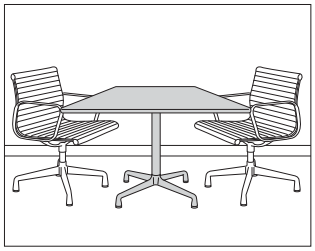

Product Information

Description

This 28½"-high table has a ¾"-thick stone top. Each table has adjustable glides. Ships knocked down with assembly required. Top and base components ship in separate packages.

Notes

Stone top has a honed finish and full bullnose edge profile.

Natural characteristics in stone cause variations in hues, veins, crystals, and distinctive marks. These variations and subtle changes seen as the stone ages are values associated with natural materials. No two tabletops are identically the same; variations in both color and veining are to be expected. Over time the stone may fade in color, staining of the surface may appear, and surface cracks-if not already visible at time of purchase-may appear. Small cracks do not affect the structure of the tabletop.

Dimensions

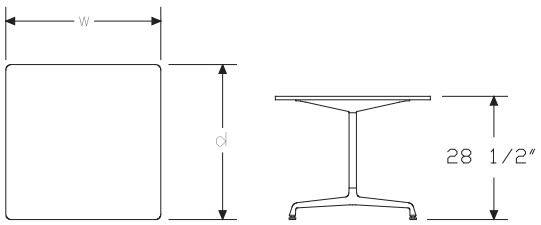

Specification Information

Step 1.

ET6 A

Step 2. Depth/Width

04	30" deep x 30" wide A	

Step 3. Surface Material

S	stone top A	

Prices for Steps 1-3.

ET604 S		$3926

Step 4. Top/Edge Finish

Stone

5U	georgia grey marble A	+$436
HR	wisconsin black marble A	+$1212
DP	georgia white marble A	+$1460
FX	quebec graphite granite A	+$1460

Step 5. Column Finish

91	white A	+$0
BK	black A	+$0
BU	black umber A	+$0
CL	cool grey neutral A	+$0
G2	graphite satin A	+$0
HF	inner tone light A	+$0
LT	light tone A	+$0
LU	soft white A	+$0
MT	medium tone A	+$0
SG	slate grey A	+$0
WN	warm grey neutral A	+$0
CN	metallic champagne A	+$10
EH	metallic bronze A	+$10
MS	metallic silver A	+$10

Eames® Square Table, Universal Base *continued*

Step 6. Base Finish		
91	white A	+$0
BK	black A	+$0
BU	black umber A	+$0
CL	cool grey neutral A	+$0
G2	graphite satin A	+$0
HF	inner tone light A	+$0
LT	light tone A	+$0
LU	soft white A	+$0
MT	medium tone A	+$0
PA	polished aluminum A	+$0
SG	slate grey A	+$0
WN	warm grey neutral A	+$0
CN	metallic champagne A	+$10
EH	metallic bronze A	+$10
MS	metallic silver A	+$10

Eames® Table Contract Base Round

ET107
ET108
ET307
ET308

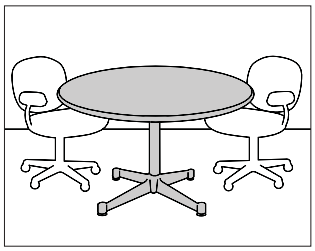

Product Information

Description

This table has a laminate or veneer top and thermoplastic edge. The laminate top is 7/8″ thick; the veneer top is 3/4″ thick. Each table has adjustable glides. Shipped knocked down.

Dimensions

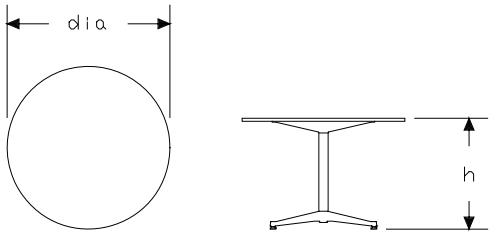

Specification Information

Step 1.

ET

Step 2. Height

3	16″ high
1	28 1/2″ high

Step 3. Diameter

07	30″ diameter
08	36″ diameter

Step 4. Surface Material

L	laminate top
C	veneer top A

Prices for Steps 1-4.

ET307	**L**	$569
	C	$658
ET308	**L**	$623
	C	$712
ET107	**L**	$569
	C	$658
ET108	**L**	$623
	C	$712

Step 5. Top Finish

Solid-Color Laminate

For laminate top (L)

8Q	folkstone grey	+$0
91	white	+$0
98	studio white	+$0
CL	cool grey neutral	+$0
HF	inner tone light	+$0
HT	inner tone	+$0
LT	light tone	+$0
LU	soft white	+$0
WL	sandstone	+$0
WN	warm grey neutral	+$0

Eames® Table Contract Base Round *continued*

Fiber Laminate		
For laminate top (L)		
1X	vanilla	+$0
2X	wheat	+$0
3X	celery	+$0
4X	coriander	+$0
5X	chamomile	+$0
6X	cinnamon	+$0
7X	cardamom	+$0
8X	kale	+$0

Frosted Laminate		
For laminate top (L)		
J4	frosted light grey	+$0
J5	frosted inner tone light	+$0
J6	frosted slate grey	+$0
J7	frosted medium tone	+$0
J8	frosted black	+$0

Recut Veneer		
For veneer top (C)		
RA	light ash A	+$0
RK	mahogany dark A	+$0
RM	mahogany A	+$0

Wood Veneer		
For veneer top (C)		
V2	beech A	+$80
V3	cherry A	+$80
Z3	warm red cherry A	+$80
Z5	maple A	+$80
A2	white ash A	+$105
ED	aged cherry A	+$105
EG	medium brown walnut A	+$105
EK	medium red walnut A	+$105
EY	light anigre A	+$105
UL	natural maple A	+$105
UQ	light cherry A	+$105
UV	red cherry A	+$105
UX	walnut on cherry A	+$105
9N	santos palisander A	+$380

Step 6. Edge Finish		
8Q	folkstone grey	+$0
91	white	+$0
98	studio white	+$0
BK	black	+$0
BU	black umber	+$0
CL	cool grey neutral	+$0
CM	cinnamon	+$0
CO	chamomile	+$0
HF	inner tone light	+$0
LT	light tone	+$0
LU	soft white	+$0
MT	medium tone	+$0
SG	slate grey	+$0
WA	wheat	+$0
WL	sandstone	+$0
WN	warm grey neutral	+$0

Step 7. Column Finish		
91	white	+$0
BK	black	+$0
BU	black umber	+$0
CL	cool grey neutral	+$0
G2	graphite satin	+$0
HF	inner tone light	+$0
LT	light tone	+$0
LU	soft white	+$0
MT	medium tone	+$0
SG	slate grey	+$0
WN	warm grey neutral	+$0
CN	metallic champagne	+$10
EH	metallic bronze	+$10
MS	metallic silver	+$10

Eames® Table Contract Base Round *continued*

Step 8. Base Finish		
91	white	+$0
BK	black	+$0
BU	black umber	+$0
CL	cool grey neutral	+$0
G2	graphite satin	+$0
HF	inner tone light	+$0
LT	light tone	+$0
LU	soft white	+$0
MT	medium tone	+$0
PA	polished aluminum	+$0
SG	slate grey	+$0
WN	warm grey neutral	+$0
CN	metallic champagne	+$10
EH	metallic bronze	+$10
MS	metallic silver	+$10

Eames® Round Table, Contract Base

ET607
ET608
ET609
ET610
ET807
ET808
ET809
ET810

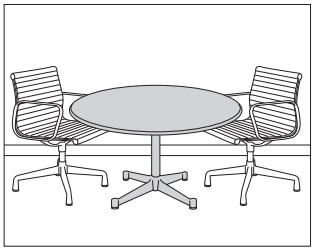

Product Information

Description

This table has a ¾"-thick stone top. Each table has adjustable glides. Ships knocked down with assembly required. Top and base components ship in separate packages.

Notes

Stone top has a honed finish and full bullnose edge profile.

Natural characteristics in stone cause variations in hues, veins, crystals, and distinctive marks. These variations and subtle changes seen as the stone ages are values associated with natural materials. No two tabletops are identically the same; variations in both color and veining are to be expected. Over time the stone may fade in color, staining of the surface may appear, and surface cracks-if not already visible at time of purchase-may appear. Small cracks do not affect the structure of the tabletop.

Dimensions

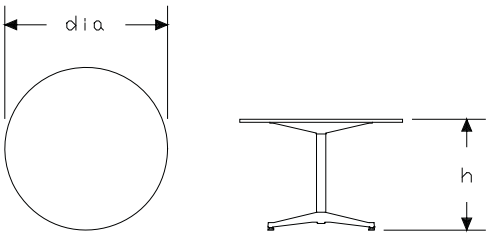

Specification Information

Step 1.

ET A

Step 2. Height

8	16" high A
6	28½" high A

Step 3. Diameter

07	30" diameter A
08	36" diameter A
09	42" diameter A
10	48" diameter A

Step 4. Surface Material

S	stone top A

Prices for Steps 1-4.

ET807	**S**	$3926
ET808	**S**	$4736
ET809	**S**	$7741
ET810	**S**	$7999
ET607	**S**	$3926
ET608	**S**	$4736
ET609	**S**	$7741
ET610	**S**	$7999

Step 5. Top/Edge Finish

Stone

		07	08	09	10
5U	georgia grey marble A	+$436	526	610	711
HR	wisconsin black marble A	+$1212	1462	1590	1723
DP	georgia white marble A	+$1460	1761	2392	2836
FX	quebec graphite granite A	+$1460	1761	2392	2836

Eames® Round Table, Contract Base *continued*

Step 6. Column Finish		
91	white A	+$0
BK	black A	+$0
BU	black umber A	+$0
CL	cool grey neutral A	+$0
G2	graphite satin A	+$0
HF	inner tone light A	+$0
LT	light tone A	+$0
LU	soft white A	+$0
MT	medium tone A	+$0
SG	slate grey A	+$0
WN	warm grey neutral A	+$0
CN	metallic champagne A	+$10
EH	metallic bronze A	+$10
MS	metallic silver A	+$10

Step 7. Base Finish		
91	white A	+$0
BK	black A	+$0
BU	black umber A	+$0
CL	cool grey neutral A	+$0
G2	graphite satin A	+$0
HF	inner tone light A	+$0
LT	light tone A	+$0
LU	soft white A	+$0
MT	medium tone A	+$0
PA	polished aluminum A	+$0
SG	slate grey A	+$0
WN	warm grey neutral A	+$0
CN	metallic champagne A	+$10
EH	metallic bronze A	+$10
MS	metallic silver A	+$10

Eames® Table Contract Base Square

ET112
ET113

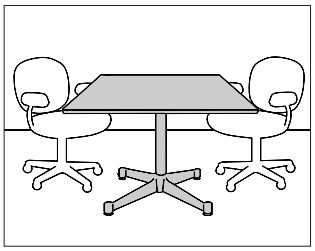

Product Information

Description

This 28½"-high table has a laminate or veneer top and thermoplastic edge. The laminate top is ⅞" thick; the veneer top is ¾" thick. Each table has adjustable glides. Shipped knocked down.

Dimensions

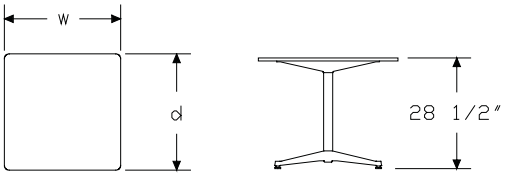

Specification Information

Step 1.

ET11

Step 2. Width

2	30" wide
3	36" wide

Step 3. Surface Material

L	laminate top
C	veneer top A

Prices for Steps 1-3.

ET112	**L**	$569
	C	$658
ET113	**L**	$623
	C	$712

Step 4. Top Finish

Solid-Color Laminate

For laminate top (L)

8Q	folkstone grey	+$0
91	white	+$0
98	studio white	+$0
CL	cool grey neutral	+$0
HF	inner tone light	+$0
HT	inner tone	+$0
LT	light tone	+$0
LU	soft white	+$0
WL	sandstone	+$0
WN	warm grey neutral	+$0

Fiber Laminate

For laminate top (L)

1X	vanilla	+$0
2X	wheat	+$0
3X	celery	+$0
4X	coriander	+$0
5X	chamomile	+$0
6X	cinnamon	+$0
7X	cardamom	+$0
8X	kale	+$0

Eames® Table Contract Base Square *continued*

Frosted Laminate		
For laminate top (L)		
J4	frosted light grey	+$0
J5	frosted inner tone light	+$0
J6	frosted slate grey	+$0
J7	frosted medium tone	+$0
J8	frosted black	+$0

Recut Veneer		
For veneer top (C)		
RA	light ash A	+$0
RK	mahogany dark A	+$0
RM	mahogany A	+$0

Wood Veneer		
For veneer top (C)		
V2	beech A	+$80
V3	cherry A	+$80
Z3	warm red cherry A	+$80
Z5	maple A	+$80
A2	white ash A	+$105
2U	light brown walnut A	+$105
ED	aged cherry A	+$105
40	dark brown walnut A	+$105
EG	medium brown walnut A	+$105
EK	medium red walnut A	+$105
EY	light anigre A	+$105
UL	natural maple A	+$105
UQ	light cherry A	+$105
UV	red cherry A	+$105
UX	walnut on cherry A	+$105
9N	santos palisander A	+$380

Step 5. Edge Finish		
8Q	folkstone grey	+$0
91	white	+$0
98	studio white	+$0
BK	black	+$0
BU	black umber	+$0
CL	cool grey neutral	+$0
CM	cinnamon	+$0
CO	chamomile	+$0
HF	inner tone light	+$0
LT	light tone	+$0
LU	soft white	+$0
MT	medium tone	+$0
SG	slate grey	+$0
WA	wheat	+$0
WL	sandstone	+$0
WN	warm grey neutral	+$0

Step 6. Column Finish		
91	white	+$0
BK	black	+$0
BU	black umber	+$0
CL	cool grey neutral	+$0
G2	graphite satin	+$0
HF	inner tone light	+$0
LT	light tone	+$0
LU	soft white	+$0
MT	medium tone	+$0
SG	slate grey	+$0
WN	warm grey neutral	+$0
CN	metallic champagne	+$10
EH	metallic bronze	+$10
MS	metallic silver	+$10

Eames® Table Contract Base Square *continued*

Step 7. Base Finish		
91	white	+$0
BK	black	+$0
BU	black umber	+$0
CL	cool grey neutral	+$0
G2	graphite satin	+$0
HF	inner tone light	+$0
LT	light tone	+$0
LU	soft white	+$0
MT	medium tone	+$0
PA	polished aluminum	+$0
SG	slate grey	+$0
WN	warm grey neutral	+$0
CN	metallic champagne	+$10
EH	metallic bronze	+$10
MS	metallic silver	+$10

Eames® Square Table, Contract Base

ET612
ET614

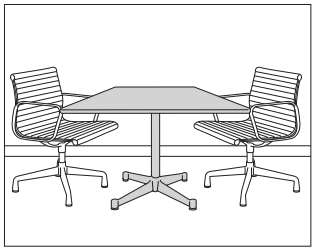

Product Information

Description

This 28½"-high table has a ¾"-thick stone top. Each table has adjustable glides. Ships knocked down with assembly required. Top and base components ship in separate packages.

Notes

Stone top has a honed finish and full bullnose edge profile.

Natural characteristics in stone cause variations in hues, veins, crystals, and distinctive marks. These variations and subtle changes seen as the stone ages are values associated with natural materials. No two tabletops are identically the same; variations in both color and veining are to be expected. Over time the stone may fade in color, staining of the surface may appear, and surface cracks-if not already visible at time of purchase-may appear. Small cracks do not affect the structure of the tabletop.

Dimensions

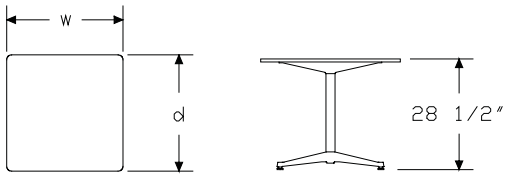

Specification Information

Step 1.

ET61 A

Step 2. Width

2	30" wide	A
4	42" wide	A

Step 3. Surface Material

S	stone top	A

Prices for Steps 1-3.

ET612	**S**	$3926
ET614	**S**	$7741

Step 4. Top Finish

Top/Edge Finish:

			2	**4**
5U	georgia grey marble	A	+$436	610
HR	wisconsin black marble	A	+$1212	1590
DP	georgia white marble	A	+$1460	2392
FX	quebec graphite granite	A	+$1460	2392

Step 5. Column Finish

91	white	A	+$0
BK	black	A	+$0
BU	black umber	A	+$0
CL	cool grey neutral	A	+$0
G2	graphite satin	A	+$0
HF	inner tone light	A	+$0
LT	light tone	A	+$0
LU	soft white	A	+$0
MT	medium tone	A	+$0
SG	slate grey	A	+$0
WN	warm grey neutral	A	+$0
CN	metallic champagne	A	+$10
EH	metallic bronze	A	+$10
MS	metallic silver	A	+$10

Eames® Square Table, Contract Base *continued*

Step 6. Base Finish		
91	white A	+$0
BK	black A	+$0
BU	black umber A	+$0
CL	cool grey neutral A	+$0
G2	graphite satin A	+$0
HF	inner tone light A	+$0
LT	light tone A	+$0
LU	soft white A	+$0
MT	medium tone A	+$0
PA	polished aluminum A	+$0
SG	slate grey A	+$0
WN	warm grey neutral A	+$0
CN	metallic champagne A	+$10
EH	metallic bronze A	+$10
MS	metallic silver A	+$10

Eames® Table Segmented Base Round

ET122
ET123
ET124
ET127
ET129
ET131

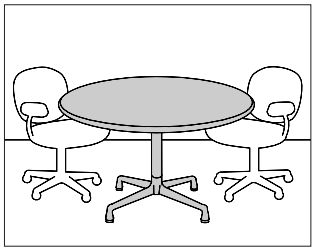

Product Information

Description

This 28½"-high table has a laminate or veneer top and thermoplastic edge or a veneer top and edge. 42" and 48" thermoplastic-edge tables have a ⅞"-thick laminate or ¾"-thick veneer top; 54" to 96" thermoplastic-edge tables have a 1⅛"-thick laminate or veneer top. 48" veneer-edge tables have a ¾"-thick veneer top; 54" veneer-edge tables have a 1⅛"-thick veneer top. Each table has adjustable glides. 72" to 96" tabletops are shipped in 2 equal pieces. Shipped knocked down.

Dimensions

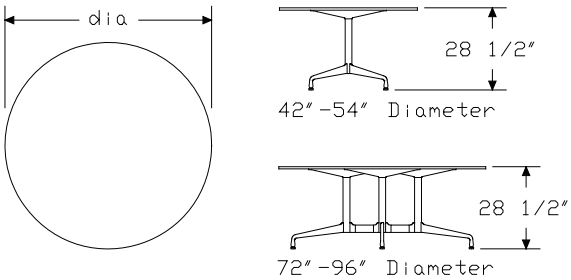

Specification Information

Step 1.

ET1

Step 2. Diameter

22	42" diameter
23	48" diameter
24	54" diameter
27	72" diameter
29	84" diameter
31	96" diameter

Step 3. Surface Material

For 42" diameter (22), 72" diameter (27), 84" diameter (29), or 96" diameter (31)

L	laminate top with thermoplastic edge
C	veneer top with thermoplastic edge A

For 48" diameter (23) or 54" diameter (24)

L	laminate top with thermoplastic edge
C	veneer top with thermoplastic edge A
W	veneer top with veneer edge A

Prices for Steps 1-3.

ET122	**L**	$1005
	C	$1189
ET123	**L**	$1104
	C	$1292
	W	$1340
ET124	**L**	$1553
	C	$1762
	W	$1831
ET127	**L**	$3220
	C	$3646
ET129	**L**	$3636
	C	$4231
ET131	**L**	$4416
	C	$5201

Eames® Table Segmented Base Round *continued*

Step 4.

Top Finish: Solid-Color Laminate

For laminate top with thermoplastic edge (L)

8Q	folkstone grey	+$0
91	white	+$0
98	studio white	+$0
CL	cool grey neutral	+$0
HF	inner tone light	+$0
HT	inner tone	+$0
LT	light tone	+$0
LU	soft white	+$0
WL	sandstone	+$0
WN	warm grey neutral	+$0

Top Finish: Fiber Laminate

For laminate top with thermoplastic edge (L)

1X	vanilla	+$0
2X	wheat	+$0
3X	celery	+$0
4X	coriander	+$0
5X	chamomile	+$0
6X	cinnamon	+$0
7X	cardamom	+$0
8X	kale	+$0

Top Finish: Frosted Laminate

For laminate top with thermoplastic edge (L)

J4	frosted light grey	+$0
J5	frosted inner tone light	+$0
J6	frosted slate grey	+$0
J7	frosted medium tone	+$0
J8	frosted black	+$0

Top Finish: Recut Veneer

For veneer top with thermoplastic edge (C)

		22	23	24	27	29
RA	light ash A	+$0	0	0	0	0
RK	mahogany dark A	+$0	0	0	0	0
RM	mahogany A	+$0	0	0	0	0

		31
RA	light ash A	+$0
RK	mahogany dark A	+$0
RM	mahogany A	+$0

Top Finish: Wood Veneer

For veneer top with thermoplastic edge (C)

		22	23	24	27	29
V2	beech A	+$95	130	170	250	290
V3	cherry A	+$95	130	170	250	290
Z3	warm red cherry A	+$95	130	170	250	290
Z5	maple A	+$95	130	170	250	290
A2	white ash A	+$130	175	230	365	425
2U	light brown walnut A	+$130	175	230	365	425
ED	aged cherry A	+$130	175	230	365	425
40	dark brown walnut A	+$130	175	230	365	425
EG	medium brown walnut A	+$130	175	230	365	425
EK	medium red walnut A	+$130	175	230	365	425
EY	light anigre A	+$130	175	230	365	425
UL	natural maple A	+$130	175	230	365	425
UQ	light cherry A	+$130	175	230	365	425
UV	red cherry A	+$130	175	230	365	425
UX	walnut on cherry A	+$130	175	230	365	425
9N	santos palisander A	+$720	839	976	2044	2380

		31
V2	beech A	+$330
V3	cherry A	+$330
Z3	warm red cherry A	+$330
Z5	maple A	+$330
A2	white ash A	+$495
2U	light brown walnut A	+$495
ED	aged cherry A	+$495
40	dark brown walnut A	+$495
EG	medium brown walnut A	+$495
EK	medium red walnut A	+$495
EY	light anigre A	+$495
UL	natural maple A	+$495
UQ	light cherry A	+$495
UV	red cherry A	+$495
UX	walnut on cherry A	+$495
9N	santos palisander A	+$2782

Top/Edge Finish: Recut Veneer

For 48" diameter (23) with veneer top with veneer edge (W)

RA	light ash A	+$0
RK	mahogany dark A	+$0
RM	mahogany A	+$0

Eames® Table Segmented Base Round *continued*

Top/Edge Finish: Wood Veneer

For 48" diameter (23) with veneer top with veneer edge (W)

V2	beech A	+$130
V3	cherry A	+$130
Z3	warm red cherry A	+$130
Z5	maple A	+$130
A2	white ash A	+$175
2U	light brown walnut A	+$175
ED	aged cherry A	+$175
40	dark brown walnut A	+$175
EG	medium brown walnut A	+$175
EK	medium red walnut A	+$175
EY	light anigre A	+$175
UL	natural maple A	+$175
UQ	light cherry A	+$175
UV	red cherry A	+$175
UX	walnut on cherry A	+$175
9N	santos palisander A	+$839

Top/Edge Finish: Recut Veneer

For 54" diameter (24) with veneer top with veneer edge (W)

RA	light ash A	+$0
RK	mahogany dark A	+$0
RM	mahogany A	+$0

Top/Edge Finish: Wood Veneer

For 54" diameter (24) with veneer top with veneer edge (W)

V2	beech A	+$170
V3	cherry A	+$170
Z3	warm red cherry A	+$170
Z5	maple A	+$170
A2	white ash A	+$230
ED	aged cherry A	+$230
2U	light brown walnut A	+$230
EG	medium brown walnut A	+$230
40	dark brown walnut A	+$230
EK	medium red walnut A	+$230
EY	light anigre A	+$230
UL	natural maple A	+$230
UQ	light cherry A	+$230
UV	red cherry A	+$230
UX	walnut on cherry A	+$230
9N	santos palisander A	+$976

Step 5. Edge Finish

For laminate top with thermoplastic edge (L) or veneer top with thermoplastic edge (C)

8Q	folkstone grey	+$0
91	white	+$0
98	studio white	+$0
BU	black umber	+$0
CL	cool grey neutral	+$0
CM	cinnamon	+$0
CO	chamomile	+$0
HF	inner tone light	+$0
LT	light tone	+$0
LU	soft white	+$0
MT	medium tone	+$0
SG	slate grey	+$0
WA	wheat	+$0
WL	sandstone	+$0
WN	warm grey neutral	+$0

Step 6. Column Finish

91	white	+$0
BK	black	+$0
BU	black umber	+$0
CL	cool grey neutral	+$0
G2	graphite satin	+$0
HF	inner tone light	+$0
LT	light tone	+$0
LU	soft white	+$0
MT	medium tone	+$0
SG	slate grey	+$0
WN	warm grey neutral	+$0
CN	metallic champagne	+$10
EH	metallic bronze	+$10
MS	metallic silver	+$10

Eames® Table Segmented Base Round *continued*

Step 7. Base Finish		
91	white	+$0
BK	black	+$0
BU	black umber	+$0
CL	cool grey neutral	+$0
G2	graphite satin	+$0
HF	inner tone light	+$0
LT	light tone	+$0
LU	soft white	+$0
MT	medium tone	+$0
PA	polished aluminum	+$0
SG	slate grey	+$0
WN	warm grey neutral	+$0
CN	metallic champagne	+$10
EH	metallic bronze	+$10
MS	metallic silver	+$10

Eames® Table Segmented Base Oval

ET149
ET150
ET151
ET152
ET153
ET155
ET156
ET157
ET158
ET160
ET161
ET162
ET164
ET166
ET168
ET170

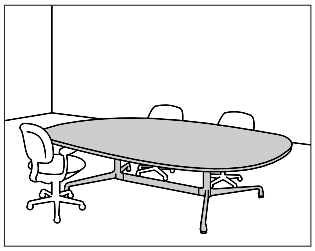

Product Information

Description

This 28½"-high table has a laminate or veneer top and thermoplastic edge or a veneer top and edge. The thermoplastic-edge table has a 1⅛"-thick laminate or veneer top. The veneer-edge table has a 1⅛"-thick veneer top. Each table has adjustable glides.

Notes

For veneer tables, 108"- to 192"-wide tabletops are shipped in 2 equal pieces; 216"- and 264"-wide tabletops are shipped in 3 equal pieces.

For laminate tables, 120"- to 216"-wide tabletops are shipped in 2 equal pieces; 240"- and 264"-wide tabletops are shipped in 3 equal pieces.

Dimensions

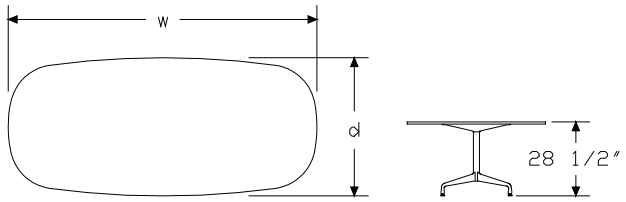

Specification Information

Step 1.

ET1

Step 2. Depth/Width

49	36" deep x 60" wide
50	42" deep x 66" wide
51	42" deep x 72" wide
52	42" deep x 78" wide
53	42" deep x 84" wide
55	54" deep x 90" wide
56	54" deep x 96" wide
57	54" deep x 108" wide
58	54" deep x 120" wide
60	54" deep x 144" wide
61	54" deep x 156" wide
62	54" deep x 168" wide
64	54" deep x 192" wide
66	54" deep x 216" wide
68	54" deep x 240" wide
70	54" deep x 264" wide

Step 3. Surface Material

For 36" deep x 60" wide (49), 42" deep x 72" wide (51), or 42" deep x 84" wide (53)

L	laminate top with thermoplastic edge
C	veneer top with thermoplastic edge A
W	veneer top with veneer edge A

For 42" deep x 66" wide (50), 42" deep x 78" wide (52), 54" deep x 90" wide (55), 54" deep x 96" wide (56), 54" deep x 108" wide (57), 54" deep x 120" wide (58), 54" deep x 144" wide (60), 54" deep x 156" wide (61), 54" deep x 168" wide (62), 54" deep x 192" wide (64), 54" deep x 216" wide (66), 54" deep x 240" wide (68), or 54" deep x 264" wide (70)

L	laminate top with thermoplastic edge
C	veneer top with thermoplastic edge A

Prices for Steps 1-3.

ET149	**L**	$1981
	C	$2213
	W	$2322
ET150	**L**	$2119
	C	$2357

Eames® Table Segmented Base
Oval *continued*

ET151	**L**	$2183
	C	$2493
	W	$2663
ET152	**L**	$2230
	C	$2609
ET153	**L**	$2256
	C	$2636
	W	$2785
ET155	**L**	$3076
	C	$3495
ET156	**L**	$3115
	C	$3536
ET157	**L**	$4053
	C	$4518
ET158	**L**	$4508
	C	$5065
ET160	**L**	$4885
	C	$5458
ET161	**L**	$5308
	C	$5903
ET162	**L**	$5817
	C	$6504
ET164	**L**	$6422
	C	$7273
ET166	**L**	$7074
	C	$7955
ET168	**L**	$7803
	C	$8720
ET170	**L**	$8513
	C	$9600

Step 4.

Top Finish: Solid-Color Laminate

For laminate top with thermoplastic edge (L)

8Q	folkstone grey	+$0
91	white	+$0
98	studio white	+$0
CL	cool grey neutral	+$0
HF	inner tone light	+$0
HT	inner tone	+$0
LT	light tone	+$0
LU	soft white	+$0
WL	sandstone	+$0
WN	warm grey neutral	+$0

Top Finish: Fiber Laminate

For laminate top with thermoplastic edge (L)

1X	vanilla	+$0
2X	wheat	+$0
3X	celery	+$0
4X	coriander	+$0
5X	chamomile	+$0
6X	cinnamon	+$0
7X	cardamom	+$0
8X	kale	+$0

Top Finish: Frosted Laminate

For laminate top with thermoplastic edge (L)

J4	frosted light grey	+$0
J5	frosted inner tone light	+$0
J6	frosted slate grey	+$0
J7	frosted medium tone	+$0
J8	frosted black	+$0

Top Finish: Recut Veneer

For veneer top with thermoplastic edge (C)

		49	**50**	**51**	**52**	**53**
RA	light ash A	+$0	0	0	0	0
RK	mahogany dark A	+$0	0	0	0	0
RM	mahogany A	+$0	0	0	0	0
		55	**56**	**57**	**58**	**60**
RA	light ash A	+$0	0	0	0	0
RK	mahogany dark A	+$0	0	0	0	0
RM	mahogany A	+$0	0	0	0	0

Eames® Table Segmented Base
Oval *continued*

		61	62	64	66	68
RA	light ash A	+$0	0	0	0	0
RK	mahogany dark A	+$0	0	0	0	0
RM	mahogany A	+$0	0	0	0	0

		70
RA	light ash A	+$0
RK	mahogany dark A	+$0
RM	mahogany A	+$0

Top Finish: Wood Veneer

For veneer top with thermoplastic edge (C)

		49	50	51	52	53
V2	beech A	+$205	215	225	245	265
V3	cherry A	+$205	215	225	245	265
Z3	warm red cherry A	+$205	215	225	245	265
Z5	maple A	+$205	215	225	245	265
A2	white ash A	+$275	290	305	330	355
2U	light brown walnut A	+$275	290	305	330	355
ED	aged cherry A	+$275	290	305	330	355
40	dark brown walnut A	+$275	290	305	330	355
EG	medium brown walnut A	+$275	290	305	330	355
EK	medium red walnut A	+$275	290	305	330	355
EY	light anigre A	+$275	290	305	330	355
UL	natural maple A	+$275	290	305	330	355
UQ	light cherry A	+$275	290	305	330	355
UV	red cherry A	+$275	290	305	330	355
UX	walnut on cherry A	+$275	290	305	330	355
9N	santos palisander A	+$1009	1160	1220	1320	1420

		55	56	57	58	60
V2	beech A	+$290	315	345	375	410
V3	cherry A	+$290	315	345	375	410
Z3	warm red cherry A	+$290	315	345	375	410
Z5	maple A	+$290	315	345	375	410
A2	white ash A	+$425	440	500	540	585
2U	light brown walnut A	+$425	440	500	540	585
ED	aged cherry A	+$425	440	500	540	585
40	dark brown walnut A	+$425	440	500	540	585
EG	medium brown walnut A	+$425	440	500	540	585
EK	medium red walnut A	+$425	440	500	540	585
EY	light anigre A	+$425	440	500	540	585
UL	natural maple A	+$425	440	500	540	585
UQ	light cherry A	+$425	440	500	540	585
UV	red cherry A	+$425	440	500	540	585
UX	walnut on cherry A	+$425	440	500	540	585
9N	santos palisander A	+$1700	1760	2350	2538	2750

		61	62	64	66	68
V2	beech A	+$445	480	520	560	600
V3	cherry A	+$445	480	520	560	600
Z3	warm red cherry A	+$445	480	520	560	600
Z5	maple A	+$445	480	520	560	600
A2	white ash A	+$635	690	755	815	880
2U	light brown walnut A	+$635	690	755	815	880
ED	aged cherry A	+$635	690	755	815	880
40	dark brown walnut A	+$635	690	755	815	880
EG	medium brown walnut A	+$635	690	755	815	880
EK	medium red walnut A	+$635	690	755	815	880
EY	light anigre A	+$635	690	755	815	880
UL	natural maple A	+$635	690	755	815	880
UQ	light cherry A	+$635	690	755	815	880
UV	red cherry A	+$635	690	755	815	880
UX	walnut on cherry A	+$635	690	755	815	880
9N	santos palisander A	+$3175	3450	3775	4075	4400

Eames® Table Segmented Base
Oval *continued*

		70
V2	beech A	+$650
V3	cherry A	+$650
Z3	warm red cherry A	+$650
Z5	maple A	+$650
A2	white ash A	+$950
2U	light brown walnut A	+$950
ED	aged cherry A	+$950
40	dark brown walnut A	+$950
EG	medium brown walnut A	+$950
EK	medium red walnut A	+$950
EY	light anigre A	+$950
UL	natural maple A	+$950
UQ	light cherry A	+$950
UV	red cherry A	+$950
UX	walnut on cherry A	+$950
9N	santos palisander A	+$5320

Top/Edge Finish: Recut Veneer

For 36" deep x 60" wide (49) with veneer top with veneer edge (W)

RA	light ash A	+$0
RK	mahogany dark A	+$0
RM	mahogany A	+$0

Top/Edge Finish: Wood Veneer

For 36" deep x 60" wide (49) with veneer top with veneer edge (W)

V2	beech A	+$205
V3	cherry A	+$205
Z3	warm red cherry A	+$205
Z5	maple A	+$205
A2	white ash A	+$275
2U	light brown walnut A	+$275
ED	aged cherry A	+$275
40	dark brown walnut A	+$275
EG	medium brown walnut A	+$275
EK	medium red walnut A	+$275
EY	light anigre A	+$275
UL	natural maple A	+$275
UQ	light cherry A	+$275
UV	red cherry A	+$275
UX	walnut on cherry A	+$275
9N	santos palisander A	+$1009

Top/Edge Finish: Recut Veneer

For 42" deep x 72" wide (51) with veneer top with veneer edge (W)

RA	light ash A	+$0
RK	mahogany dark A	+$0
RM	mahogany A	+$0

Top/Edge Finish: Wood Veneer

For 42" deep x 72" wide (51) with veneer top with veneer edge (W)

V2	beech A	+$225
V3	cherry A	+$225
Z3	warm red cherry A	+$225
Z5	maple A	+$225
A2	white ash A	+$305
2U	light brown walnut A	+$305
ED	aged cherry A	+$305
40	dark brown walnut A	+$305
EG	medium brown walnut A	+$305
EK	medium red walnut A	+$305
EY	light anigre A	+$305
UL	natural maple A	+$305
UQ	light cherry A	+$305
UV	red cherry A	+$305
UX	walnut on cherry A	+$305
9N	santos palisander A	+$1220

Top/Edge Finish: Recut Veneer

For 42" deep x 84" wide (53) with veneer top with veneer edge (W)

RA	light ash A	+$0
RK	mahogany dark A	+$0
RM	mahogany A	+$0

Eames® Table Segmented Base
Oval *continued*

Top/Edge Finish: Wood Veneer		
For 42" deep x 84" wide (53) with veneer top with veneer edge (W)		
V2	beech A	+$265
V3	cherry A	+$265
Z3	warm red cherry A	+$265
Z5	maple A	+$265
A2	white ash A	+$355
2U	light brown walnut A	+$355
ED	aged cherry A	+$355
40	dark brown walnut A	+$355
EG	medium brown walnut A	+$355
EK	medium red walnut A	+$355
EY	light anigre A	+$355
UL	natural maple A	+$355
UQ	light cherry A	+$355
UV	red cherry A	+$355
UX	walnut on cherry A	+$355
9N	santos palisander A	+$1420

Step 5. Edge Finish		
For laminate top with thermoplastic edge (L) or veneer top with thermoplastic edge (C)		
8Q	folkstone grey	+$0
91	white	+$0
98	studio white	+$0
BU	black umber	+$0
CL	cool grey neutral	+$0
CM	cinnamon	+$0
CO	chamomile	+$0
HF	inner tone light	+$0
LT	light tone	+$0
LU	soft white	+$0
MT	medium tone	+$0
SG	slate grey	+$0
WA	wheat	+$0
WL	sandstone	+$0
WN	warm grey neutral	+$0

Step 6. Column Finish		
91	white	+$0
BK	black	+$0
BU	black umber	+$0
CL	cool grey neutral	+$0
CN	metallic champagne	+$10
EH	metallic bronze	+$10
G2	graphite satin	+$0
HF	inner tone light	+$0
LT	light tone	+$0
LU	soft white	+$0
MS	metallic silver	+$10
MT	medium tone	+$0
SG	slate grey	+$0
WN	warm grey neutral	+$0

Step 7. Base Finish		
91	white	+$0
BK	black	+$0
BU	black umber	+$0
CL	cool grey neutral	+$0
CN	metallic champagne	+$10
EH	metallic bronze	+$10
G2	graphite satin	+$0
HF	inner tone light	+$0
LT	light tone	+$0
LU	soft white	+$0
MS	metallic silver	+$10
MT	medium tone	+$0
PA	polished aluminum	+$0
SG	slate grey	+$0
WN	warm grey neutral	+$0

Eames® Table Segmented Base Rectangular

ET142
ET143
ET144
ET145
ET147
ET187
ET188
ET189

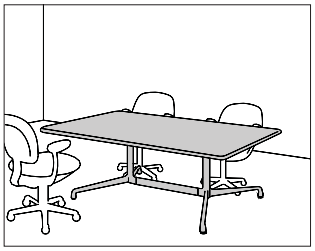

Product Information

Description

This 28½"-high table has a laminate or veneer top and thermoplastic edge or a veneer top and edge. The thermoplastic-edge table has an 11/16"-thick laminate or veneer top. The veneer-edge table has a 1⅛"-thick veneer top. Each table has adjustable glides. Shipped knocked down.

Notes

Actual dimension is ⅝" less than listed depth and width.

Dimensions

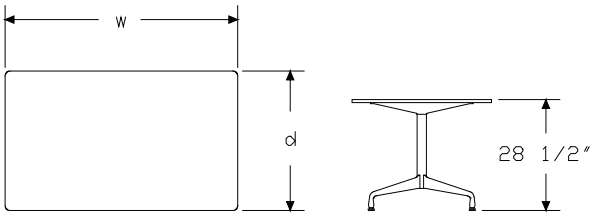

Specification Information

Step 1.

ET1

Step 2. Depth/Width

87	30" deep x 60" wide
88	30" deep x 72" wide
42	36" deep x 60" wide
43	36" deep x 72" wide
44	36" deep x 84" wide
89	36" deep x 96" wide
45	42" deep x 84" wide
47	48" deep x 96" wide

Step 3. Surface Material

For 30" deep x 60" wide (87), 30" deep x 72" wide (88), or 36" deep x 72" wide (43)

L	laminate top with thermoplastic edge
C	veneer top with thermoplastic edge A
W	veneer top with veneer edge A

For 36" deep x 60" wide (42), 36" deep x 84" wide (44), 36" deep x 96" wide (89), 42" deep x 84" wide (45), or 48" deep x 96" wide (47)

L	laminate top with thermoplastic edge
C	veneer top with thermoplastic edge A

Prices for Steps 1-3.

ET187	**L**	$1565
	C	$1777
	W	$1913
ET188	**L**	$1630
	C	$1844
	W	$2002
ET142	**L**	$1670
	C	$1885
ET143	**L**	$1696
	C	$1939
	W	$2090
ET144	**L**	$1825
	C	$2090

Eames® Table Segmented Base
Rectangular *continued*

ET189	**L**	$2033
	C	$2309
ET145	**L**	$2033
	C	$2309
ET147	**L**	$2594
	C	$2990

Step 4.

Top Finish: Solid-Color Laminate

For laminate top with thermoplastic edge (L)

8Q	folkstone grey	+$0
91	white	+$0
98	studio white	+$0
CL	cool grey neutral	+$0
HF	inner tone light	+$0
HT	inner tone	+$0
LT	light tone	+$0
LU	soft white	+$0
WL	sandstone	+$0
WN	warm grey neutral	+$0

Top Finish: Fiber Laminate

For laminate top with thermoplastic edge (L)

1X	vanilla	+$0
2X	wheat	+$0
3X	celery	+$0
4X	coriander	+$0
5X	chamomile	+$0
6X	cinnamon	+$0
7X	cardamom	+$0
8X	kale	+$0

Top Finish: Frosted Laminate

For laminate top with thermoplastic edge (L)

J4	frosted light grey	+$0
J5	frosted inner tone light	+$0
J6	frosted slate grey	+$0
J7	frosted medium tone	+$0
J8	frosted black	+$0

Top Finish: Recut Veneer

For veneer top with thermoplastic edge (C)

		87	**88**	**42**	**43**	**44**
RA	light ash [A]	+$0	0	0	0	0
RK	mahogany dark [A]	+$0	0	0	0	0
RM	mahogany [A]	+$0	0	0	0	0
				89	**45**	**47**
RA	light ash [A]			+$0	0	0
RK	mahogany dark [A]			+$0	0	0
RM	mahogany [A]			+$0	0	0

Top Finish: Wood Veneer

For veneer top with thermoplastic edge (C)

		87	**88**	**42**	**43**	**44**
V2	beech [A]	+$190	205	205	215	225
V3	cherry [A]	+$190	205	205	215	225
Z3	warm red cherry [A]	+$190	205	205	215	225
Z5	maple [A]	+$190	205	205	215	225
A2	white ash [A]	+$250	265	265	290	305
2U	light brown walnut [A]	+$250	265	265	290	305
ED	aged cherry [A]	+$250	265	265	290	305
40	dark brown walnut [A]	+$250	265	265	290	305
EG	medium brown walnut [A]	+$250	265	265	290	305
EK	medium red walnut [A]	+$250	265	265	290	305
EY	light anigre [A]	+$250	265	265	290	305
UL	natural maple [A]	+$250	265	265	290	305
UQ	light cherry [A]	+$250	265	265	290	305
UV	red cherry [A]	+$250	265	265	290	305
UX	walnut on cherry [A]	+$250	265	265	290	305
9N	santos palisander [A]	+$950	1009	1009	1104	1161

Eames® Table Segmented Base
Rectangular *continued*

		89	45	47
V2	beech A	+$245	245	280
V3	cherry A	+$245	245	280
Z3	warm red cherry A	+$245	245	280
Z5	maple A	+$245	245	280
A2	white ash A	+$330	330	385
2U	light brown walnut A	+$330	330	385
ED	aged cherry A	+$330	330	385
40	dark brown walnut A	+$330	330	385
EG	medium brown walnut A	+$330	330	385
EK	medium red walnut A	+$330	330	385
EY	light anigre A	+$330	330	385
UL	natural maple A	+$330	330	385
UQ	light cherry A	+$330	330	385
UV	red cherry A	+$330	330	385
UX	walnut on cherry A	+$330	330	385
9N	santos palisander A	+$1420	1420	1656

Top/Edge Finish: Recut Veneer

For 30" deep x 60" wide (87) with veneer top with veneer edge (W)

RA	light ash A	+$0
RK	mahogany dark A	+$0
RM	mahogany A	+$0

Top/Edge Finish: Wood Veneer

For 30" deep x 60" wide (87) with veneer top with veneer edge (W)

V2	beech A	+$190
V3	cherry A	+$190
Z3	warm red cherry A	+$190
Z5	maple A	+$190
A2	white ash A	+$250
2U	light brown walnut A	+$250
ED	aged cherry A	+$250
40	dark brown walnut A	+$250
EG	medium brown walnut A	+$250
EK	medium red walnut A	+$250
EY	light anigre A	+$250
UL	natural maple A	+$250
UQ	light cherry A	+$250
UV	red cherry A	+$250
UX	walnut on cherry A	+$250
9N	santos palisander A	+$950

Top/Edge Finish: Recut Veneer

For 30" deep x 72" wide (88) with veneer top with veneer edge (W)

RA	light ash A	+$0
RK	mahogany dark A	+$0
RM	mahogany A	+$0

Top/Edge Finish: Wood Veneer

For 30" deep x 72" wide (88) with veneer top with veneer edge (W)

V2	beech A	+$205
V3	cherry A	+$205
Z3	warm red cherry A	+$205
Z5	maple A	+$205
A2	white ash A	+$265
2U	light brown walnut A	+$265
ED	aged cherry A	+$265
40	dark brown walnut A	+$265
EG	medium brown walnut A	+$265
EK	medium red walnut A	+$265
EY	light anigre A	+$265
UL	natural maple A	+$265
UQ	light cherry A	+$265
UV	red cherry A	+$265
UX	walnut on cherry A	+$265
9N	santos palisander A	+$1009

Top/Edge Finish: Recut Veneer

For 36" deep x 72" wide (43) with veneer top with veneer edge (W)

RA	light ash A	+$0
RK	mahogany dark A	+$0
RM	mahogany A	+$0

Top/Edge Finish: Wood Veneer		
For 36" deep x 72" wide (43) with veneer top with veneer edge (W)		
V2	beech A	+$215
V3	cherry A	+$215
Z3	warm red cherry A	+$215
Z5	maple A	+$215
A2	white ash A	+$290
2U	light brown walnut A	+$290
ED	aged cherry A	+$290
40	dark brown walnut A	+$290
EG	medium brown walnut A	+$290
EK	medium red walnut A	+$290
EY	light anigre A	+$290
UL	natural maple A	+$290
UQ	light cherry A	+$290
UV	red cherry A	+$290
UX	walnut on cherry A	+$290
9N	santos palisander A	+$1104

Step 5. Edge Finish		
For laminate top with thermoplastic edge (L) or veneer top with thermoplastic edge (C)		
8Q	folkstone grey	+$0
91	white	+$0
98	studio white	+$0
BU	black umber	+$0
CL	cool grey neutral	+$0
CM	cinnamon	+$0
CO	chamomile	+$0
HF	inner tone light	+$0
LT	light tone	+$0
LU	soft white	+$0
MT	medium tone	+$0
SG	slate grey	+$0
WA	wheat	+$0
WL	sandstone	+$0
WN	warm grey neutral	+$0

Step 6. Column Finish		
91	white	+$0
BK	black	+$0
BU	black umber	+$0
CL	cool grey neutral	+$0
CN	metallic champagne	+$10
EH	metallic bronze	+$10
G2	graphite satin	+$0
HF	inner tone light	+$0
LT	light tone	+$0
LU	soft white	+$0
MS	metallic silver	+$10
MT	medium tone	+$0
SG	slate grey	+$0
WN	warm grey neutral	+$0

Step 7. Base Finish		
91	white	+$0
BK	black	+$0
BU	black umber	+$0
CL	cool grey neutral	+$0
CN	metallic champagne	+$10
EH	metallic bronze	+$10
G2	graphite satin	+$0
HF	inner tone light	+$0
LT	light tone	+$0
LU	soft white	+$0
MS	metallic silver	+$10
MT	medium tone	+$0
PA	polished aluminum	+$0
SG	slate grey	+$0
WN	warm grey neutral	+$0

Nelson™ Swag Leg Dining Table Rectangular

NS585

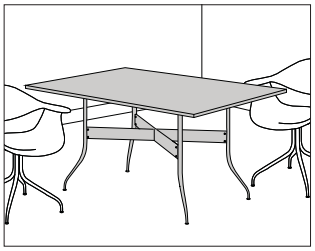

Product Information

Description

This 29 3/8″-high rectangular dining table has a white laminate top or walnut veneer top with a walnut edge band, 4 chrome-finished steel-tube legs, 2 solid walnut stretchers, and adjustable glides. Shipped knocked down.

Dimensions

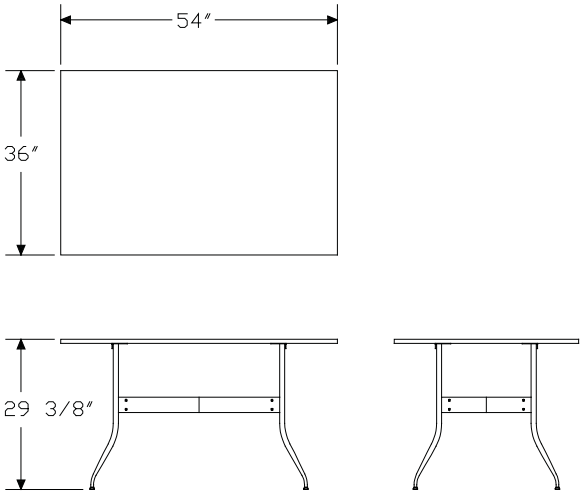

Specification Information

Step 1.

NS5851 A

Step 2. Surface Material

L	laminate A	
W	veneer A	

Prices for Steps 1-2.

NS5851	**L**	$1638
	W	$2075

Step 3. Surface Finish

For laminate (L)

91	white A	+$0

For veneer (W)

OU	walnut A	+$0

Nelson™ Swag Leg Dining Table Round NS585

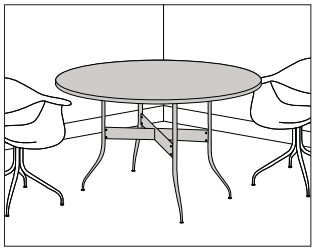

Product Information

Description

This 29 3/8″-high round dining table has a white laminate top or walnut veneer top with a walnut edge band, 4 chrome-finished steel-tube legs, 2 solid walnut stretchers, and adjustable glides. Shipped knocked down.

Dimensions

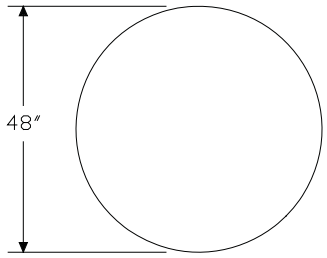

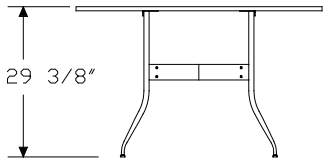

Specification Information

Step 1.

NS5852 A

Step 2. Surface Material

L	laminate A	
W	veneer A	

Prices for Steps 1-2.

NS5852	**L**	$1638
	W	$1966

Step 3. Surface Finish

For laminate (L)

91	white A	+$0

For veneer (W)

OU	walnut A	+$0

Nelson™ Swag Leg Work Table NS585

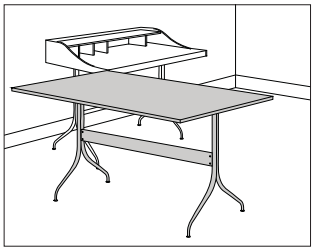

Product Information

Description

This 29 3/8″-high rectangular work table has a white laminate top or walnut veneer top with a walnut edge band, 4 chrome-finished steel-tube legs, 2 solid walnut stretchers, and adjustable glides. Shipped knocked down.

Dimensions

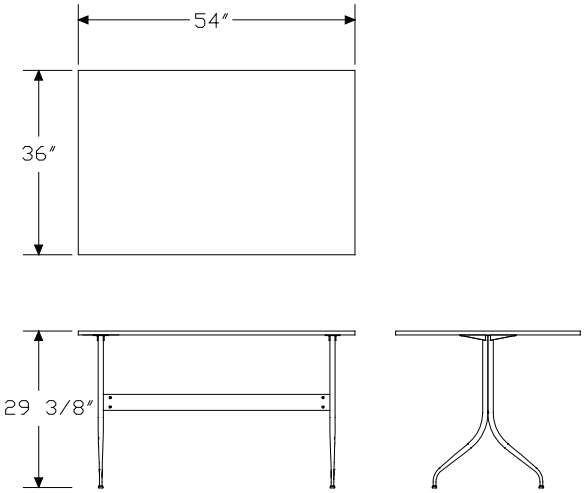

Specification Information

Step 1.

NS5854 A

Step 2. Surface Material

L laminate A

W veneer A

Prices for Steps 1-2.

NS5854	**L**	$1638
	W	$2075

Step 3. Surface Finish

For laminate (L)

91	white A	+$0

For veneer (W)

OU	walnut A	+$0

Nelson™ X-Leg Table NX100.

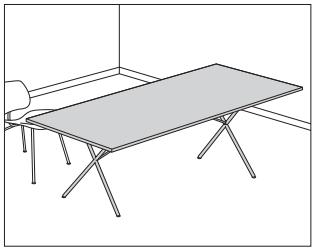

Product Information

Description

This 28½"-high rectangular table has a laminate or veneer top with a veneer edge. Shipped knocked down.

Laminate top veneer edge colors are predetermined:

Top Color—Veneer Edge

White (91)—Walnut (OU)

Studio White (98)—White Ash (A2)

Dimensions

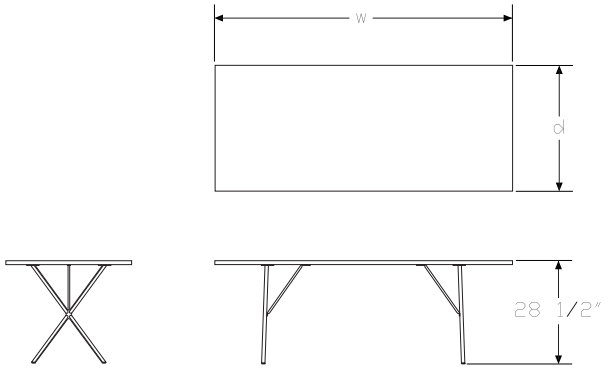

Specification Information

Step 1.

NX100. A

Step 2. Depth

30	30" deep A
36	36" deep A

Step 3. Width

60	60" wide A
72	72" wide A
84	84" wide A

Step 4. Surface Material

L	laminate with veneer edge A
W	veneer with veneer edge A

Prices for Steps 1-4.

			L	W
NX100.	**30**	**60**	$1800	2000
		72	$2000	2500
		84	$2335	3000
	36	**60**	$2000	2500
		72	$2335	3000
		84	$2685	3450

Step 5. Top Finish

Solid-Color Laminate

For laminate with veneer edge (L)

98	studio white A	+$0

Wood Veneer

For veneer with veneer edge (W)

		3060	3072	3084	3660	3672
A2	white ash A	+$250	265	265	265	290
9N	santos palisander A	+$950	1009	1009	1009	1104

		3684
A2	white ash A	+$305
9N	santos palisander A	+$1161

Step 6. Leg Finish

91	white A	+$0
BK	black A	+$0
47	trivalent chrome A	+$55

Air-Table MGA70.

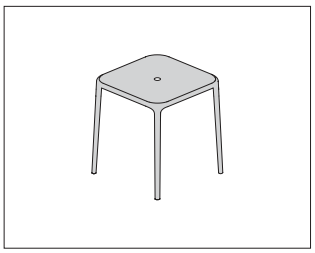

Product Information

Description

This stacking and KD table is made from polypropylene with glass fibre added. It is available in a triangle or square shape. Tables can stack up to 5 high.

Notes

This table is suitable for outdoor use.

Dimensions

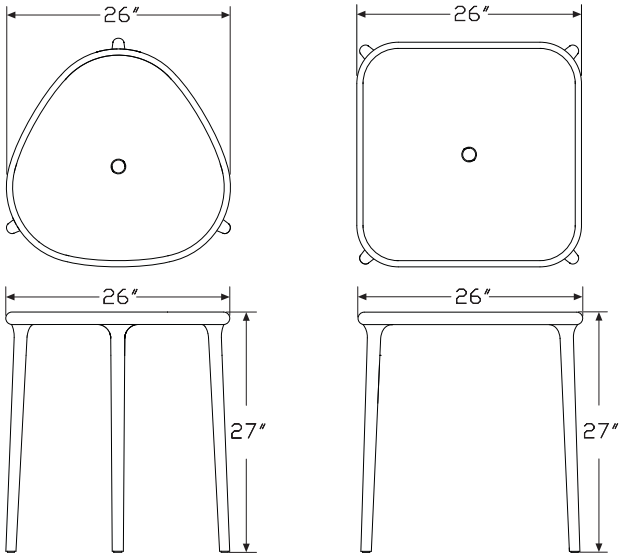

Specification Information

Step 1.

MGA70. A

Step 2. Shape

T	triangular A	
S	square A	

Prices for Steps 1-2.

MGA70.T		$344
	S	$395

Step 3. Finish

YBB	beige A	+$0
YBP	white A	+$0

Baguette Table MGG70.

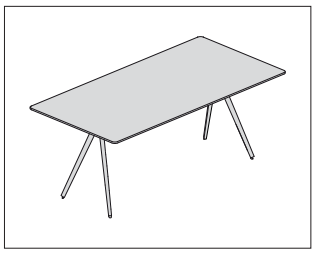

Product Information

Description

The legs of this table are cast aluminum, available polished or painted. The crosspiece is aluminum, also available polished or painted.

Dimensions

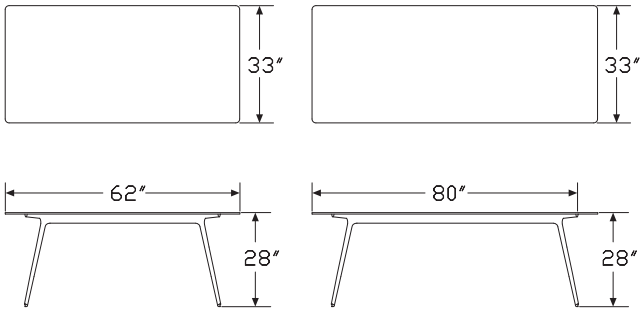

Specification Information

Step 1.

MGG70. A

Step 2. Size

3362	33″ x 62″ rectangular A
3380	33″ x 80″ rectangular A

Prices for Steps 1-2.

MGG70.3362	$1986
3380	$2179

Step 3. Frame Finish

		3362	**3380**
YCB	black A	+$0	0
YCF	white A	+$0	0
YCD	polished A	+$350	351

Step 4. Top Finish

		3362	**3380**
YCB	black A	+$0	0
YCF	white A	+$0	0
YCC	extraclear glass A	+$443	513
YCJ	magis ardesia slate A	+$986	1022
YCG	white glass A	+$1403	1560
YCH	magis quartzite A	+$1428	1753

Central Table MGG80.

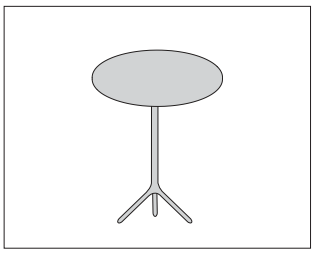

Product Information

Description

This table is available in a round or square shape. The frame is cast aluminum, available polished or painted.

Notes

For square table, polished aluminum frame is not available. Black or white finishes only.

Dimensions

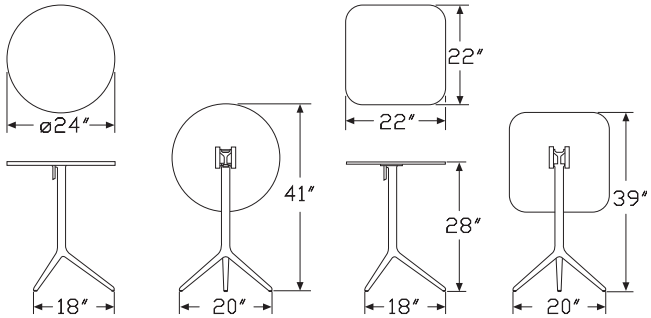

Specification Information

Step 1.

MGG80. A

Step 2. Shape

R	round A	
S	square A	

Prices for Steps 1-2.

MGG80.R		$947
	S	$947

Step 3. Frame/Top Finish

For round (R)

YCB	black A	+$0
YCF	white A	+$91
YCD	polished A	+$493

For square (S)

YCB	black A	+$0
YCF	white A	+$91

Deja-Vu Console MGD72.

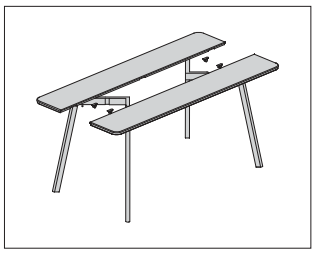

Product Information

Description

The top of this folding console table is available in white, oak, and oak stained wenge finishes. The legs are polished aluminum.

Notes

Console thickness is 5/8″.

Dimensions

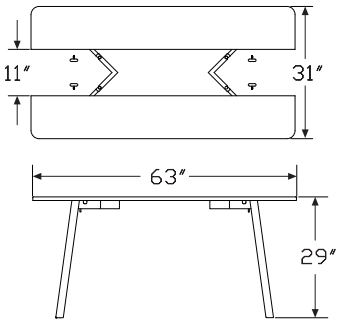

Specification Information

Step 1.

MGD72. A		$2010

Step 2. Top Finish

YFH	white A	+$0
YFC	oak A	+$589
YFG	oak stained wenge A	+$589

Deja-Vu Extending Table MGD71.

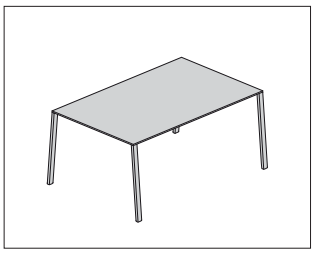

Product Information

Description

The top of this extending table is available in oak, oak stained wenge, and white finishes. The legs are polished aluminum.

Notes

Table thickness is 5/8″.

Dimensions

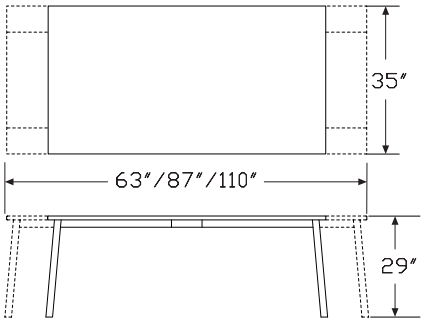

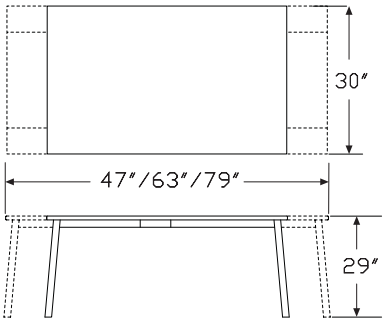

Specification Information

Step 1.

MGD71. A

Step 2. Depth

32	32″ deep A
36	36″ deep A

Prices for Steps 1-2.

MGD71.32		$3371
	36	$3498

Step 3. Top Finish

		32	**36**
YFC	oak A	+$0	0
YFG	oak stained wenge A	+$0	0
YFH	white A	+$127	147

Deja-Vu Table MGD70.

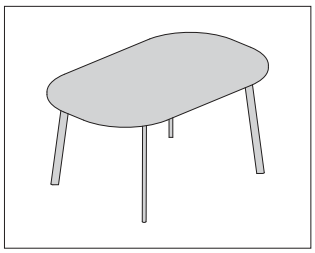

Product Information

Description

This table is shaped as a rounded square or oval. The top finish is available in white, oak, or oak stained wenge. The legs are polished aluminum.

Notes

Table thickness is 7/8".

Dimensions

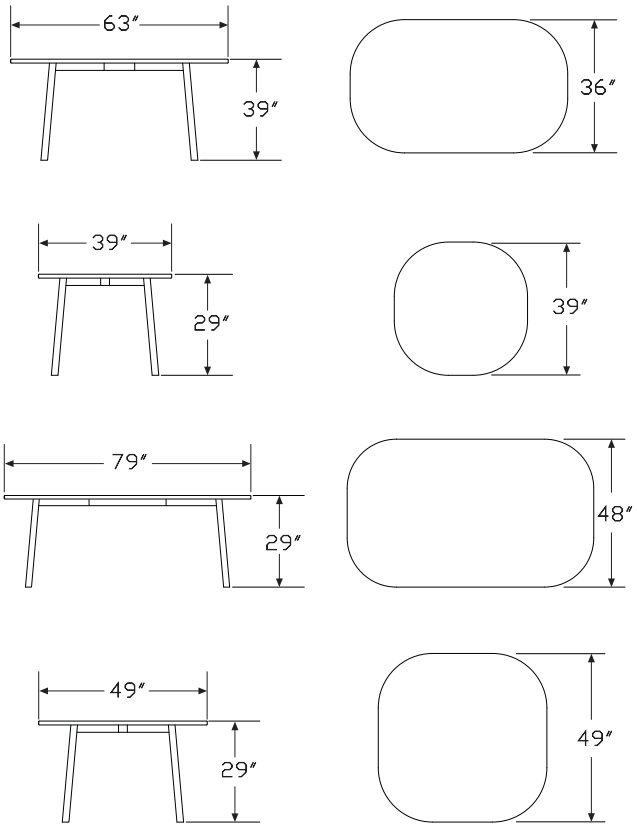

Specification Information

Step 1.

MGD70. A

Step 2. Shape

R rounded square A

V oval A

Step 3. Size

For rounded square (R)

3939 39" x 39" A

4949 49" x 49" A

For oval (V)

6336 63" x 36" A

7948 79" x 48" A

Prices for Steps 1-3.

		3939	6336	4949	7948
MGD70.R		$1156	—	1427	—
	V	—	$1526	—	1884

Step 4. Top Finish

		R3939	V6336	R4949	V7948
YFH	white A	+$0	0	0	0
YFC	oak A	+$0	402	498	442
YFG	oak stained wenge A	+$0	402	498	442

Steelwood Table MGS70.

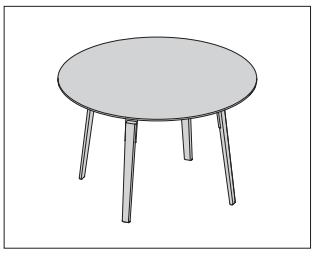

Product Information

Description

This table comes in a square, round, or rectangular shape. The frame is solid beech, available in natural or painted. The top is high pressure laminate. The steel plate joints are painted in epoxy resin.

Notes

Table thickness is 7/8".

Dimensions

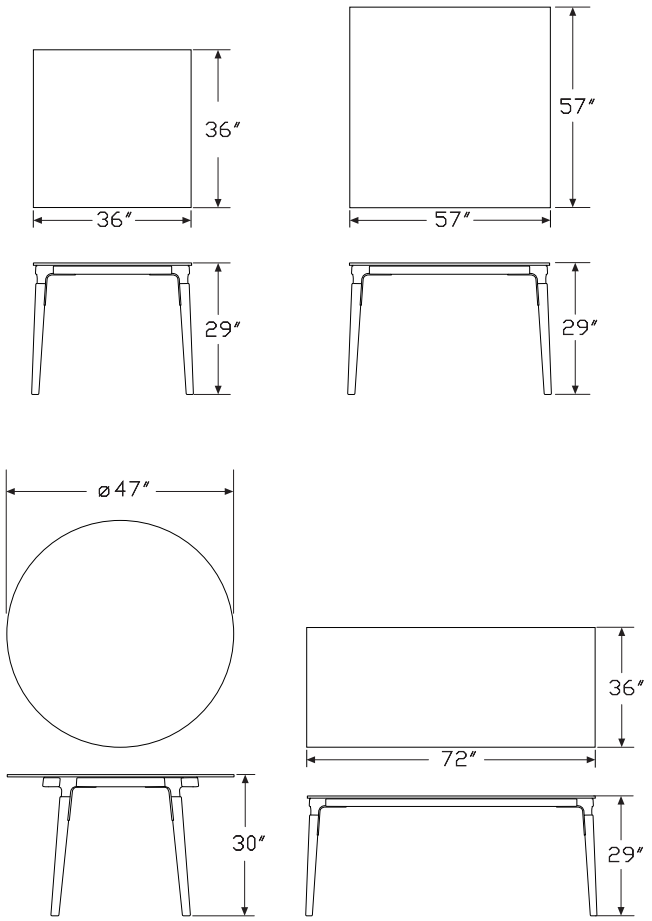

Specification Information

Step 1.

MGS70. A

Step 2. Shape

S3636	square, 36" x 36" A
S5757	square, 57" x 57" A
R	round A
T	rectangular A

Prices for Steps 1-2.

MGS70.	**S3636**	$1455
	S5757	$2256
	R	$1807
	T	$2023

Step 3. Frame/Top Finish

		S3636	S5757	R	T
YMH	black A	+$0	0	0	0
YMJ	white A	+$513	711	1225	1001
YMG	natural beech frame/white top A	+$513	711	1225	1001

Steelwood Table System MGS72.

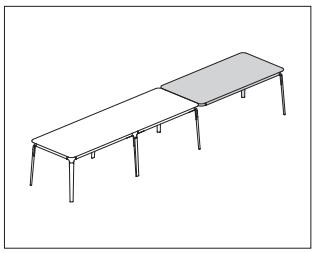

Product Information

Description

This table system extension is an intermediate module that attaches to the table system basic module. It comes with a solid beech frame, available in natural or painted. The top is high pressure laminate. Steel plate joints are painted in epoxy resin.

Notes

Order Magis Steelwood table system (MGS71.) basic module separately.

Dimensions

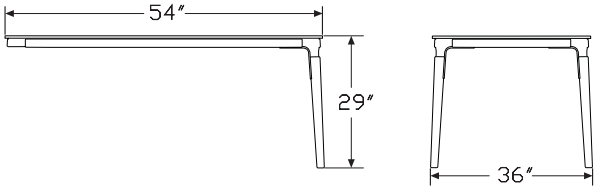

Specification Information

Step 1.

MGS72. A		$1426

Step 2. Frame/Top Finish

YMH	black A	+$0
YMJ	white A	+$767
YMG	natural beech frame/white top A	+$767

Steelwood Extending Table MGS71.

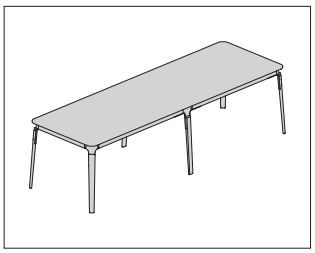

Product Information

Description

This table system is a basic module with a solid beech frame, available in natural or painted. The top is high pressure laminate. Steel plate joints are painted in epoxy resin.

Notes

To extend the table system, order Magis Steelwood table system extension (MGS72.) separately.

Dimensions

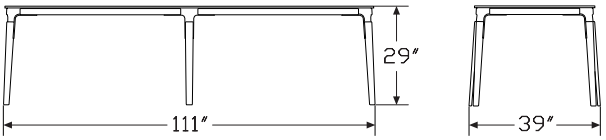

Specification Information

Step 1.

MGS71. A		$3017

Step 2. Frame/Top Finish

YMH	black A	+$0
YMJ	white A	+$1468
YMG	natural beech frame/white top A	+$1468

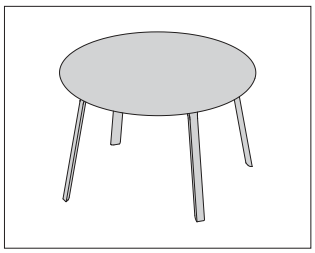

Product Information

Description

The shape of this table is available in round, square, or rectangular. The top of this table comes in medium-density fiberboard, painted or veneered, or high pressure laminate. The legs are made from polypropylene with glass fibre added.

Notes

With a medium-density fiberboard top, table thickness is 1 1/8".

With a high pressure laminate top, table thickness is 1/2".

Dimensions

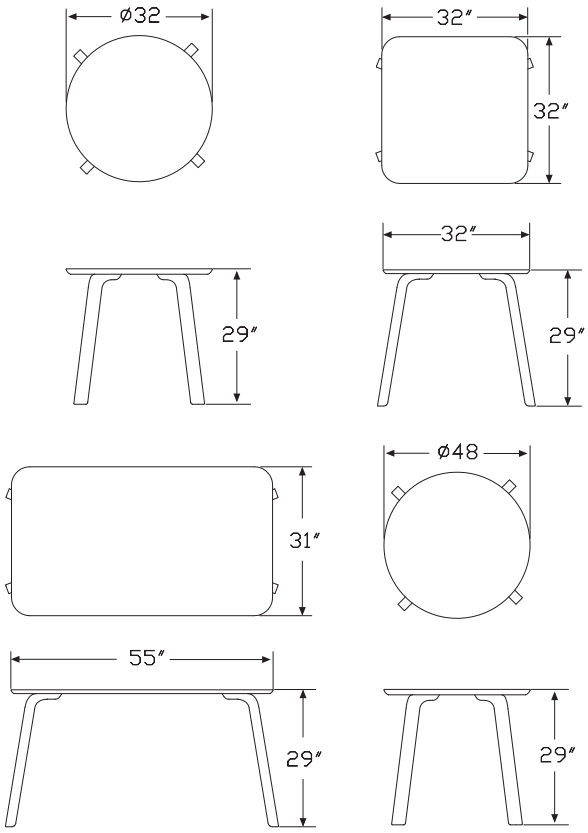

Specification Information

Step 1.

MGF70. A

Step 2. Size/Shape

3200	32" round A	
3232	32" x 32" square A	
3155	31" x 55" rectangular A	
4800	48" round A	

Prices for Steps 1-2.

MGF70.	**3200**	$778
	3232	$889
	3155	$1115
	4800	$1262

Step 3. Leg Finish

YGC	black A	+$0
YGM	white A	+$0

Step 4. Top Finish

For 31" x 55" rectangular (3155) with black (YGC)

YGL	oak painted wenge A	+$518

For 31" x 55" rectangular (3155) with white (YGM)

YGM	white A	+$0
YGD	bleached oak A	+$518

For 32" round (3200) with white (YGM)

YGM	white A	+$0

For 32" round (3200) or 32" x 32" square (3232) with black (YGC)

YGC	black A	+$0

For 48" round (4800) with black (YGC)

YGL	oak painted wenge A	+$478

For 48" round (4800) with white (YGM)

YGM	white A	+$0
YGD	bleached oak A	+$478

Table_One MGE70.

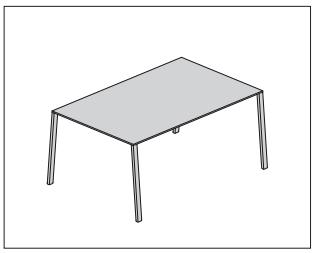

Product Information

Description

The frame of this table is an anodised aluminum tube. Joints are die-cast aluminum, available polished or painted. The top is high pressure laminate and comes in black or white. The base finish is available in polished aluminum and black.

Notes

Table thickness is ½".

Dimensions

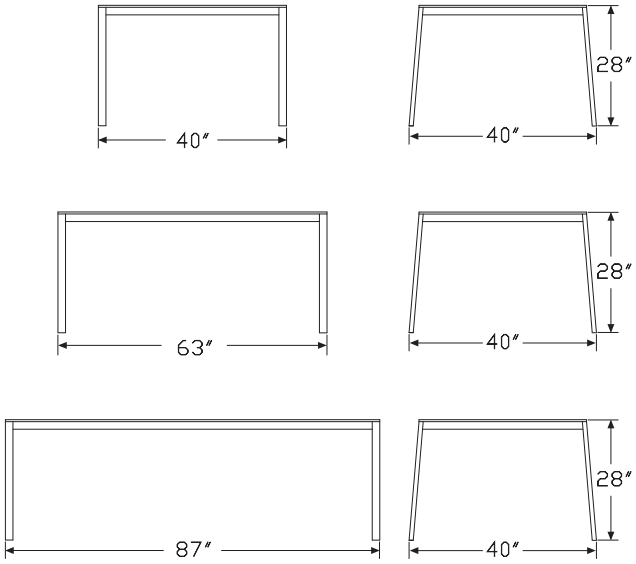

Specification Information

Step 1.

MGE70.

Step 2. Size

4040	40″ x 40″ A	
6340	63″ x 40″	
8740	87″ x 40″ A	

Prices for Steps 1-2.

MGE70.4040		$1733
	6340	$2031
	8740	$2636

Step 3. Base Finish

YHQ	polished aluminum	+$0
YHB	black A	+$0

Step 4. Top Finish

For 40" x 40" (4040) with polished aluminum (YHQ)

YHB	black A	+$0
YHP	white A	+$397

Step 5. Top Finish

For 63" x 40" (6340) with polished aluminum (YHQ)

YHB	black A	+$0
YHP	white	+$554

Step 6. Top Finish

For 87" x 40" (8740) with polished aluminum (YHQ)

YHB	black A	+$0
YHP	white A	+$1413

Step 7. Top Finish

For black (YHB)

YHB	black A	+$0

Table_One Bistro MGE80.

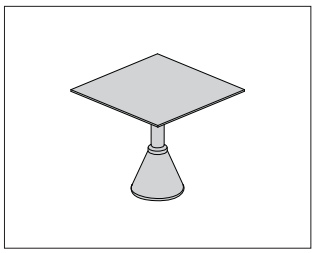

Product Information

Description

The shape of this table is available in round or square with a concrete base. The frame is an anodised aluminum tube. The top is high pressure laminate. Finishes for the top and base are available in polished aluminum and black.

Notes

Table thickness is 1/2".

Dimensions

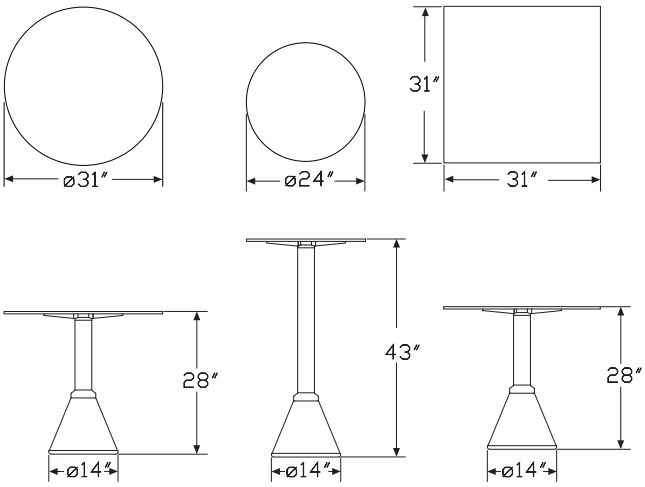

Specification Information

Step 1.

MGE80. A

Step 2. Shape and Height

R29	round 29" high	A
R43	round 43" high	A
S29	square 29" high	A

Prices for Steps 1-2.

MGE80.R29		$1167
	R43	$1065
	S29	$1122

Step 3. Base Finish

YHQ	polished aluminum	A	+$0
YHB	black	A	+$0

Step 4. Top Finish

For polished aluminum (YHQ)

			R29	**R43**	**S29**
YHV	white with black edge	A	+$0	0	0
YHP	white	A	+$199	117	223

For black (YHB)

			R29	**R43**	**S29**
YHB	black	A	+$0	11	0

Tavolo XZ3 Table MGT70.

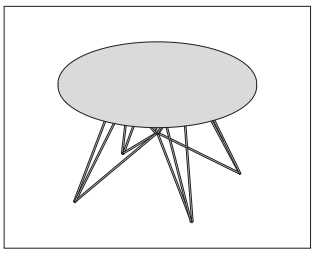

Product Information

Description

This table is available in a round or rectangular shape. The steel rod frame finish comes in chrome or white.

Dimensions

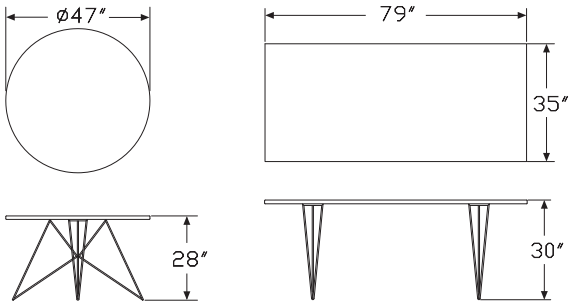

Specification Information

Step 1.

MGT70.

Step 2. Shape

R	round	
T	rectangular A	

Prices for Steps 1-2.

MGT70.R		$1020
	T	$1046

Step 3. Frame Finish

YPB	chrome	+$0
YPC	white A	+$0

She Said Table MGH70.

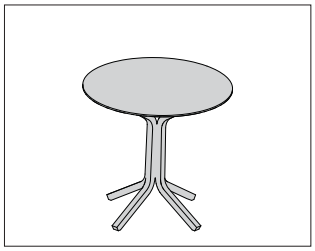

Product Information

Description

This table is made with a tempered glass top and a solid ash or beech base.

Dimensions

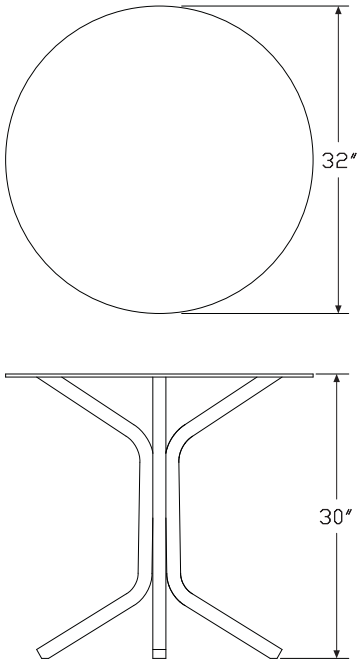

Specification Information

Step 1.

MGH70. A

Step 2. Top Material

YQG	glass top A	

Prices for Steps 1-2.

MGH70.YQG		$1433

Step 3. Frame Finish

YQD	black anilin beech A	+$0
YQF	white lacquered beech A	+$0
YQC	natural ash A	+$55

Branca Table MGR70.

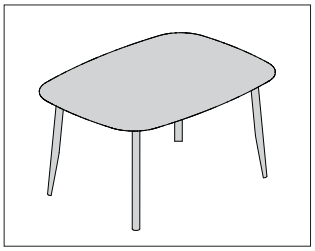

Product Information

Description

The top of this table is made of medium-density fiberboard with an anti scratch white finish. The base is made of solid ash.

Dimensions

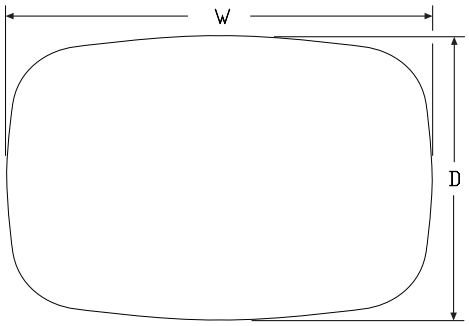

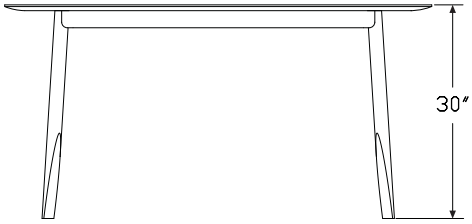

Specification Information

Step 1.

MGR70. A

Step 2. Size

4359 43″ x 59″ A

4371 43″ x 71″ A

Prices for Steps 1-2.		
MGR70.4359		$2875
4371		$3151

Step 3. Frame Finish

YRF	natural wax ash A	+$0

Step 4. Top Finish

YRJ	mdf white lacquered A	+$0

Eames® Molded Plywood Coffee Table Wood Base

CTW.

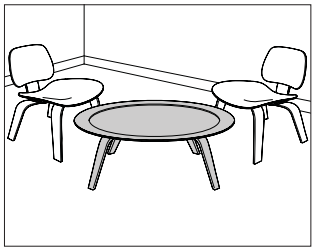

Product Information

Description

This 15 1/2"-high molded plywood table has natural face veneers and hardwood inner plies. It has a 5-ply, 34"-diameter top and an 8-ply 4-leg base. Shipped knocked down.

Notes

Ebony (EN) option is stain on ash veneer; inner plies are not as visible.

Dimensions

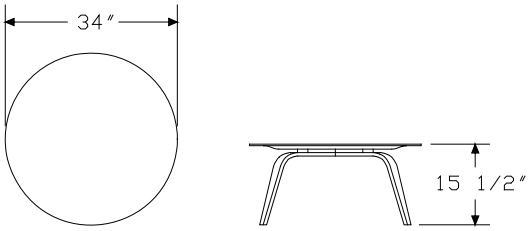

Specification Information

Step 1.

CTW. A		$1028

Step 2. Finish

CX	natural cherry A	+$0
EN	ebony A	+$0
OU	walnut A	+$0
A2	white ash A	+$115

Eames® Wire Base Elliptical Table ETRT.

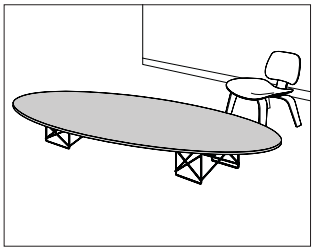

Product Information

Description

This oval table has a 7/8"-thick laminate top, a 13-ply Baltic birch core and edge, and either a powder-coated or chrome wire base.

Dimensions

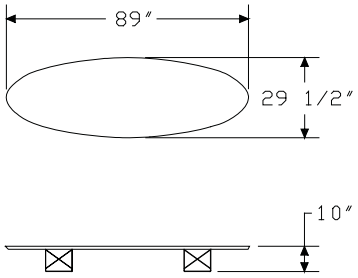

Specification Information

Step 1.

ETRT. A		$895

Step 2. Top Finish

91	white	+$0
98	studio white	+$0
BK	black A	+$0

Step 3. Base Finish

47	trivalent chrome	+$0
91	white	+$0
98	studio white	+$0
BK	black A	+$0

Eames® Wire Base Low Table LTRT.

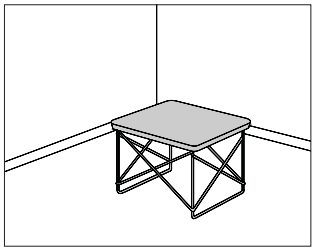

Product Information

Description

This table has a 7/8"-thick laminate or veneer surface with 13-ply Baltic birch core, or 3/4"-thick stone. The base is either powder-coated or chrome wire.

Notes

Stone has a honed finish and knife edge similar in profile to the Baltic birch core edge.

Natural characteristics in stone cause variations in hues, veins, crystals, and distinctive marks. These variations and subtle changes seen as the stone ages are values associated with natural materials. No two tabletops are identically the same; variations in both color and veining are to be expected. Over time the stone may fade in color, staining of the surface may appear, and surface cracks-if not already visible at time of purchase-may appear. Small cracks do not affect the structure of the tabletop.

Dimensions

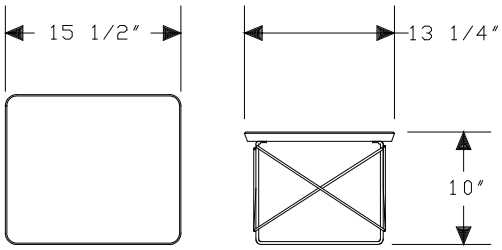

Specification Information

Step 1.

LTRT. A		$205

Step 2. Top Finish

Solid-Color Laminate		
91	white	+$0
98	studio white	+$0
BK	black A	+$0
WH	white A	+$0
Wood Veneer		
OU	walnut A	+$100
A2	white ash A	+$110
9N	santos palisander A	+$255
Stone		
5U	georgia grey marble A	+$1359
HR	wisconsin black marble A	+$1419
DP	georgia white marble A	+$1509
FX	quebec graphite granite A	+$1509

Step 3. Base Finish

91	white	+$0
98	studio white	+$0
BK	black A	+$0
WH	white A	+$0
47	trivalent chrome	+$10

Nelson™ Pedestal Table

5451L
5451S
5451W
5452L
5452S
5452W
5453L
5453S
5453W

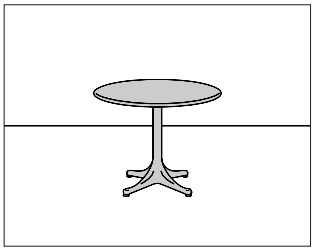

Product Information

Description

This round table has either a 7/8"-thick laminate top with a maple veneer edge, a veneer top and edge, or a 3/4"-thick stone top with a honed finish. Each top has a knife profile edge. Base is aluminum with adjustable glides.

Notes

Natural characteristics in stone cause variations in hues, veins, crystals, and distinctive marks. These variations and subtle changes seen as the stone ages are values associated with natural materials. No two tabletops are identically the same; variations in both color and veining are to be expected. Over time the stone may fade in color, staining of the surface may appear, and surface cracks-if not already visible at time of purchase-may appear. Small cracks do not affect the structure of the tabletop.

Dimensions

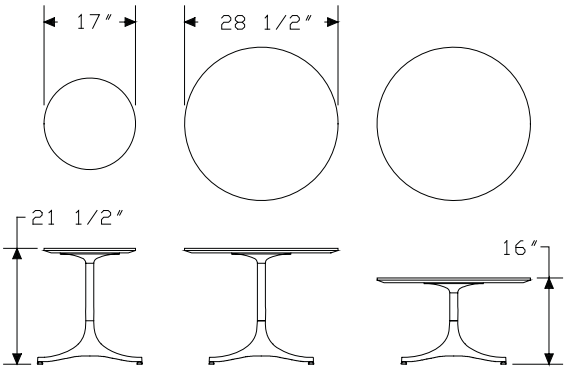

Specification Information

Step 1.

545 A

Step 2. Height/Diameter

1	21 1/2" high x 17" diameter A
3	21 1/2" high x 28 1/2" diameter A
2	16" high x 28 1/2" diameter A

Step 3. Surface Material

L	laminate top A
W	veneer top A
S	stone top A

Prices for Steps 1-3.

5451L	$644
5451W	$767
5451S	$2029
5453L	$787
5453W	$787
5453S	$3237
5452L	$787
5452W	$787
5452S	$3237

Step 4. Base Finish

91	white A	+$0
98	studio white A	+$0
BK	black A	+$0
L	polished aluminum A	+$0

Step 5. Top Finish

For laminate top (L)

91	white A	+$0
98	studio white A	+$0
BK	black A	+$0

For veneer top (W)

		1	**3**	**2**
A2	white ash A	+$66	95	95
9N	santos palisander A	+$215	361	361

For stone top (S)

		1	3	2
5U	georgia grey marble A	+$225	360	360
HR	wisconsin black marble A	+$631	1022	1022
DP	georgia white marble A	+$766	1220	1220
FX	quebec graphite granite A	+$766	1220	1220

Noguchi® Table IN50

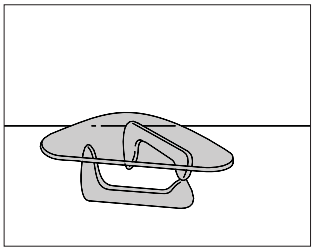

Product Information

Description

This table has a ¾"-thick plate-glass top and a 2-piece wood base. Isamu Noguchi's signature appears on the edge of the glass top. An oval medallion with his signature and the Herman Miller logo is attached to the underside of the base. A certificate of authenticity is included with each table. Shipped knocked down.

Dimensions

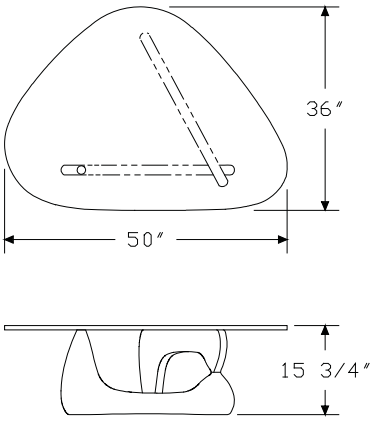

Specification Information

Step 1.

IN50 A		$1658

Step 2. Base Finish

E3	noguchi black A	+$0
OU	walnut A	+$0
CX	natural cherry A	+$45
A2	white ash A	+$95

Claw Table ACL1A

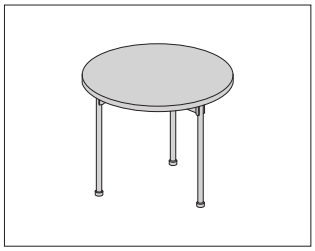

Product Information

Description

The table top is 3/4″ thick clear glass with a metal base.

Dimensions

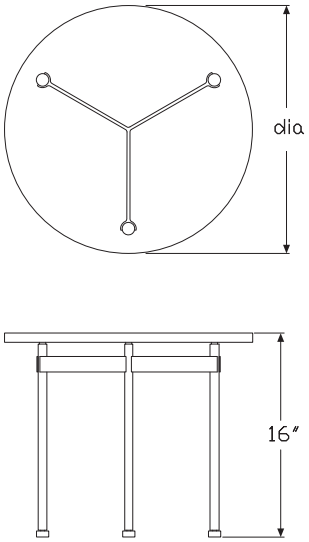

Specification Information

Step 1.

ACL1A A

Step 2. Dimensions

-20	20″ diameter x 16″ high A	
-24	24″ diameter x 16″ high A	
-36	36″ diameter x 16″ high A	

Prices for Steps 1-2.

ACL1A	**-20**	$1783
	-24	$2004
	-36	$2961

Step 3. Base Finish

926	black A	+$0
BNZ	bronze A	+$0
CHR	chrome A	+$0
EH	metallic bronze A	+$0
MS	metallic silver A	+$0
SAC	satin chrome A	+$0

Claw Occasional Table, Square ACL2A

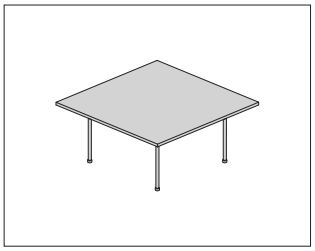

Product Information

Description

The table top is 3/4″ thick clear glass with a metal base.

Dimensions

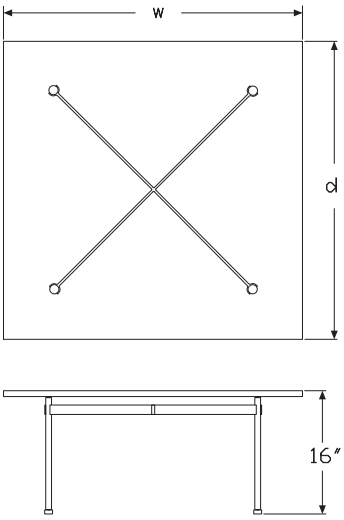

Specification Information

Step 1.

ACL2A A

Step 2. Dimensions

-3636	36″ square x 16″ high A	
-4040	40″ square x 16″ high A	

Prices for Steps 1-2.

ACL2A	**-3636**	$2977
	-4040	$3212

Step 3. Base Finish

926	black A	+$0
BNZ	bronze A	+$0
CHR	chrome A	+$0
EH	metallic bronze A	+$0
MS	metallic silver A	+$0
SAC	satin chrome A	+$0

Full Round Table AWR2-

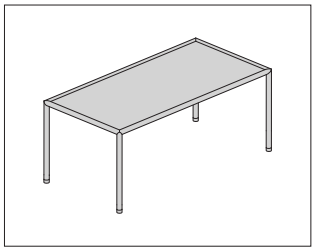

Product Information

Description

This table has a wood top and metal base.

Dimensions

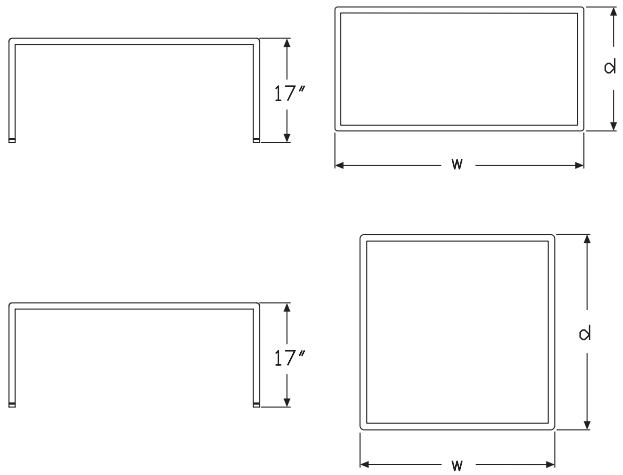

Specification Information

Step 1.

AWR2 A

Step 2. Dimensions

-2020 20″ square x 17″ high A
-2424 24″ square x 17″ high A
-3030 30″ square x 17″ high A
-3020 30″ deep x 20″ wide x 17″ high A
-4020 40″ deep x 20″ wide x 17″ high A

Prices for Steps 1-2.

AWR2-2020	$1413
AWR2-2424	$1602
AWR2-3030	$1926
AWR2-3020	$1769
AWR2-4020	$1892

Step 3. Wood Finish		-2020	-2424	-3030	-3020	-4020
611	champagne maple (natural) A	+$0	0	0	0	0
621	champagne beech (natural) A	+$0	0	0	0	0
642	sundance cherry A	+$0	0	0	0	0
643	caramel cherry A	+$0	0	0	0	0
644	henna cherry A	+$0	0	0	0	0
645	port cherry A	+$0	0	0	0	0
646	cocoa cherry A	+$0	0	0	0	0
654	henna sapele A	+$0	0	0	0	0
655	port sapele A	+$0	0	0	0	0
656	cocoa sapele A	+$0	0	0	0	0
657	espresso sapele A	+$0	0	0	0	0
673	caramel walnut A	+$0	0	0	0	0
674	henna walnut A	+$0	0	0	0	0
675	port walnut A	+$0	0	0	0	0
676	cocoa walnut A	+$0	0	0	0	0
681	champagne hickory (natural) A	+$0	0	0	0	0
2U	light brown walnut A	+$0	0	0	0	0
40	dark brown walnut A	+$0	0	0	0	0
ED	aged cherry A	+$0	0	0	0	0
EK	medium red walnut A	+$0	0	0	0	0
UL	natural maple A	+$0	0	0	0	0
UX	walnut on cherry A	+$0	0	0	0	0
631	champagne anigre (natural) A	+$283	320	385	354	378
632	sundance anigre A	+$283	320	385	354	378
633	caramel anigre A	+$283	320	385	354	378
634	henna anigre A	+$283	320	385	354	378
EY	light anigre A	+$283	320	385	354	378

Step 4. Base Finish		
926	black A	+$0
BNZ	bronze A	+$0
CHR	chrome A	+$0
EH	metallic bronze A	+$0
MS	metallic silver A	+$0
SAC	satin chrome A	+$0

H-Frame Side Table

AWH2G
AWH2S
AWH2W

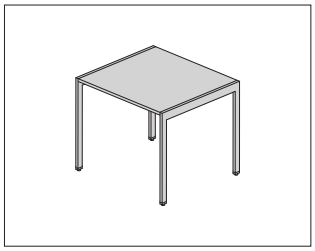

Product Information

Description

This side table has a wood top and metal base. The dimensions are 18″ deep, 20″ wide, and 17″ high.

Dimensions

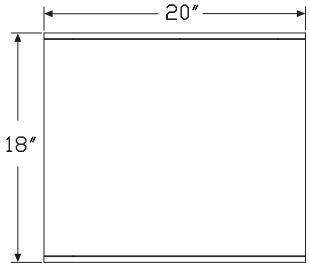

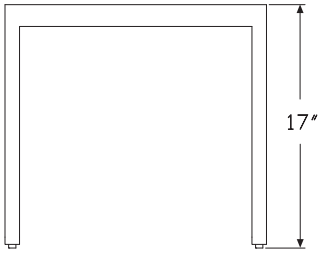

Specification Information

Step 1.

AWH2 A

Step 2. Top Material

W wood top A
G glass top A
S stone top A

Step 3. Dimensions

-1820 18″ deep x 20″ wide x 17″ high side table A

Prices for Steps 1-3.

AWH2W	**-1820**	$1658
AWH2G	**-1820**	$1280
AWH2S	**-1820**	$2238

Step 4. Top Finish		
For wood top (W)		
611	champagne maple (natural) A	+$0
621	champagne beech (natural) A	+$0
642	sundance cherry A	+$0
643	caramel cherry A	+$0
644	henna cherry A	+$0
645	port cherry A	+$0
646	cocoa cherry A	+$0
654	henna sapele A	+$0
655	port sapele A	+$0
656	cocoa sapele A	+$0
657	espresso sapele A	+$0
673	caramel walnut A	+$0
674	henna walnut A	+$0
675	port walnut A	+$0
676	cocoa walnut A	+$0
681	champagne hickory (natural) A	+$0
2U	light brown walnut A	+$0
40	dark brown walnut A	+$0
ED	aged cherry A	+$0
EK	medium red walnut A	+$0
UL	natural maple A	+$0
UX	walnut on cherry A	+$0
631	champagne anigre (natural) A	+$332
632	sundance anigre A	+$332
633	caramel anigre A	+$332
634	henna anigre A	+$332
EY	light anigre A	+$332
For glass top (G)		
CGL	clear glass A	+$0
For stone top (S)		
200	perfato marble A	+$0
250	verde antique marble A	+$0
400	black granite A	+$0
5U	georgia grey marble A	+$0
800	autumn brown granite A	+$0
960	white carrara marble A	+$0
DP	georgia white marble A	+$0
FX	quebec graphite granite A	+$0
HR	wisconsin black marble A	+$0

Step 5. Metal Finish		
BNZ	bronze A	+$0
CHR	chrome A	+$0
SAC	satin chrome A	+$0

H-Frame Coffee Table

AWH2G
AWH2S
AWH2W

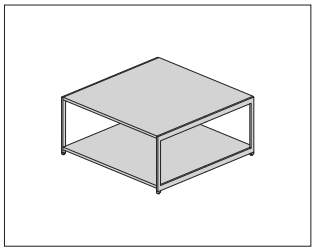

Product Information

Description

This coffee table has a wood top and metal base. The dimensions are 36″ deep, 36″ wide, and 17″ high.

Dimensions

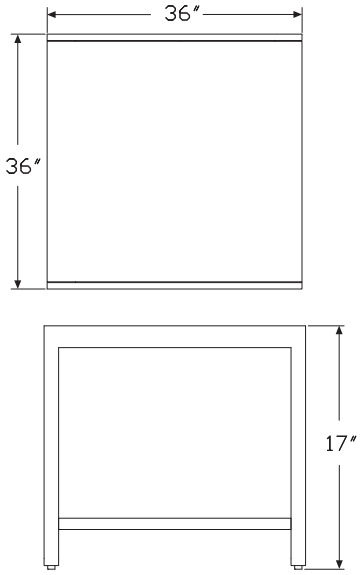

Specification Information

Step 1.

AWH2 A

Step 2. Top Material

W wood top A
G glass top A
S stone top A

Step 3. Dimensions

-3636 36″ deep x 36″ wide x 17″ high coffee table A

Prices for Steps 1-3.

AWH2W	**-3636**	$1658
AWH2G	**-3636**	$1280
AWH2S	**-3636**	$2238

Step 4. Top Finish		
For wood top (W)		
611	champagne maple (natural) A	+$0
621	champagne beech (natural) A	+$0
642	sundance cherry A	+$0
643	caramel cherry A	+$0
644	henna cherry A	+$0
645	port cherry A	+$0
646	cocoa cherry A	+$0
654	henna sapele A	+$0
655	port sapele A	+$0
656	cocoa sapele A	+$0
657	espresso sapele A	+$0
673	caramel walnut A	+$0
674	henna walnut A	+$0
675	port walnut A	+$0
676	cocoa walnut A	+$0
681	champagne hickory (natural) A	+$0
2U	light brown walnut A	+$0
40	dark brown walnut A	+$0
ED	aged cherry A	+$0
EK	medium red walnut A	+$0
UL	natural maple A	+$0
UX	walnut on cherry A	+$0
631	champagne anigre (natural) A	+$570
632	sundance anigre A	+$570
633	caramel anigre A	+$570
634	henna anigre A	+$570
EY	light anigre A	+$570
For glass top (G)		
CGL	clear glass A	+$0
For stone top (S)		
200	perfato marble A	+$0
250	verde antique marble A	+$0
400	black granite A	+$0
5U	georgia grey marble A	+$0
800	autumn brown granite A	+$0
960	white carrara marble A	+$0
DP	georgia white marble A	+$0
FX	quebec graphite granite A	+$0
HR	wisconsin black marble A	+$0

Step 5. Metal Finish		
BNZ	bronze A	+$0
CHR	chrome A	+$0
SAC	satin chrome A	+$0

I-Beam Coffee Table

AWB2G
AWB2M

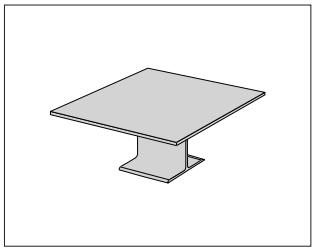

Product Information

Description

This coffee table has an aluminum base and glass top.

Dimensions

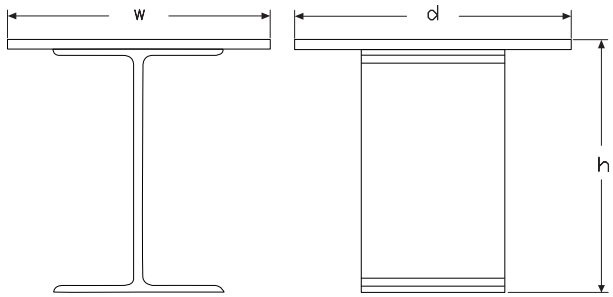

Specification Information

Step 1.

AWB A

Step 2. Table Type

2	coffee table A	

Step 3. Top Material

M	marble top A	
G	glass top A	

Step 4. Size

For coffee table (2) with glass top (G)

-363615	36" deep x 36" wide x 15 1/4" high A	
-404015	40" deep x 40" wide x 15 1/4" high A	

For coffee table (2) with marble top (M)

-363616	36" deep x 36" wide x 16 " high A	
-404016	40" deep x 40" wide x 16 " high A	

Prices for Steps 1-4.

AWB2M	**-363616**	$5295
	-404016	$5745
AWB2G	**-363615**	$2750
	-404015	$2909

Step 5. Top Finish

For marble top (M)

200	perfato marble A	+$0
250	verde antique marble A	+$0
400	black granite A	+$0
5U	georgia grey marble A	+$0
800	autumn brown granite A	+$0
960	white carrara marble A	+$0
DP	georgia white marble A	+$0
FX	quebec graphite granite A	+$0
HR	wisconsin black marble A	+$0

For glass top (G)

CGL	3/4" thick clear glass A	+$0

I-Beam Side Table AWB1Z

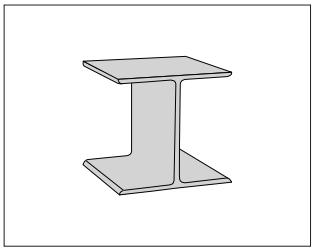

Product Information

Description

This side table has an aluminum base and no top.

Dimensions

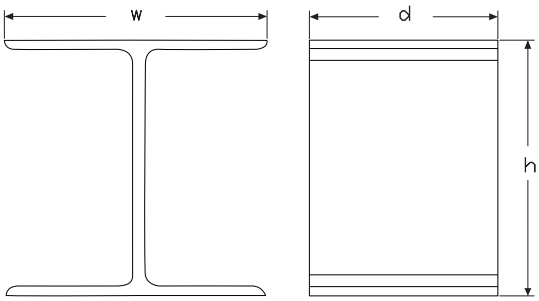

Specification Information

Step 1.

AWB A

Step 2. Table Type

1 side table A

Step 3. Top Material

Z no top A

Step 4. Size

-161615 16″ deep x 16″ wide x 14½″ high A

-181815 18″ deep x 18″ wide x 14½″ high A

Prices for Steps 1-4.

AWB1Z	**-161615**	$1938
	-181815	$2170

Eames® Storage Unit

ESU100
ESU150
ESU201
ESU230
ESU420

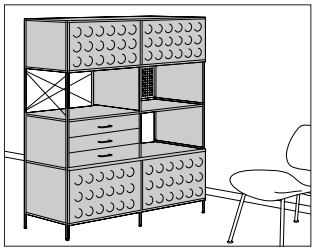

Product Information

Description

This storage unit is available in 1, 2, or 4 units high and 1 or 2 units wide with 5 configurations of shelves, drawers, and enclosed storage for books or binders. Some units have dimpled plywood doors; plywood drawer units and shelves; painted side and back panels; and steel uprights, cross supports, and perforated panels. The storage unit has adjustable glides.

Dimensions

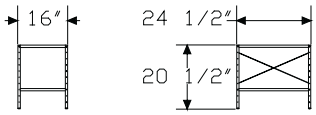

1 Unit High 1 Unit Wide, NC, W9 Finish

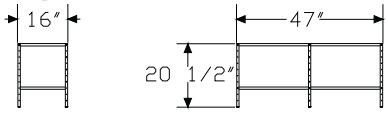

1 Unit High 2 Units Wide, NC, W9 Finish

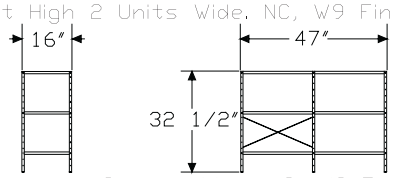

2 Units High 2 Units Wide, NC, W9 Finish

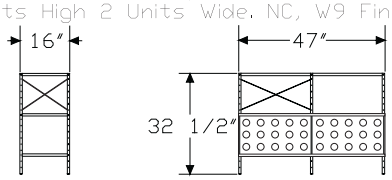

2 Units High 2 Units Wide With Doors, NC Finish

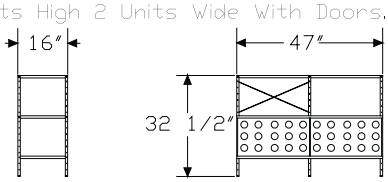

2 Units High 2 Units Wide With Doors, W9 Finish

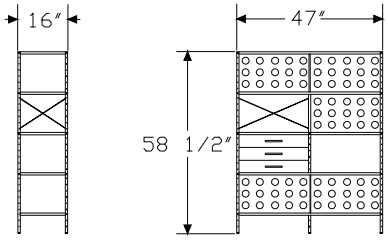

4 Units High 2 Units Wide With Doors and Drawers, NC Finish

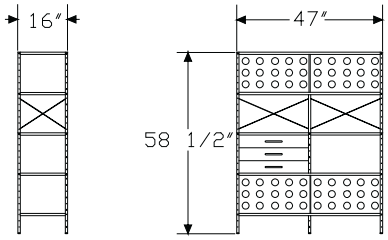

4 Units High 2 Units Wide With Doors and Drawers, W9 Finish

Specification Information

Step 1.

ESU A

Step 2. Configuration

150. 1 unit high, 1 unit wide A
100. 1 unit high, 2 units wide A
201. 2 units high, 2 units wide A
230. 2 units high, 2 units wide, with doors A
420. 4 units high, 2 units wide A

Prices for Steps 1-2.

ESU150.	$694
ESU100.	$1169
ESU201.	$1528
ESU230.	$1993
ESU420.	$3681

Step 3. Frame Finish

		150.	100.	201.	230.	420.
ZC	zinc plated A	+$0	0	0	0	0
BK	black A	+$49	49	77	77	157

Step 4. Surface Finish

NC	natural color A	+$0
W9	multi-color A	+$0

Nelson™ Basic Cabinet Series BC1618
16.5 x 18

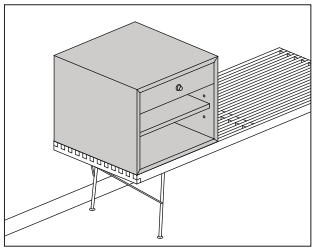

Product Information

Description

This veneer cabinet provides small item storage and can be used freestanding or placed on top of the Nelson™ platform bench.

Dimensions

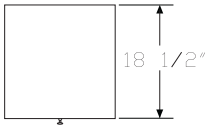

platform bench-mount base (B)

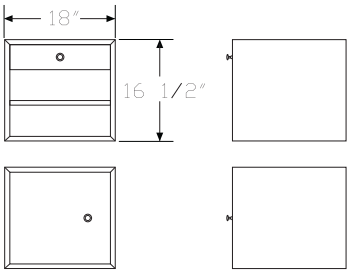

wood leg (W)

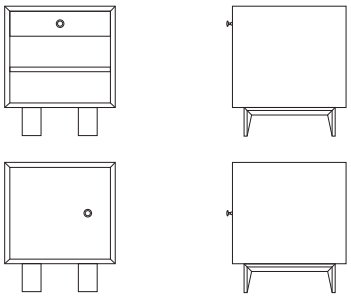

Specification Information

Step 1.

BC1618. A

Step 2. Type

B	open cabinet with 1 drawer A
C	closed cabinet, left-hinged door A
D	closed cabinet, right-hinged door A

Step 3. Leg/Base Option

W	wood leg A
B	platform bench-mount base A

Step 4. Pull

A	aluminum alloy pull, silver A

Prices for Steps 1-4.

			A
BC1618.	**B**	**W**	$865
		B	$865
	C	**W**	$865
		B	$865
	D	**W**	$865
		B	$865

Step 5. Finish

2U	light brown walnut A	+$0
OK	natural oak A	+$0

Nelson™ Basic Cabinet Series BC2424

24 x 24

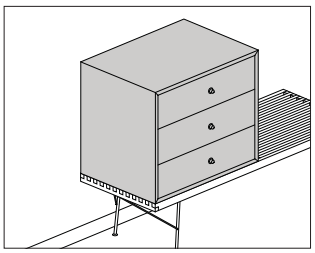

Product Information

Description

This veneer cabinet provides small item storage and can be used freestanding or placed on top of a Nelson™ platform bench.

Dimensions

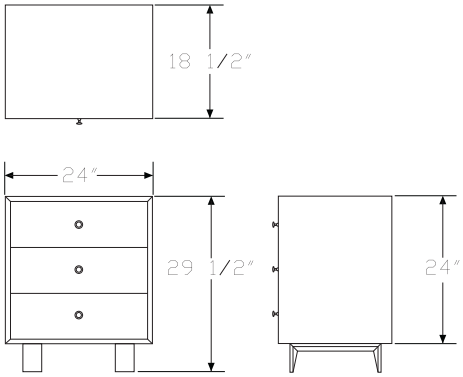

Specification Information

Step 1.

BC2424. A

Step 2. Type

E	3-drawer cabinet A	

Step 3. Leg/Base Option

W	wood leg A	
B	platform bench-mount base A	

Step 4. Pull

A	aluminum alloy pull, silver A	

Prices for Steps 1-4.

				A
BC2424.	**E**	**W**		$1926
		B		$1776

Step 5. Finish

2U	light brown walnut A	+$0
OK	natural oak A	+$0

Nelson™ Basic Cabinet Series BC2434
24 x 34

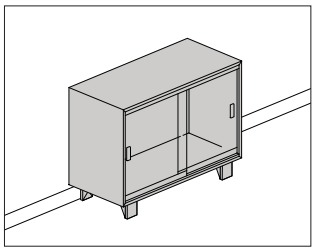

Product Information

Description

This veneer cabinet has 2 sliding glass doors and can be used freestanding or placed on top of a Nelson™ platform bench.

Dimensions

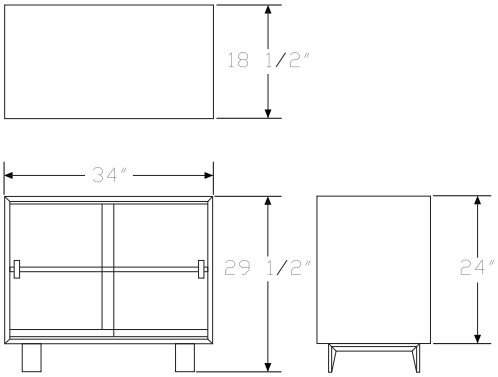

Specification Information

Step 1.

BC2434. A

Step 2. Type

J	closed cabinet, 2 sliding doors A	

Step 3. Leg/Base Option

W	wood leg A	
B	platform bench-mount base A	

Step 4. Pull

N	no pull A	

Prices for Steps 1-4.

			N
BC2434.	**J**	**W**	$2107
		B	$1957

Step 5. Finish

2U	light brown walnut A	+$0
OK	natural oak A	+$0

Nelson™ Basic Cabinet Series 24 x 34 Bookcase

BC2400

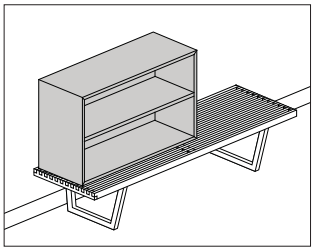

Product Information

Description

This 12″-deep veneer open bookcase sits on a Nelson™ platform bench and has a shelf that adjusts in 2″ increments over a 6″ range.

Dimensions

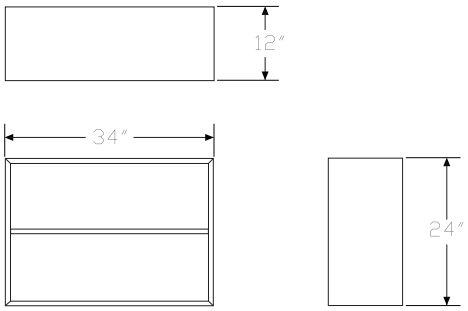

Specification Information

Step 1.

BC2400. A

Step 2. Type

H	open bookcase A	

Step 3. Leg/Base Option

B	platform bench-mount base A	

Step 4. Pull

N	no pull A	

Prices for Steps 1-4.

		N
BC2400. H B		$1145

Step 5. Finish

2U	light brown walnut A	+$0
OK	natural oak A	+$0

Nelson™ Basic Cabinet Series BC3440
34 x 40

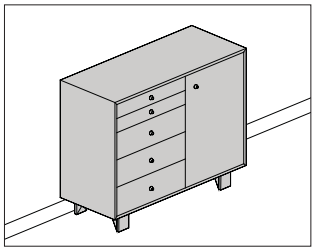

Product Information

Description

This veneer freestanding cabinet is available with 5 drawers on the left side with a single door on the right, or with 2 full width drawers over double drawers.

Notes

5-drawer cabinet with door option (L) has 2 shelves behind the door. Each shelf adjusts in 2" increments over a 6" range.

Cabinet, 2 drawers over 2 doors option (M) has 1 shelf that adjusts in 2" increments over a 6" range.

Dimensions

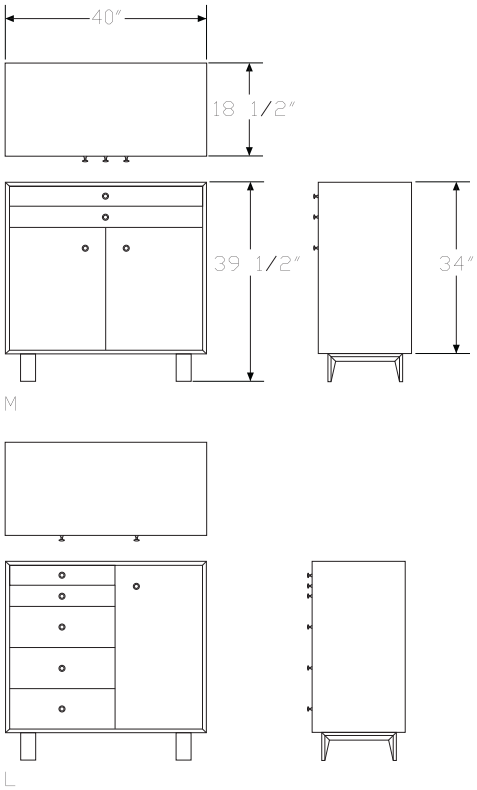

Specification Information

Step 1.

BC3440. A

Step 2. Type

L	5-drawer cabinet with door A	
M	cabinet, 2 drawers over 2 doors A	

Step 3. Leg Option

W	wood leg A	

Step 4. Pull

A	aluminum alloy pull, silver A	

Prices for Steps 1-4.

			A
BC3440.	**L**	**W**	$2661
	M	**W**	$2439

Step 5. Finish

2U	light brown walnut A	+$0
OK	natural oak A	+$0

Nelson™ Thin Edge Buffet TE2167

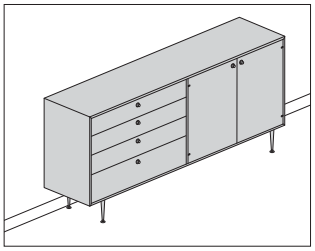

Product Information

Description

This buffet has polished aluminum legs. The four drawers have solid wood construction with soft closing slides. The two-door cabinet portion has 2 adjustable shelves.

Notes

The unfinished back panel (BCF) option is intended for applications where this chest will be placed against a wall.

For the walnut and dark brown walnut combination (RT) option, the case finish is walnut (OU) and the drawer or door fronts are dark brown walnut (40).

For the white ash and walnut combination (UR) option, the case finish is white ash (Z2) and the drawer or door fronts are walnut (OU).

Dimensions

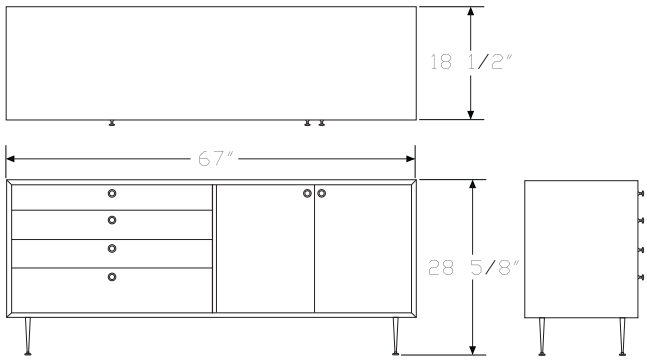

Specification Information

Step 1.

TE2167. A

Step 2. Type

R	4 drawer buffet with 2 doors	A

Step 3. Leg

P	7" polished aluminum	A
H	7" polished aluminum with height adjustable glide	A

Step 4. Pull

A	aluminum alloy pull, silver	A
C	metal pull, white	A

Prices for Steps 1-4.

			A	C
TE2167.	**R**	**P**	$7680	7730
		H	$7705	7755

Step 5. Case Finish

OU	walnut	A	+$0
A2	white ash	A	+$384
RT	walnut and dark brown walnut combination	A	+$384
UR	white ash and walnut combination	A	+$384
9N	santos palisander	A	+$8991

Step 6. Back Panel

BCF	unfinished (matte black)	A	+$0
BCG	finished alike	A	+$260

Nelson™ Thin Edge Cabinet TE2134

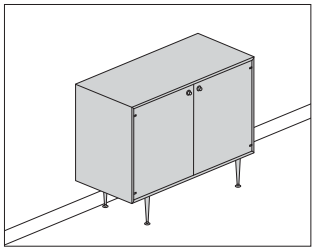

Product Information

Description

This 2-door cabinet has polished aluminum legs and one adjustable shelf.

Notes

The unfinished back panel (BCF) option is intended for applications where this chest will be placed against a wall.

For the walnut and dark brown walnut combination (RT) option, the case finish is walnut (OU) and the drawer or door fronts are dark brown walnut (40).

For the white ash and walnut combination (UR) option, the case finish is white ash (Z2) and the drawer or door fronts are walnut (OU).

Dimensions

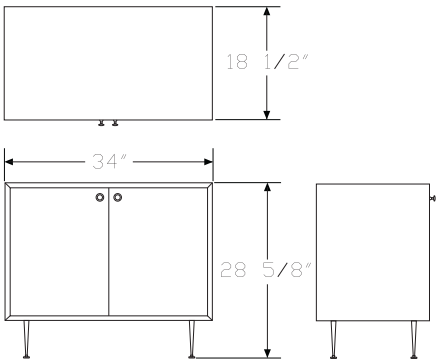

Specification Information

Step 1.

TE2134. A

Step 2. Type

G	enclosed cabinet with 2 hinged doors A

Step 3. Leg

P	7" polished aluminum A
H	7" polished aluminum with height adjustable glide A

Step 4. Pull

A	aluminum alloy pull, silver A
C	metal pull, white A

Prices for Steps 1-4.

			A	C
TE2134.	**G**	**P**	$3638	3688
		H	$3663	3713

Step 5. Case Finish

OU	walnut A	+$0
A2	white ash A	+$182
RT	walnut and dark brown walnut combination A	+$182
UR	white ash and walnut combination A	+$182
9N	santos palisander A	+$6305

Step 6. Back Panel

BCF	unfinished (matte black) A	+$0
BCG	finished alike A	+$155

Nelson™ Thin Edge Chest TE2100

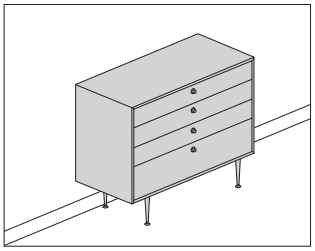

Product Information

Description

This chest has polished aluminum legs and either 3 or 4 drawers. Drawers are solid wood construction with soft closing slides.

Notes

The unfinished back panel (BCF) option is intended for applications where this chest will be placed against a wall.

For the walnut and dark brown walnut combination (RT) option, the case finish is walnut (OU) and the drawer or door fronts are dark brown walnut (40).

For the white ash and walnut combination (UR) option, the case finish is white ash (Z2) and the drawer or door fronts are walnut (OU).

Dimensions

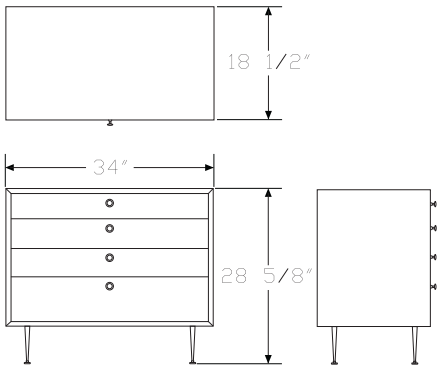

Specification Information

Step 1.

TE2100. A

Step 2. Type

S	4 drawer chest	A
T	3 drawer chest	A

Step 3. Leg

P	7" polished aluminum	A
H	7" polished aluminum with height adjustable glide	A

Step 4. Pull

A	aluminum alloy pull, silver	A
C	metal pull, white	A

Prices for Steps 1-4.

			A	C
TE2100.	**S**	**P**	$4655	4705
		H	$4680	4730
	T	**P**	$4421	4471
		H	$4446	4496

Step 5. Case Finish

OU	walnut	A	+$0
A2	white ash	A	+$233
RT	walnut and dark brown walnut combination	A	+$233
UR	white ash and walnut combination	A	+$233
9N	santos palisander	A	+$3118

Step 6. Back Panel

BCF	unfinished (matte black)	A	+$0
BCG	finished alike	A	+$155

Nelson™ Miniature Chest 6 Drawer

NC521

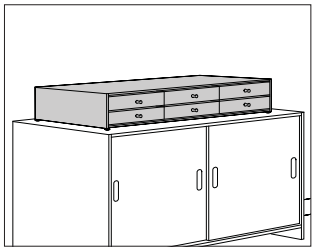

Product Information

Description

This chest is placed on top of a table, desk, cabinet, or credenza. It has 6 small drawers with white metal knobs and rests on 3/8″ solid-brass glides. The cabinet is rosewood-stained teak with a white laminate top.

Dimensions

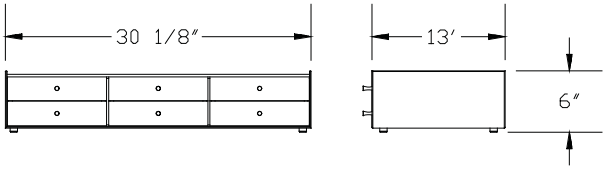

Specification Information

Step 1.

NC5215 A	$1313

Nelson™ Miniature Chest 6 Drawer Pedestal Base NC551

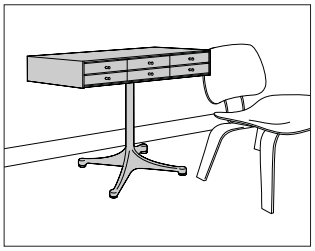

Product Information

Description

This chest has a 4-star, white metal base with adjustable glides. It has 6 small drawers with white metal knobs. The cabinet is rosewood-stained teak with a white laminate top.

Dimensions

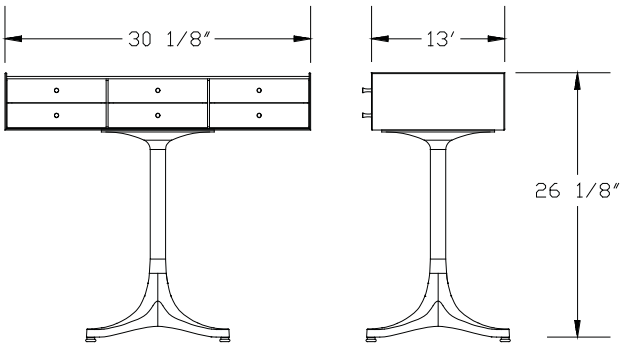

Specification Information

Step 1.

NC5515	A	$1785

Nelson™ Miniature Chest 9 Drawer

NC521

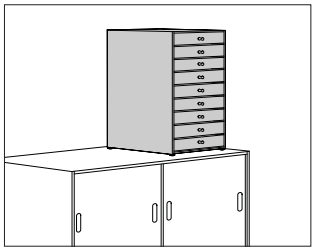

Product Information

Description

This chest is placed on top of a table, desk, cabinet, or credenza. It has 9 small drawers with white metal knobs and rests on 3/8″ solid-brass glides. The cabinet and top are rosewood-stained teak.

Dimensions

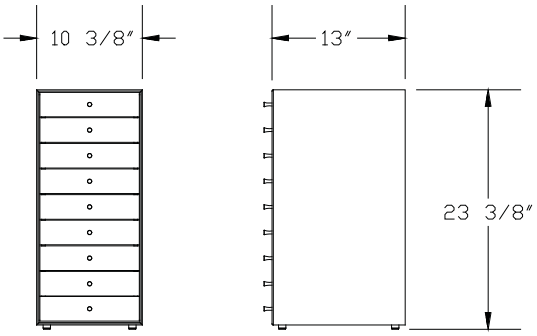

Specification Information

Step 1.

NC5217 A	$1365

Nelson™ Miniature Chest 9 Drawer Pedestal Base NC551

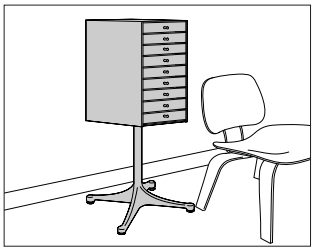

Product Information

Description

This chest has a 4-star, white metal base with adjustable glides. It has 9 small drawers with white metal knobs. The cabinet and top are rosewood-stained teak.

Dimensions

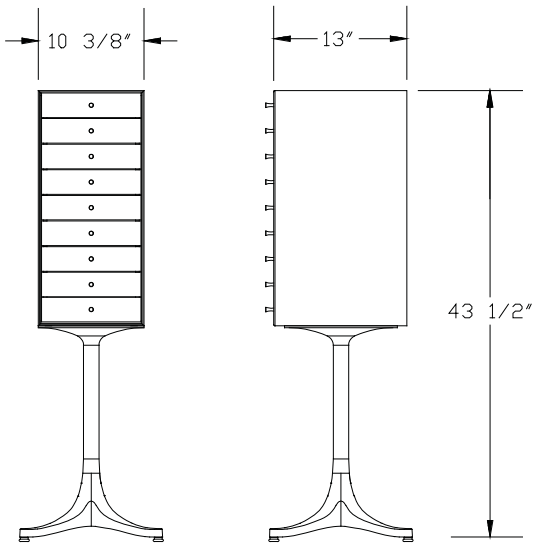

Specification Information

Step 1.

NC5517	A	$1838

Steelwood Shelving System MGS90.

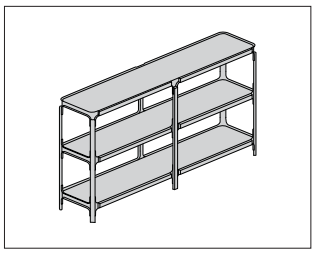

Product Information

Description

This shelving system has a natural beech frame, available in natural or painted. Steel plate joints are painted in epoxy resin. Shelves are painted medium-density fiberboard.

Dimensions

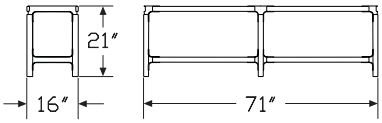

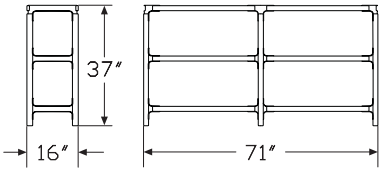

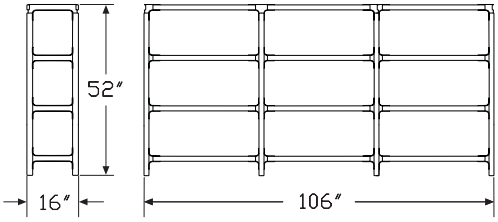

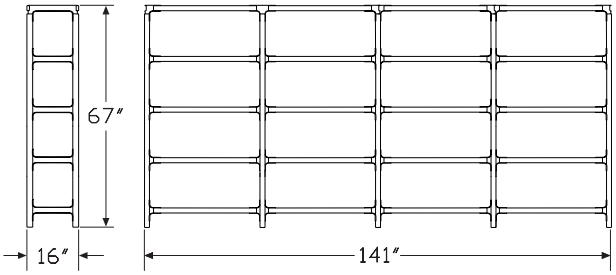

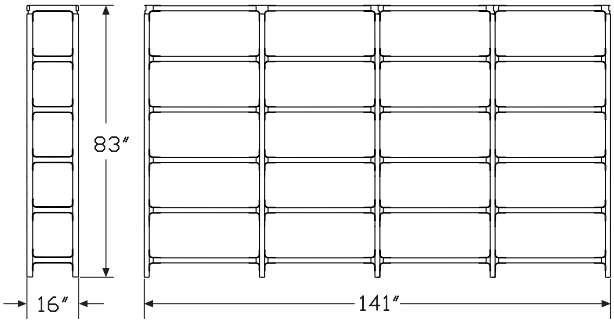

Specification Information

Step 1.

MGS90. A

Step 2. Number of Shelves

2	2 shelves A
3	3 shelves A
4	4 shelves A
5	5 shelves A
6	6 shelves A

Step 3. Number of Modules

1	1 Module A
2	2 modules A
3	3 modules A
4	4 modules A

Prices for Steps 1-3.

		1	2	3	4
MGS90.	**2**	$856	1585	2279	2993
	3	$1216	2230	3250	4279
	4	$1634	2958	4303	5617
	5	$2121	3784	5448	7116
	6	$2625	4681	6763	8799

Step 4. Frame/Shelf Finish

YMB	black A	+$0
YMC	natural beech/white A	+$0
YMF	white A	+$0

Eames® Hang-It-All® HIA

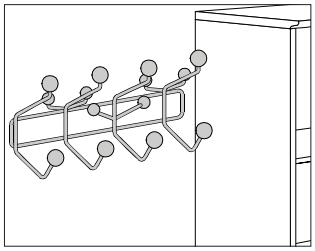

Product Information

Description

This white, steel-rod frame has 14 solid wooden balls in 9 different colors: yellow, mustard, blue, green, red, pastel pink, bold pink, purple, and black. Attachment hardware is included.

Dimensions

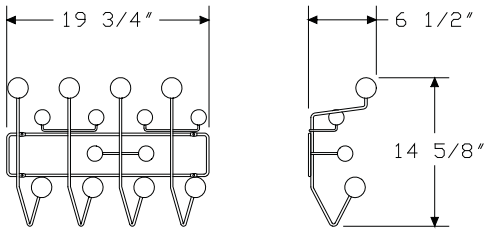

Specification Information

Step 1.

HIA	$179

Eames® Molded Plywood Folding Screen

FSW.

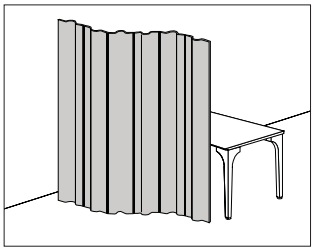

Product Information

Description

This 6-paneled, 5-ply screen has natural face veneers with lightweight hardwood inner plies. It stands alone to create standing or seated privacy and divisions within an environment. Each molded plywood section is connected by woven polypropylene mesh.

Notes

Ebony (EN) option is stain on ash veneer; inner plies are not as visible.

Dimensions

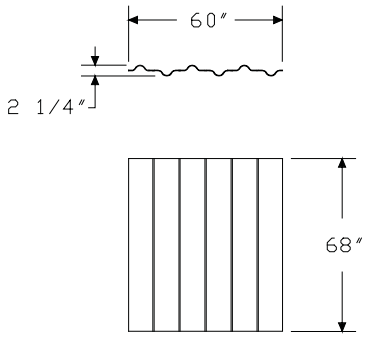

Specification Information

Step 1.

FSW. A		$2285

Step 2. Surface Finish

CX	natural cherry A	+$0
EN	ebony A	+$0
OU	walnut A	+$0
A2	white ash A	+$225

Eames® Aluminum Group Side Chair Outdoor

EA506
EA508

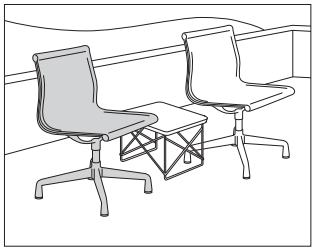

Product Information

Description

This outdoor low back side chair has a lightweight aluminum frame and suspended mesh upholstery. It has a 4-star base with adjustable glides. The chair is available with or without arms.

Dimensions

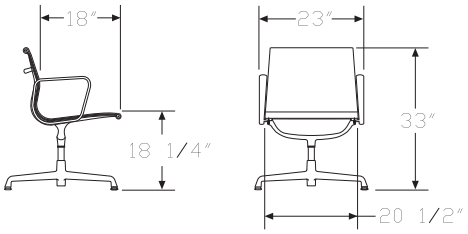

Specification Information

Step 1.

EA50 A

Step 2. Arms

6	no arms A	
8	arms A	

Step 3. Swivel

S	swivel base A	
F	fixed base, no swivel A	

Prices for Steps 1-3.

EA506	**S**	$1191
	F	$1268
EA508	**S**	$1565
	F	$1642

Step 4. Base/Frame Finish

91	white A	+$91
G2	graphite satin A	+$91

Step 5. Fabric

Price Category 6	+$162

Air-Chair Outdoor MGA10.

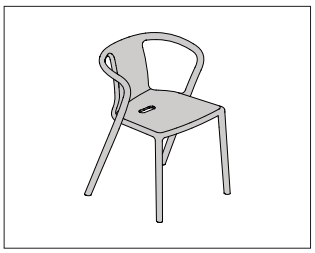

Product Information

Description

This outdoor stacking chair is available with or without arms and is made from polypropylene with glass fibre added. Chairs can stack up to 10 high. Package contains 4 chairs.

Dimensions

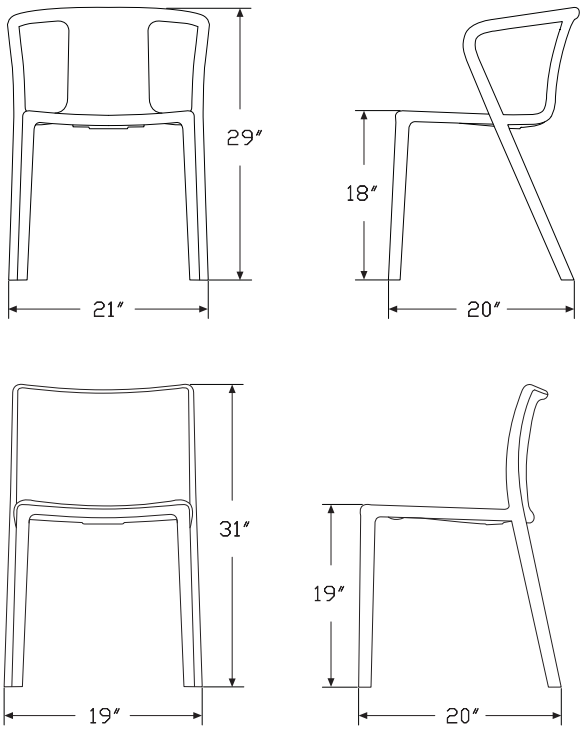

Specification Information

Step 1.

MGA10. A

Step 2. Arms

N	no arms A	
A	arms A	

Prices for Steps 1-2.

MGA10. N		$728
	A	$808

Step 3. Finish

For no arms (N)

YBB	beige A	+$0
YBC	black A	+$0
YBD	brick A	+$0
YBF	dark green A	+$0
YBG	fuchsia A	+$0
YBH	green A	+$0
YBL	light green A	+$0
YBM	orange A	+$0
YBN	sky blue A	+$0
YBP	white A	+$0

For arms (A)

YBB	beige A	+$0
YBG	fuchsia A	+$0
YBH	green A	+$0
YBJ	grey anthracite A	+$0
YBL	light green A	+$0
YBM	orange A	+$0
YBN	sky blue A	+$0
YBP	white A	+$0

Chair_ One Outdoor MGE10.

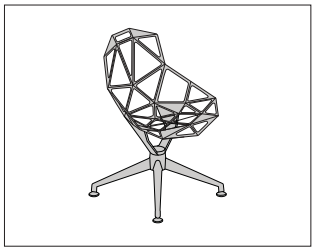

Product Information

Description

This outdoor chair accepts a four-star or concrete base.

Notes

Concrete is the only base with a swivel self-returning mechanism.

Dimensions

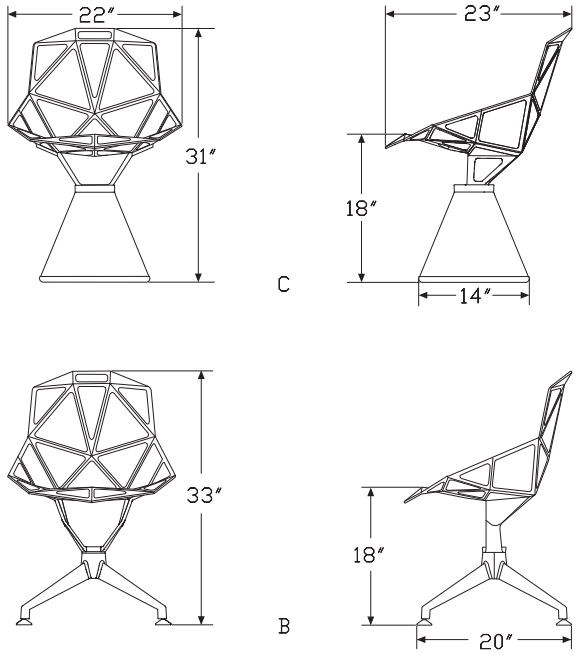

Specification Information

Step 1.

MGE10. A

Step 2. Base

B	4-star base A
C	concrete base A

Step 3. Seat/Leg Material

For 4-star base (B)

PA	painted aluminum seat and legs A

For concrete base (C)

PC	painted aluminum seat/natural concrete base A

Prices for Steps 1-3.

		PA	PC
MGE10.B		$703	—
	C	—	$738

Step 4. Seat Finish

For concrete base (C)

YHB	black A	+$0
YHH	grey anthracite A	+$0
YHM	red A	+$0
YHP	white A	+$0

For 4-star base (B)

YHB	black A	+$0
YHP	white A	+$0

Chair_ One Stacking Outdoor MGE10.

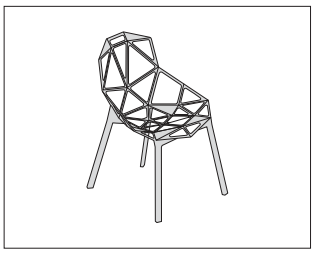

Product Information

Description

This outdoor chair comes with a four-leg base. Chairs can stack up to 8 high. Package contains 2 chairs.

Dimensions

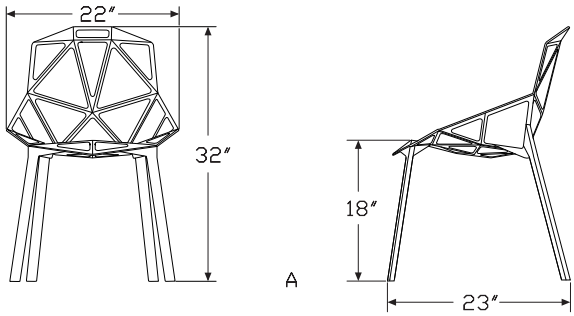

A

Specification Information

Step 1.

MGE10.A A

Step 2. Seat/Leg Material

PP	painted aluminum seat/polished aluminum legs A	
PA	painted aluminum seat and legs A	

Prices for Steps 1-2.

MGE10.A	**PP**	$995
	PA	$1035

Step 3. Seat Finish

For painted aluminum seat/polished aluminum legs (PP)

YHH	grey anthracite A	+$0
YHM	red A	+$0
YHP	white A	+$0

For painted aluminum seat and legs (PA)

YHB	black A	+$0
YHP	white A	+$0

Folding Air-Chair Outdoor MGA11.

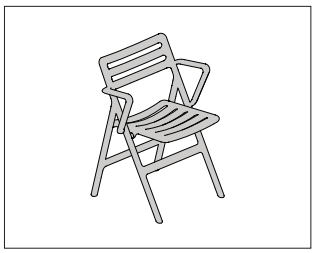

Product Information

Description

This outdoor folding chair is made from polypropylene with glass fibre added. It is available with or without arms. Package contains 2 chairs.

Dimensions

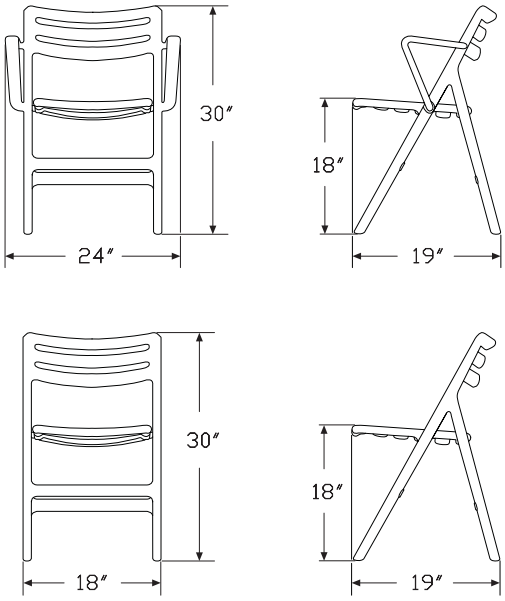

Specification Information

Step 1.

MGA11. A

Step 2. Arms

N	no arms A	
A	arms A	

Prices for Steps 1-2.

MGA11.N		$402
	A	$446

Step 3. Finish

YBB	beige A	+$0
YBH	green A	+$0
YBM	orange A	+$0
YBN	sky blue A	+$0
YBP	white A	+$0

Chair First Outdoor MGF01.

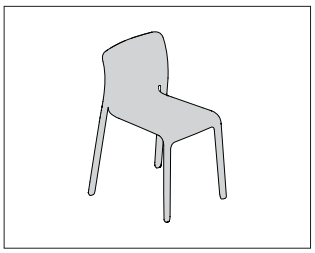

Product Information

Description

This outdoor stacking chair is made from polypropylene with glass fibre added. Chairs can stack up to 10 high. Package contains 4 chairs.

Dimensions

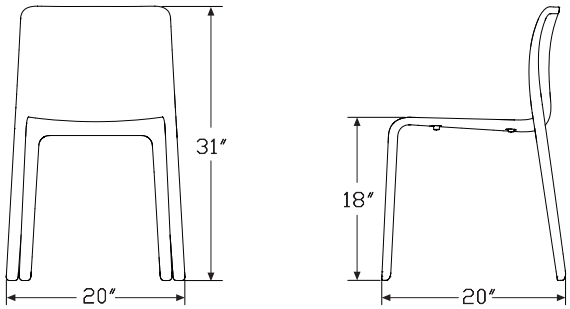

Specification Information

Step 1.

MGF01. A	$1028

Step 2. Finish

YGB	beige A	+$0
YGC	black A	+$0
YGF	blue A	+$0
YGG	lime green A	+$0
YGH	olive green A	+$0
YGJ	purple A	+$0
YGK	red A	+$0
YGM	white A	+$0

Deja-Vu Chair Outdoor MGD10.

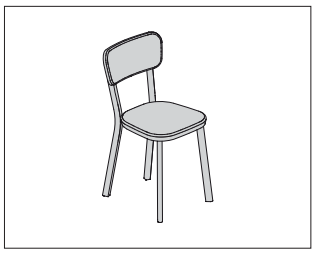

Product Information

Description

This outdoor chair has a painted aluminum outer back. The leg, seat, and back finishes are available in black and white.

Dimensions

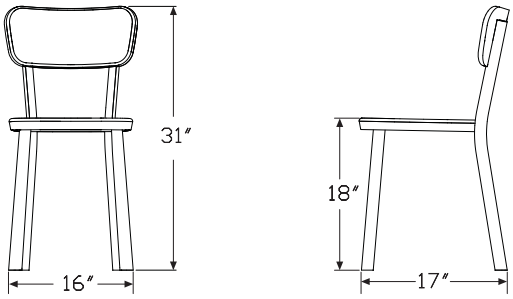

Specification Information

Step 1.

MGD10. A

Step 2. Outer Back Material

PA	painted aluminum outer back A	

Prices for Steps 1-2.

MGD10.PA	$711

Step 3. Leg/Seat/Back Finish

YFB	black A	+$0
YFH	white A	+$0

Paso Doble Chair Outdoor MGP10.

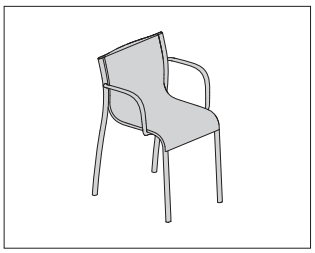

Product Information

Description

This outdoor stacking chair has an aluminum frame and is available with or without arms. The arms and crosspieces come in die-cast aluminum. Chairs can stack up to 5 high. Package contains 2 chairs.

Dimensions

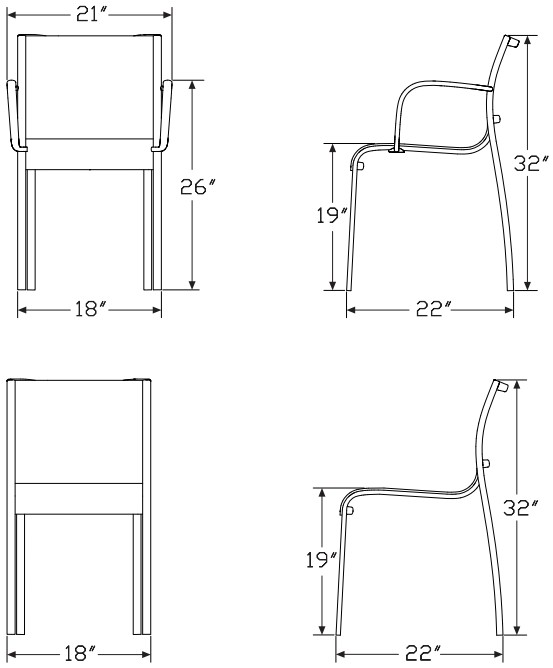

Specification Information

Step 1.

MGP10.

Step 2. Arms

N	no arms
A	arms

Prices for Steps 1-2.

MGP10.	**N**	$1238
	A	$1710

Step 3. Chair Color

YKB	black	+$0
YKJ	white	+$0

Eames® Aluminum Group Lounge Chair Outdoor — EA516

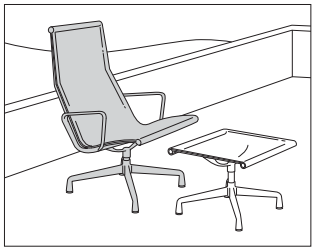

Product Information

Description

This outdoor lounge chair has a lightweight aluminum frame and suspended mesh upholstery. It has a 4-star swiveling base with adjustable glides.

Dimensions

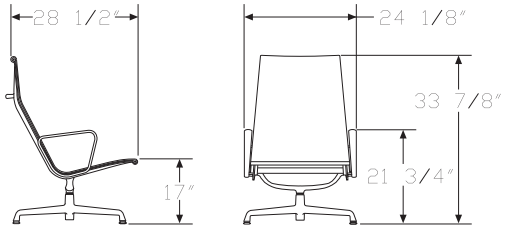

Specification Information

Step 1.

EA516 A		$1821

Step 2. Base/Frame Finish

91	white A	+$140
G2	graphite satin A	+$140

Step 3. Fabric

Price Category 6	+$214

Eames® Aluminum Group Ottoman Outdoor

EA523

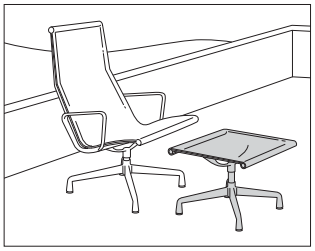

Product Information

Description

This outdoor ottoman has a lightweight aluminum frame and suspended mesh upholstery. It has a 4-star base with adjustable glides.

Dimensions

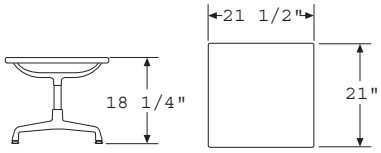

Specification Information

Step 1.

EA523 A		$870

Step 2. Base/Frame Finish

91	white A	+$72
G2	graphite satin A	+$72

Step 3. Fabric

Price Category 6	+$113

Paso Doble Chaise Lounge Outdoor

MGP50.

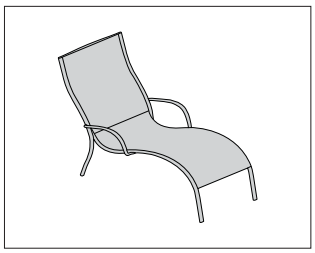

Product Information

Description

This outdoor stacking chaise lounge comes with an aluminum frame. The arms and crosspieces are made of die-cast aluminum. Chairs can stack up to 6 high.

Dimensions

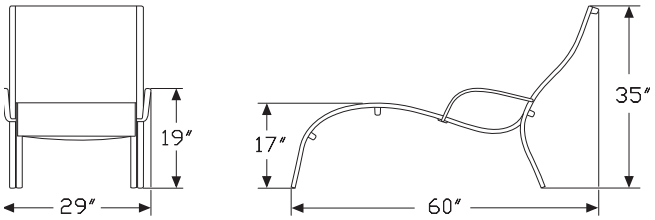

Specification Information

Step 1.

MGP50. A		$2066

Step 2. Chair Color

YKB	black A	+$0
YKJ	white A	+$0

Paso Doble Low Chair Outdoor MGP11.

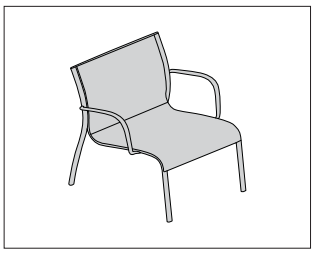

Product Information

Description

This outdoor stacking low chair comes with an aluminum frame and is available with or without arms. The arms and crosspieces are die-cast aluminum. Chairs can stack up to 6 high. Package contains 2 chairs.

Dimensions

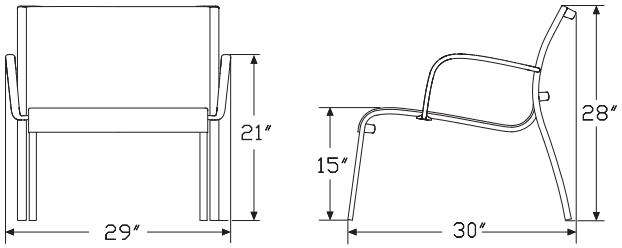

Specification Information

Step 1.

MGP11. A

Step 2. Arms

N	no arms A	
A	arms A	

Prices for Steps 1-2.

MGP11.	**N**	$1698
	A	$2244

Step 3. Chair Color

YKB	black A	+$0
YKJ	white A	+$0

Paso Doble Low Chair High Back Outdoor MGP12.

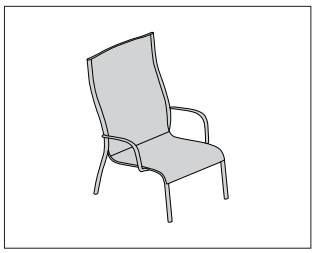

Product Information

Description

This outdoor stacking low chair with high back is available with or without arms. The frame is aluminum and the arms and crosspieces are die-cast aluminum. Chairs can stack up to 6 high. Package contains 2 chairs.

Dimensions

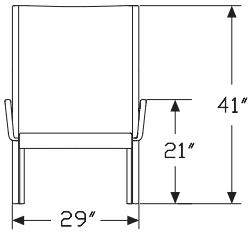

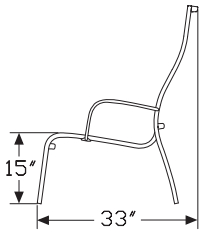

Specification Information

Step 1.

MGP12. A		$2450

Step 2. Chair Color

YKB	black A	+$0
YKJ	white A	+$0

Spun Rotating Chair MGN00.

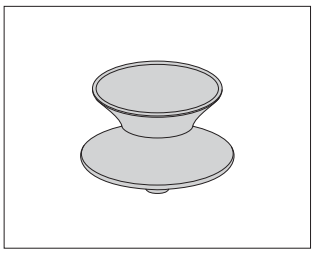

Product Information

Description

This rotating low chair is made from polypropylene.

Notes

Chair is suitable for outdoor use.

Dimensions

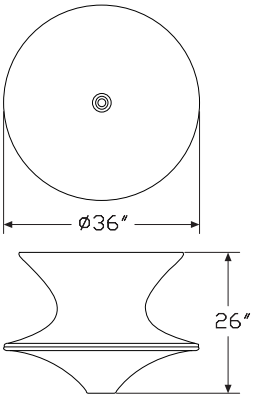

Specification Information

Step 1.

MGN00. A		$635

Step 2. Finish

YLB	dark purple A	+$0
YLC	purple A	+$0
YLD	red A	+$0
YLF	yellow A	+$0

Paso Doble Ottoman, Outdoor MGP13.

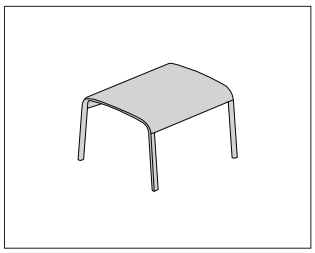

Product Information

Description

This outdoor footstool has an aluminum frame. The crosspieces are made of die-cast aluminum. Package contains 2 footstools.

Dimensions

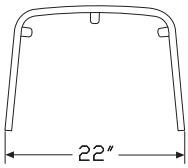

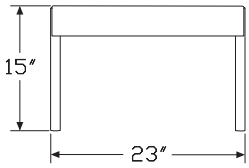

Specification Information

Step 1.

MGP13. A		$1278

Step 2. Stool Color

YKB	black A	+$0
YKJ	white A	+$0

Paso Doble Stool Outdoor MGP30.

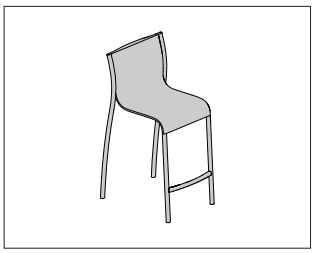

Product Information

Description

This outdoor stacking bar stool comes in high and medium height and is available with or with arms. The frame is aluminum, and the arms, crosspieces, and footrest are die-cast aluminum. Bar stools can stack up to 6 high. Package contains 2 bar stools.

Dimensions

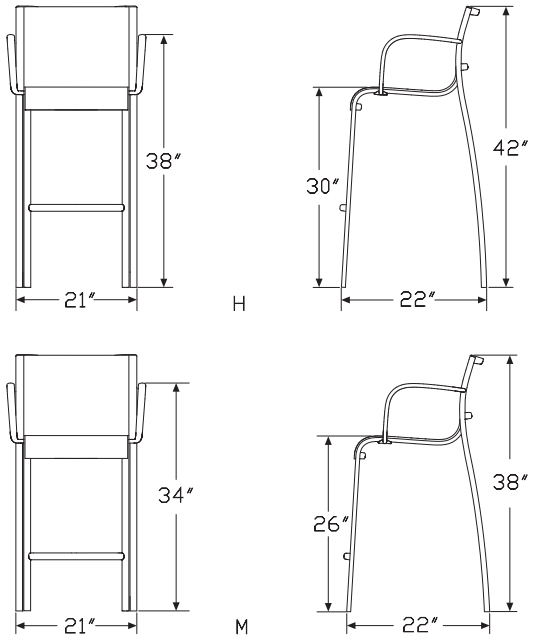

Specification Information

Step 1.

MGP30.

Step 2. Height

H	high height
M	medium height

Step 3. Arms

N	no arms
A	arms A

Prices for Steps 1-3.

		N	A
MGP30.	**H**	$1442	1910
	M	$1396	1852

Step 4. Stool Color

YKB	black	+$0
YKJ	white	+$0

Stool_One Outdoor MGE30.

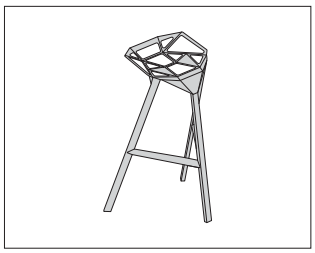

Product Information

Description

This outdoor bar stool comes in a high and medium height. The seat and leg finishes available are polished aluminum and anodised aluminum black. Bar stools can stack up to 4 high. Package contains 2 bar stools.

Notes

Stool is flame retardant.

Dimensions

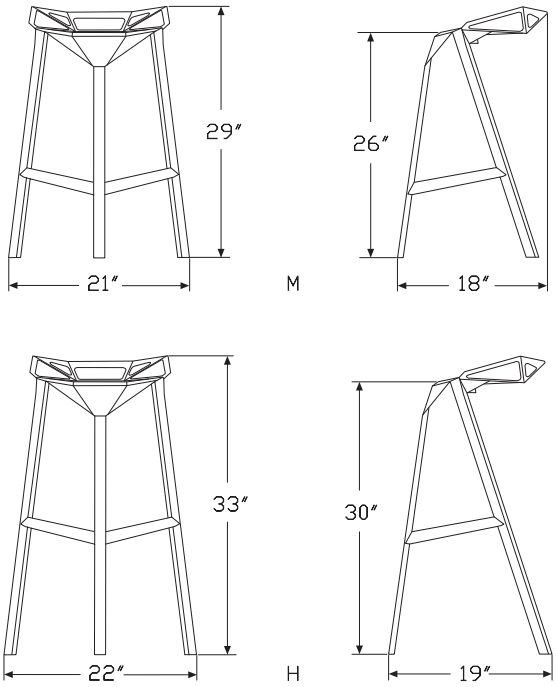

Specification Information

Step 1.

MGE30. A

Step 2. Height

M medium height A

H high height A

Step 3. Leg Material

AM aluminum A

AB anodised aluminum black A

Prices for Steps 1-3.

		AM	AB
MGE30.M		$908	958
	H	$968	1008

Step 4. Seat/Leg Finish

For aluminum (AM)

YHM	red A	+$0
YHP	white A	+$0

For anodised aluminum black (AB)

YHB	black A	+$0

Eames® Table Universal Base Round Outdoor

ET560
ET580

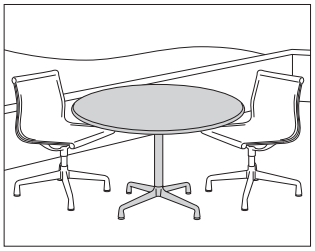

Product Information

Description

This outdoor table has a 3/4"-thick stone top. Each table has adjustable glides. Ships knocked down with assembly required. Top and base components ship in separate packages.

Notes

Stone top has a honed finish and full bullnose edge profile.

Natural characteristics in stone cause variations in hues, veins, crystals, and distinctive marks. These variations and subtle changes seen as the stone ages are values associated with natural materials. No two tabletops are identically the same; variations in both color and veining are to be expected. Over time the stone may fade in color, staining of the surface may appear, and surface cracks-if not already visible at time of purchase-may appear. Small cracks do not affect the structure of the tabletop.

Dimensions

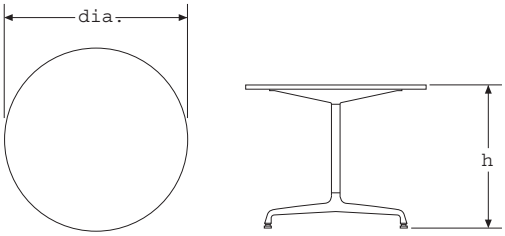

Specification Information

Step 1.

ET5 A

Step 2. Height

8	16" high	A
6	28 1/2" high	A

Step 3. Diameter

01	30" diameter	A
02	36" diameter	A

Step 4. Surface Material

S	stone top	A

Prices for Steps 1-4.

ET5801 S	$4122
ET5802 S	$4973
ET5601 S	$4122
ET5602 S	$4973

Step 5. Top Finish

			01	02
5U	georgia grey marble	A	+$436	526
HR	wisconsin black marble	A	+$1212	1462
DP	georgia white marble	A	+$1460	1761
FX	quebec graphite granite	A	+$1460	1761

Step 6. Column Finish

91	white	A	+$20
G2	graphite satin	A	+$20

Step 7. Base Finish

91	white	A	+$20
G2	graphite satin	A	+$20

Eames® Table Contract Base Round Outdoor

ET560
ET561
ET580
ET581

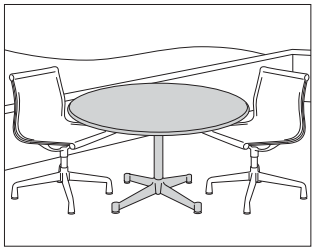

Product Information

Description

This outdoor table has a ¾"-thick stone top. Each table has adjustable glides. Ships knocked down with assembly required. Top and base components ship in separate packages.

Notes

Stone top has a honed finish and full bullnose edge profile.

Natural characteristics in stone cause variations in hues, veins, crystals, and distinctive marks. These variations and subtle changes seen as the stone ages are values associated with natural materials. No two tabletops are identically the same; variations in both color and veining are to be expected. Over time the stone may fade in color, staining of the surface may appear, and surface cracks-if not already visible at time of purchase-may appear. Small cracks do not affect the structure of the tabletop.

Dimensions

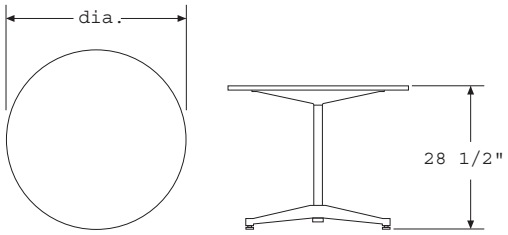

Specification Information

Step 1.

ET5 A

Step 2. Height

8 16" high A
6 28½" high A

Step 3. Diameter

07 30" diameter A
08 36" diameter A
09 42" diameter A
10 48" diameter A

Step 4. Surface Material

S stone top A

Prices for Steps 1-4.

ET5807 S	$4122
ET5808 S	$4973
ET5809 S	$7741
ET5810 S	$7999
ET5607 S	$4122
ET5608 S	$4973
ET5609 S	$7741
ET5610 S	$7999

Step 5. Top Finish

		07	08	09	10
5U	georgia grey marble A	+$436	526	610	711
HR	wisconsin black marble A	+$1212	1462	1590	1723
DP	georgia white marble A	+$1460	1761	2392	2836
FX	quebec graphite granite A	+$1460	1761	2392	2836

Step 6. Column Finish

91	white A	+$20
G2	graphite satin A	+$20

Step 7. Base Finish		
91	white A	+$20
G2	graphite satin A	+$20

Eames® Table Contract Base Square Outdoor

ET561

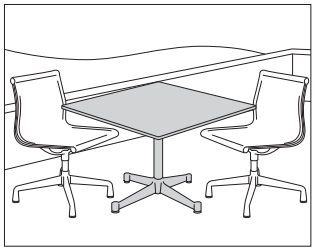

Product Information

Description

This 28½"-high outdoor table has a ¾"-thick stone top. Each table has adjustable glides. Ships knocked down with assembly required. Top and base components ship in separate packages.

Notes

Stone top has a honed finish and full bullnose edge profile.

Natural characteristics in stone cause variations in hues, veins, crystals, and distinctive marks. These variations and subtle changes seen as the stone ages are values associated with natural materials. No two tabletops are identically the same; variations in both color and veining are to be expected. Over time the stone may fade in color, staining of the surface may appear, and surface cracks-if not already visible at time of purchase-may appear. Small cracks do not affect the structure of the tabletop.

Dimensions

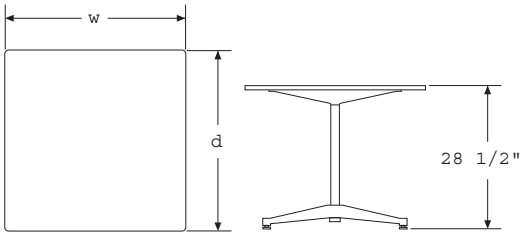

Specification Information

Step 1.

ET5 A

Step 2. Height

6	28½" high A	

Step 3. Depth/Width

12	30" deep X 30" wide A	
14	42" deep X 42" wide A	

Step 4. Surface Material

S	stone top A	

Prices for Steps 1-4.

ET5612 S	$4122
ET5614 S	$5824

Step 5. Top Finish

		12	**14**
5U	georgia grey marble A	+$436	610
HR	wisconsin black marble A	+$1212	1590
DP	georgia white marble A	+$1460	2392
FX	quebec graphite granite A	+$1460	2392

Step 6. Column Finish

91	white A	+$20
G2	graphite satin A	+$20

Step 7. Base Finish

91	white A	+$20
G2	graphite satin A	+$20

Air-Table Outdoor MGA71.

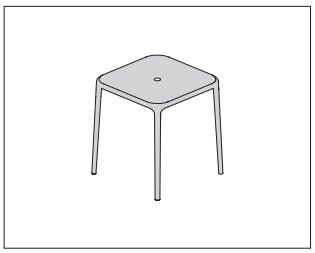

Product Information

Description

This outdoor stacking and knocked-down table is made from polypropylene with glass fibre added. It is available in a triangle or square shape. Tables can stack up to 5 high.

Dimensions

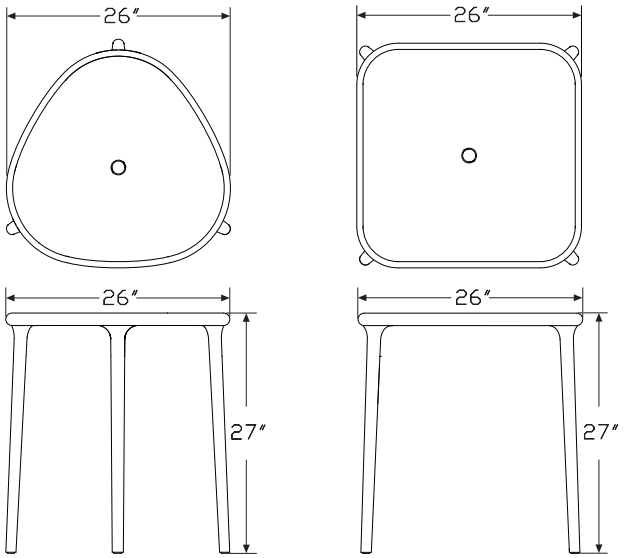

Specification Information

Step 1.

MGA71. A

Step 2. Shape

T	triangular A	
S	square A	

Prices for Steps 1-2.

MGA71.T		$344
	S	$395

Step 3. Finish

YBB	beige A	+$0
YBP	white A	+$0

Table_One Outdoor MGE71.

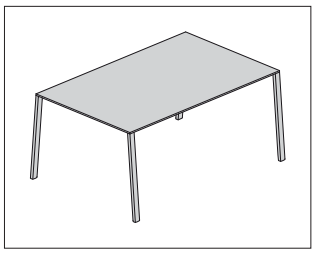

Product Information

Description

The frame of this outdoor table is an anodised aluminum tube. The top is a high pressure laminate. Joints are die-cast aluminum.

Notes

The frame and top finishes come in black only. No color options are available.

Dimensions

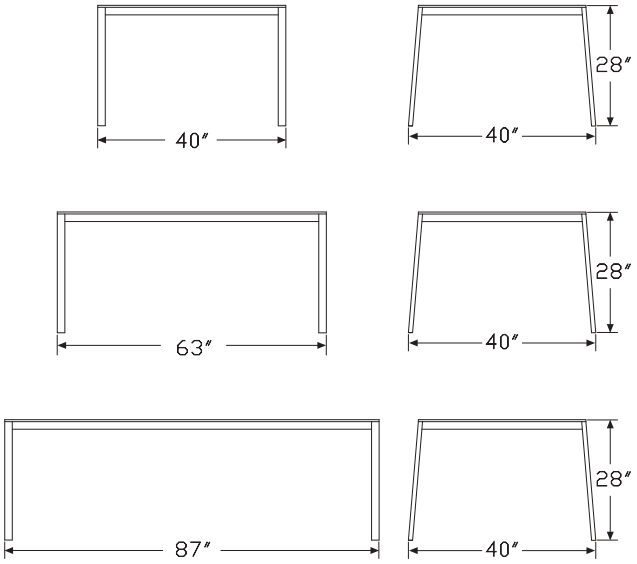

Specification Information

Step 1.

MGE71. A

Step 2. Size

4040	40″ x 40″	A
6340	63″ x 40″	A
8740	87″ x 40″	A

Prices for Steps 1-2.

MGE71.4040	$1733
6340	$2031
8740	$2636

Step 3. Base Finish

YHB	black A	+$0

Step 4. Top Finish

YHB	black A	+$0

Table_One Bistro Outdoor MGE81.

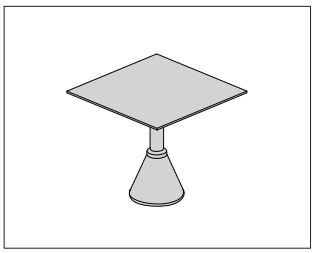

Product Information

Description

The shape of this outdoor table is available in round or square with a concrete base. The frame is an anodised aluminum tube. The top is high pressure laminate.

Notes

Finishes for the top and base come in black only. No color options are available.

Dimensions

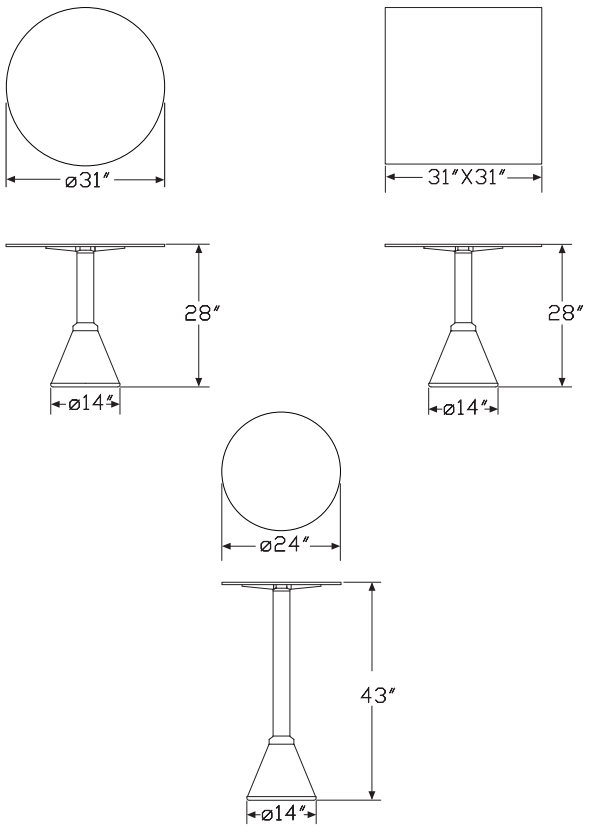

Specification Information

Step 1.

MGE81. A

Step 2. Shape

R round A
S square A

Step 3. Height

For round (R)

43 43″ high A
29 29″ high A

For square (S)

29 29″ high A

Prices for Steps 1-3.

		43	29
MGE81.R		$1076	1167
	S	—	$1122

Step 4. Base Finish

YHB black A +$0

Step 5. Top Finish

YHB black A +$0

Table First Outdoor MGF80.

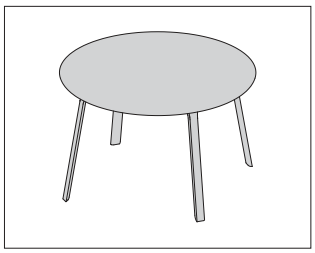

Product Information

Description

The shape of this outdoor table is available in round, square, or rectangular. The top of this table comes in medium-density fiberboard, painted or veneered, or high pressure laminate. The legs are made from polypropylene with glass fibre added.

Notes

With a medium-density fiberboard top, table thickness is 1 1/8″.

Dimensions

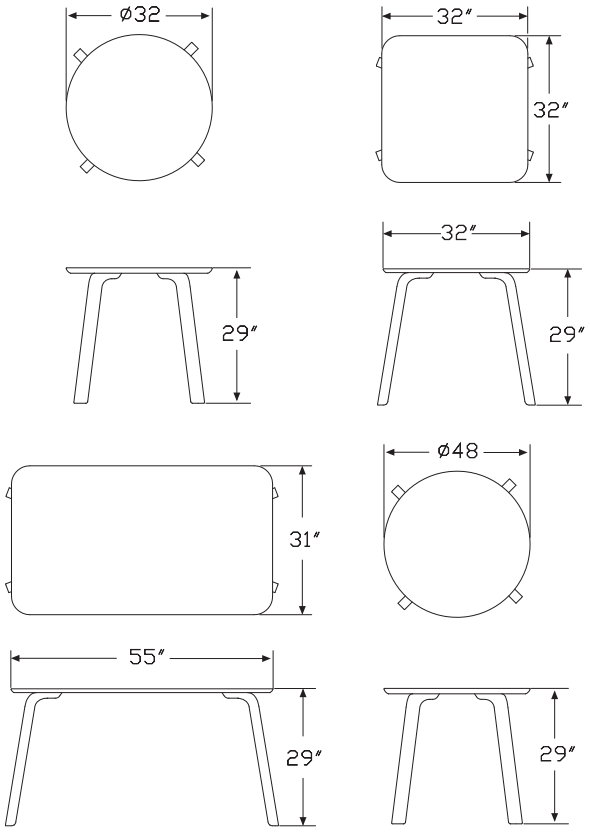

Specification Information

Step 1.

MGF80. A

Step 2. Size/Shape

3155	31″ x 55″ rectangular	A
3232	32″ x 32″ square	A
3200	32″ round	A
4800	48″ round	A

Prices for Steps 1-2.

MGF80.3155		$1191
3232		$1003
3200		$912
4800		$1510

Step 3. Leg Finish

YGC	black	A	+$0
YGM	white	A	+$0

Step 4. Top Finish

For black (YGC)

YGC	black	A	+$0

For white (YGM)

			3155	**3232**	**3200**	**4800**
YGN	white with black edge	A	+$0	0	0	0
YGM	white	A	+$198	224	381	579

Eames® Wire Base Low Table Outdoor LTRT.

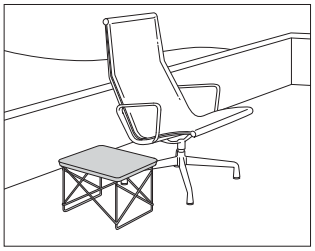

Product Information

Description

This outdoor table has a 3/4"-thick stone top. The base is either powder-coated or chrome wire.

Notes

Stone has a honed finish and knife edge profile.

Natural characteristics in stone cause variations in hues, veins, crystals, and distinctive marks. These variations and subtle changes seen as the stone ages are values associated with natural materials. No two tabletops are identically the same; variations in both color and veining are to be expected. Over time the stone may fade in color, staining of the surface may appear, and surface cracks-if not already visible at time of purchase-may appear. Small cracks do not affect the structure of the tabletop.

Dimensions

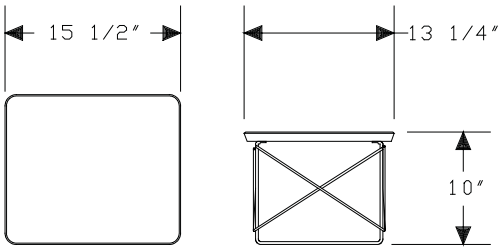

Specification Information

Step 1.

LTRT.5 A		$215

Step 2. Top Finish

5U	georgia grey marble A	+$1359
HR	wisconsin black marble A	+$1419
DP	georgia white marble A	+$1509
FX	quebec graphite granite A	+$1509

Step 3. Base Finish

91	white A	+$21
G2	graphite satin A	+$21

Nelson™ Pedestal Table Outdoor

5451.
5452.
5453.

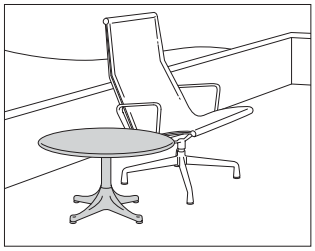

Product Information

Description

This outdoor table has a ¾"-thick stone top and adjustable glides.

Notes

Stone has a honed finish and knife edge profile.

Natural characteristics in stone cause variations in hues, veins, crystals, and distinctive marks. These variations and subtle changes seen as the stone ages are values associated with natural materials. No two tabletops are identically the same; variations in both color and veining are to be expected. Over time the stone may fade in color, staining of the surface may appear, and surface cracks-if not already visible at time of purchase-may appear. Small cracks do not affect the structure of the tabletop.

Dimensions

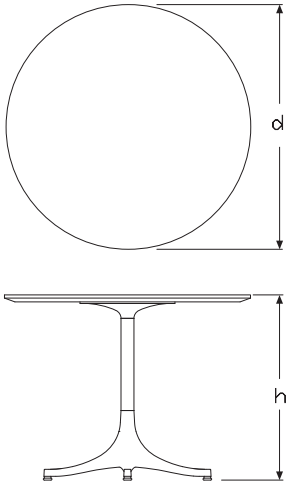

Specification Information

Step 1.

545 A

Step 2. Height/Diameter

1.5	21½" high x 17" diameter
3.5	21½" high x 28½" diameter
2.5	16" high x 28½" diameter

Prices for Steps 1-2.

5451.5	$2130
5453.5	$3399
5452.5	$3399

Step 3. Base Finish

91	white A	+$30
G2	graphite satin A	+$30

Step 4. Top Finish

		1.5	**3.5**	**2.5**
HR	wisconsin black marble A	+$631	1022	1022
5U	georgia grey marble A	+$225	360	360
DP	georgia white marble A	+$766	1220	1220
FX	quebec graphite granite A	+$766	1220	1220

Index by Product Name

Herman Miller Collection Accessories

Eames® Hang-It-All® page(s) 199
Eames® Molded Plywood Folding Screen 200

Herman Miller Collection Desks and Tables

Air-Table page(s) 148
Baguette Table 149
Branca Table 162
Burdick Group® 1/2-Round Work Surface 110
Burdick Group® Base Assembly 106
Burdick Group® Beam 105
Burdick Group® Cable Management Accessory Package 107
Burdick Group® Rectangular Work Surface 109
Burdick Group® Round Work Surface 108
Central Table 150
Claw Occasional Table, Square 170
Claw Table 169
Deja-Vu Console 151
Deja-Vu Extending Table 152
Deja-Vu Table 153
Eames® Desk Unit 103
Eames® Molded Plywood Coffee Table Wood Base 163
Eames® Round Table, Contract Base 124
Eames® Round Table, Universal Base 114
Eames® Square Table, Contract Base 129
Eames® Square Table, Universal Base 119
Eames® Table Contract Base Round 121
Eames® Table Contract Base Square 126
Eames® Table Segmented Base Oval 135
Eames® Table Segmented Base Rectangular 140
Eames® Table Segmented Base Round 131
Eames® Table Universal Base Round 111
Eames® Table Universal Base Square 116
Eames® Wire Base Elliptical Table 164
Eames® Wire Base Low Table 165
Full Round Table 171
H-Frame Coffee Table 175
H-Frame Side Table 173
I-Beam Coffee Table 177
I-Beam Side Table 178
Nelson™ Pedestal Table 166
Nelson™ Swag Leg Desk 104
Nelson™ Swag Leg Dining Table Rectangular 144
Nelson™ Swag Leg Dining Table Round 145
Nelson™ Swag Leg Work Table 146
Nelson™ X-Leg Table 147
Noguchi® Table 168
She Said Table 161
Steelwood Extending Table 156
Steelwood Table 154
Steelwood Table System 155
Table First 157
Table_One 158
Table_One Bistro 159
Tavolo XZ3 Table 160

Herman Miller Collection Outdoor Furniture

Air-Chair Outdoor page(s) 204
Air-Table Outdoor 224
Chair First Outdoor 208
Chair_ One Outdoor 205
Chair_ One Stacking Outdoor 206
Deja-Vu Chair Outdoor 209
Eames® Aluminum Group Lounge Chair Outdoor 211
Eames® Aluminum Group Ottoman Outdoor 212
Eames® Aluminum Group Side Chair Outdoor 203
Eames® Table Contract Base Round Outdoor 221
Eames® Table Contract Base Square Outdoor 223
Eames® Table Universal Base Round Outdoor 220
Eames® Wire Base Low Table Outdoor 228
Folding Air-Chair Outdoor 207
Nelson™ Pedestal Table Outdoor 229
Paso Doble Chair Outdoor 210
Paso Doble Chaise Lounge Outdoor 213
Paso Doble Low Chair High Back Outdoor 215
Paso Doble Low Chair Outdoor 214
Paso Doble Ottoman, Outdoor 217
Paso Doble Stool Outdoor 218
Spun Rotating Chair 216
Stool_One Outdoor 219
Table First Outdoor 227
Table_One Bistro Outdoor 226
Table_One Outdoor 225

Herman Miller Collection Seating

Air-Chair page(s) 15
Air-Chair to Air-Chair Connector 16
Air-Folding Chair 17
Al Bombo Kit 67
Al Bombo Stool 66
Bombo Special Stool 69
Bombo Stool 68
Branca Chair 27
Capelli Stool 63
Chair First 18

Chair_ One 4-Star Base 20
Chair_ One Stacking Base 19
Chair_One Cushion 21
Deja-Vu Chair 22
Deja-Vu Stool 70
Eames® Aluminum Group Executive Chair 79
Eames® Aluminum Group Lounge Chair 35
Eames® Aluminum Group Management Chair 81
Eames® Aluminum Group Ottoman 37
Eames® Aluminum Group Side Chair 5
Eames® Chaise 49
Eames® Executive Chair 87
Eames® Lounge Chair 42
Eames® Lounge Chair and Ottoman 40
Eames® Lounge Chair and Ottoman White Ash 41
Eames® Lounge Chair White Ash 43
Eames® Molded Plastic Armchair 13
Eames® Molded Plastic Armchair Rocker Base 46
Eames® Molded Plastic Side Chair 9
Eames® Molded Plywood Dining Chair Metal Base 7
Eames® Molded Plywood Dining Chair Wood Base 8
Eames® Molded Plywood Lounge Chair Metal Base 47
Eames® Molded Plywood Lounge Chair Wood Base 48
Eames® Ottoman 44
Eames® Ottoman White Ash 45
Eames® Side Chair Stacking Base Dolly 11
Eames® Sofa 89
Eames® Sofa Compact 88
Eames® Soft Pad Group Executive Chair 83
Eames® Soft Pad Group Management Chair 85
Eames® Soft Pad Lounge Chair 38
Eames® Soft Pad Ottoman 39
Eames® Soft Pad Side Chair 6
Eames® Walnut Stool 64
Eames® Wire Chair 12
Envelope Chair 32
Full Twist Guest Chair 33
Goetz™ Sofa 90
He Said Chair 28
Lyra Stool 71
Nelson™ Coconut Lounge Chair 50
Nelson™ Marshmallow Sofa 92
Nelson™ Pedestal Stool 65
Nelson™ Platform Bench 75
Nelson™ Platform Bench Cushion 76
Nelson™ Swag Leg Armchair 14
Osso Chair 26
Paso Doble Chair 23
Paso Doble Chaise 51
Paso Doble Lounge Chair 52
Paso Doble Lounge Chair High Back 53
Paso Doble Ottoman 54
Paso Doble Stool 72
Scissor Chair 56
She Said Chair 30
Sled Chair 58
Spun Rotating Chair 55
Steelwood Chair 24
Steelwood Stool 73
Stool_One 74
Troy Chair 25
Tuxedo Bench 77
Tuxedo Club Chair 59
Tuxedo Corner Sofa with Attached Settee 97
Tuxedo Corner Sofa with Attached Sofa 99
Tuxedo Daybed 62
Tuxedo Museum Bench 78
Tuxedo Ottoman 61
Tuxedo Settee 95
Tuxedo Sofa 93

Herman Miller Collection Storage

Eames® Storage Unit page(s) 181
Nelson™ Basic Cabinet Series 16.5 x 18 183
Nelson™ Basic Cabinet Series 24 x 24 184
Nelson™ Basic Cabinet Series 24 x 34 185
Nelson™ Basic Cabinet Series 24 x 34 Bookcase 186
Nelson™ Basic Cabinet Series 34 x 40 187
Nelson™ Miniature Chest 6 Drawer 191
Nelson™ Miniature Chest 6 Drawer Pedestal Base 192
Nelson™ Miniature Chest 9 Drawer 193
Nelson™ Miniature Chest 9 Drawer Pedestal Base 194
Nelson™ Thin Edge Buffet 188
Nelson™ Thin Edge Cabinet 189
Nelson™ Thin Edge Chest 190
Steelwood Shelving System 195

Index by Product Number

411	Eames® Walnut Stool	page(s) 64
412		
413		
473	Eames® Sofa Compact	88
5451.	Nelson™ Pedestal Table Outdoor	229
5451L	Nelson™ Pedestal Table	166
5451S		
5451W		
5452.	Nelson™ Pedestal Table Outdoor	229
5452L	Nelson™ Pedestal Table	166
5452S		
5452W		
5453.	Nelson™ Pedestal Table Outdoor	229
5453L	Nelson™ Pedestal Table	166
5453S		
5453W		
5569.	Nelson™ Coconut Lounge Chair	50
5670	Nelson™ Marshmallow Sofa	92
ACL1A	Claw Table	169
ACL2A	Claw Occasional Table, Square	170
AWB1Z	I-Beam Side Table	178
AWB2G	I-Beam Coffee Table	177
AWB2M		
AWH2G	H-Frame Coffee Table	175
AWH2G	H-Frame Side Table	173
AWH2S	H-Frame Coffee Table	175
AWH2S	H-Frame Side Table	173
AWH2W	H-Frame Coffee Table	175
AWH2W	H-Frame Side Table	173
AWR2-	Full Round Table	171
BC1618	Nelson™ Basic Cabinet Series 16.5 x 18	183
BC2400	Nelson™ Basic Cabinet Series 24 x 34 Bookcase	186
BC2424	Nelson™ Basic Cabinet Series 24 x 24	184
BC2434	Nelson™ Basic Cabinet Series 24 x 34	185
BC3440	Nelson™ Basic Cabinet Series 34 x 40	187
BG101	Burdick Group® Beam	105
BG102		
BG103	Burdick Group® Base Assembly	106
BG105	Burdick Group® Beam	105
BG106		
BG107	Burdick Group® Base Assembly	106
BG115	Burdick Group® Rectangular Work Surface	109
BG116		
BG117	Burdick Group® Round Work Surface	108
BG118	Burdick Group® 1/2-Round Work Surface	110
BG120	Burdick Group® Rectangular Work Surface	109
BG121		
BG122	Burdick Group® Round Work Surface	108
BG123	Burdick Group® 1/2-Round Work Surface	110
BG127		
BG210	Burdick Group® Cable Management Accessory Package	107
CTW.	Eames® Molded Plywood Coffee Table Wood Base	163
DAF	Nelson™ Swag Leg Armchair	14
DAR.	Eames® Molded Plastic Armchair	13
DAW.		
DAX.		
DCM.	Eames® Molded Plywood Dining Chair Metal Base	7
DCW.	Eames® Molded Plywood Dining Chair Wood Base	8
DKR.	Eames® Wire Chair	12
DOLLY.	Eames® Side Chair Stacking Base Dolly	11
DSR.	Eames® Molded Plastic Side Chair	9
DSS.		
DSW.		
DSX.		
EA306	Eames® Aluminum Group Side Chair	5
EA308		
EA316	Eames® Aluminum Group Lounge Chair	35
EA322		
EA323	Eames® Aluminum Group Ottoman	37
EA334	Eames® Aluminum Group Management Chair	81
EA335		
EA337	Eames® Aluminum Group Executive Chair	79
EA406	Eames® Soft Pad Side Chair	6
EA408		
EA416	Eames® Soft Pad Lounge Chair	38
EA422		
EA423	Eames® Soft Pad Ottoman	39
EA434	Eames® Soft Pad Group Management Chair	85
EA435		
EA437	Eames® Soft Pad Group Executive Chair	83
EA506	Eames® Aluminum Group Side Chair Outdoor	203
EA508		
EA516	Eames® Aluminum Group Lounge Chair Outdoor	211
EA523	Eames® Aluminum Group Ottoman Outdoor	212
EDU10.	Eames® Desk Unit	103
EDU20.		
EDU21.		
ES106	Eames® Chaise	49
ES108	Eames® Sofa	89
ES110		
ES204	Eames® Executive Chair	87

ES670	Eames® Lounge Chair	42
ES670	Eames® Lounge Chair and Ottoman	40
ES670	Eames® Lounge Chair and Ottoman White Ash	41
ES670	Eames® Lounge Chair White Ash	43
ES671	Eames® Ottoman	44
ES671	Eames® Ottoman White Ash	45
ESU100	Eames® Storage Unit	181
ESU150		
ESU201		
ESU230		
ESU420		
ET101	Eames® Table Universal Base Round	111
ET102		
ET104	Eames® Table Universal Base Square	116
ET105		
ET107	Eames® Table Contract Base Round	121
ET108		
ET112	Eames® Table Contract Base Square	126
ET113		
ET122	Eames® Table Segmented Base Round	131
ET123		
ET124		
ET127		
ET129		
ET131		
ET142	Eames® Table Segmented Base Rectangular	140
ET143		
ET144		
ET145		
ET147		
ET149	Eames® Table Segmented Base Oval	135
ET150		
ET151		
ET152		
ET153		
ET155		
ET156		
ET157		
ET158		
ET160		
ET161		
ET162		
ET164		
ET166		
ET168		
ET170		
ET187	Eames® Table Segmented Base Rectangular	140
ET188		
ET189		
ET301	Eames® Table Universal Base Round	111
ET302		
ET307	Eames® Table Contract Base Round	121
ET308		
ET560	Eames® Table Contract Base Round Outdoor	221
ET560	Eames® Table Universal Base Round Outdoor	220
ET561	Eames® Table Contract Base Round Outdoor	221
ET561	Eames® Table Contract Base Square Outdoor	223
ET580	Eames® Table Contract Base Round Outdoor	221
ET580	Eames® Table Universal Base Round Outdoor	220
ET581	Eames® Table Contract Base Round Outdoor	221
ET601	Eames® Round Table, Universal Base	114
ET602		
ET604	Eames® Square Table, Universal Base	119
ET607	Eames® Round Table, Contract Base	124
ET608		
ET609		
ET610		
ET612	Eames® Square Table, Contract Base	129
ET614		
ET801	Eames® Round Table, Universal Base	114
ET802		
ET807	Eames® Round Table, Contract Base	124
ET808		
ET809		
ET810		
ETRT.	Eames® Wire Base Elliptical Table	164
FSW.	Eames® Molded Plywood Folding Screen	200
GS100.	Goetz™ Sofa	90
HIA	Eames® Hang-It-All®	199
IN50	Noguchi® Table	168
KC100.	Capelli Stool	63
LCM.	Eames® Molded Plywood Lounge Chair Metal Base	47
LCW.	Eames® Molded Plywood Lounge Chair Wood Base	48
LTRT.	Eames® Wire Base Low Table	165
LTRT.	Eames® Wire Base Low Table Outdoor	228
MGA00.	Air-Chair	15
MGA01.	Air-Folding Chair	17
MGA10.	Air-Chair Outdoor	204
MGA11.	Folding Air-Chair Outdoor	207
MGA70.	Air-Table	148
MGA71.	Air-Table Outdoor	224
MGA90.	Air-Chair to Air-Chair Connector	16

MGB20.	Al Bombo Stool	66
MGB21.	Bombo Stool	68
MGB22.	Bombo Special Stool	69
MGB90.	Al Bombo Kit	67
MGD00.	Deja-Vu Chair	22
MGD10.	Deja-Vu Chair Outdoor	209
MGD20.	Deja-Vu Stool	70
MGD70.	Deja-Vu Table	153
MGD71.	Deja-Vu Extending Table	152
MGD72.	Deja-Vu Console	151
MGE00.	Chair_ One 4-Star Base	20
MGE00.	Chair_ One Stacking Base	19
MGE10.	Chair_ One Outdoor	205
MGE10.	Chair_ One Stacking Outdoor	206
MGE20.	Stool_One	74
MGE30.	Stool_One Outdoor	219
MGE70.	Table_One	158
MGE71.	Table_One Outdoor	225
MGE80.	Table_One Bistro	159
MGE81.	Table_One Bistro Outdoor	226
MGE90.	Chair_One Cushion	21
MGF00.	Chair First	18
MGF01.	Chair First Outdoor	208
MGF70.	Table First	157
MGF80.	Table First Outdoor	227
MGG70.	Baguette Table	149
MGG80.	Central Table	150
MGH00.	He Said Chair	28
MGH01.	She Said Chair	30
MGH70.	She Said Table	161
MGJ00.	Osso Chair	26
MGL20.	Lyra Stool	71
MGN00.	Spun Rotating Chair	55, 216
MGP00.	Paso Doble Chair	23
MGP01.	Paso Doble Lounge Chair	52
MGP02.	Paso Doble Lounge Chair High Back	53
MGP03.	Paso Doble Ottoman	54
MGP10.	Paso Doble Chair Outdoor	210
MGP11.	Paso Doble Low Chair Outdoor	214
MGP12.	Paso Doble Low Chair High Back Outdoor	215
MGP13.	Paso Doble Ottoman, Outdoor	217
MGP20.	Paso Doble Stool	72
MGP30.	Paso Doble Stool Outdoor	218
MGP40.	Paso Doble Chaise	51
MGP50.	Paso Doble Chaise Lounge Outdoor	213
MGR00.	Branca Chair	27
MGR70.	Branca Table	162
MGS00.	Steelwood Chair	24
MGS20.	Steelwood Stool	73
MGS70.	Steelwood Table	154
MGS71.	Steelwood Extending Table	156
MGS72.	Steelwood Table System	155
MGS90.	Steelwood Shelving System	195
MGT70.	Tavolo XZ3 Table	160
MGY00.	Troy Chair	25
NC521	Nelson™ Miniature Chest 6 Drawer	191
NC521	Nelson™ Miniature Chest 9 Drawer	193
NC551	Nelson™ Miniature Chest 6 Drawer Pedestal Base	192
NC551	Nelson™ Miniature Chest 9 Drawer Pedestal Base	194
NS585	Nelson™ Swag Leg Desk	104
NS585	Nelson™ Swag Leg Dining Table Rectangular	144
NS585	Nelson™ Swag Leg Dining Table Round	145
NS585	Nelson™ Swag Leg Work Table	146
NX100.	Nelson™ X-Leg Table	147
PB.	Nelson™ Platform Bench	75
PBC.	Nelson™ Platform Bench Cushion	76
PS16	Nelson™ Pedestal Stool	65
RAR.	Eames® Molded Plastic Armchair Rocker Base	46
SBEV-	Envelope Chair	32
SBSC- SBSD-	Scissor Chair	56
SBSU-	Sled Chair	58
SFT1M SFT1N SFT1W	Full Twist Guest Chair	33
ST1AN ST1AQ	Tuxedo Club Chair	59
ST1BN ST1BQ	Tuxedo Ottoman	61
ST1NN ST1NQ	Tuxedo Club Chair	59
ST2AN ST2AQ	Tuxedo Settee	95
ST2BN ST2BQ	Tuxedo Bench	77
ST2MN ST2MQ	Tuxedo Corner Sofa with Attached Settee	97
ST2NN ST2NQ	Tuxedo Settee	95
ST3AN ST3AQ	Tuxedo Sofa	93

ST3BN	Tuxedo Museum Bench	78
ST3BQ		
ST3DN	Tuxedo Daybed	62
ST3DQ		
ST3MN	Tuxedo Corner Sofa with Attached Sofa	99
ST3MQ		
ST3NN	Tuxedo Sofa	93
ST3NQ		
TE2100	Nelson™ Thin Edge Chest	190
TE2134	Nelson™ Thin Edge Cabinet	189
TE2167	Nelson™ Thin Edge Buffet	188

For more information about our products and services or to see a list of dealers, please visit us at HermanMiller.com or call (800) 851 1196.

This book is recyclable. Printed in U.S.A. on recycled paper.

© 2012 Herman Miller, Inc., Zeeland, Michigan

® HermanMiller, ☻, Abak, AO, Action Office, Aeron, Ambi, Ardea, Aside, Avall, Avive, Babble, C2, Caper, Celle, Co/Struc, Daisyone, DOT, Eames, Embody, Envelop, Equa 2, Ergon 3, Ethospace, Fine-Tune, FlexFront, FLO, Formcoat, Ground Cloth, Herman Miller Healthcare, Herman Miller Options, Intersect, Kinemat, Lapjack, Leaf, Lifework, Limerick, Meridian, Mirra, Passage, Pellicle, Perspectives, PostureFit, Prospects, Quadrant, Resolve, Rodney, RoomTune, SAYL, Scooter, Setu, Stoa, Teneo, Tu, Vary Easy, Wishbone, and Z-Axis are among the registered trademarks of Herman Miller, Inc., and its owned subsidiaries.

™ 3D Intelligent, About Face, Advo, AireWeave, Airia, ArcSpan, Arrio, Backfit, Boomerang, Bubbletack, Burdick Group, Canvas Office Landscape, Celeste, Cellular Suspension, Clam, CLT, CoActive, Cognita, Compass, Cygnus, Durawrap, Eco-Dematerialised, Enchord, EnhancedAccess, Everywhere, E-Wall, Flex-Edge, Flute, Harmonic, Herman Miller for the Home, Herman Miller International Collection, Herman Miller Select, Hopsak 2, Iota, JAW, Keyless Entry, Latitude, Live Unframed, LOOP, Lyris, Lyris 2, Multiscrim, My Studio Environments, Nala, Nelson, Pixelated Support, Programmable Environments, Q, Rapunzel, Recline Selector, Sense, Stackable, Stackable Storage, Swoop, TaskPointe, The Be Collection, Thinking is good for you, Thrive, TriFlex, Twist, V-Wall, and Y-Tower are among the trademarks of Herman Miller, Inc., and its owned subsidiaries.

SM S3, TAP, Textile Alliance Program, and Thoughtpile are among the service marks of Herman Miller, Inc.

Chemsurf® is a registered trademark of Wilsonart International.

Corian® is a registered trademark of DuPont.

DACRON® is a registered trademark of INVISTA S.a r.l.

FLEXNET™ is a trademark of Milliken & Company.

Floor Saver Glide® is a registered trademark of Carpin Manufacturing, Inc.

Geiger® is a registered trademark of Geiger International.

Goetz™ is a trademark of Mark W. Goetz.

Hang-It-All® is a registered trademark of Lucia Eames Demetrios, d.b.a. Eames Office.

Holophane® is a registered trademark of Holophane.

Ingeo™ is a trademark of Cargill Dow LLC.

iPad® is a registered trademark of Apple, Inc.

LifeSize® is a registered trademark of LifeSize Communications, Inc.

Microsoft® and Natural® Keyboard are registered trademarks of Microsoft Corporation.

MOTOROLA XOOM™ is a trademark of Motorola Trademark Holdings, LLC.

Noguchi® is a registered trademark of The Isamu Noguchi Foundation and Garden Museum.

Qt Quiet technology™ and Qt™ are trademarks of Cambridge Sound Management, Inc.