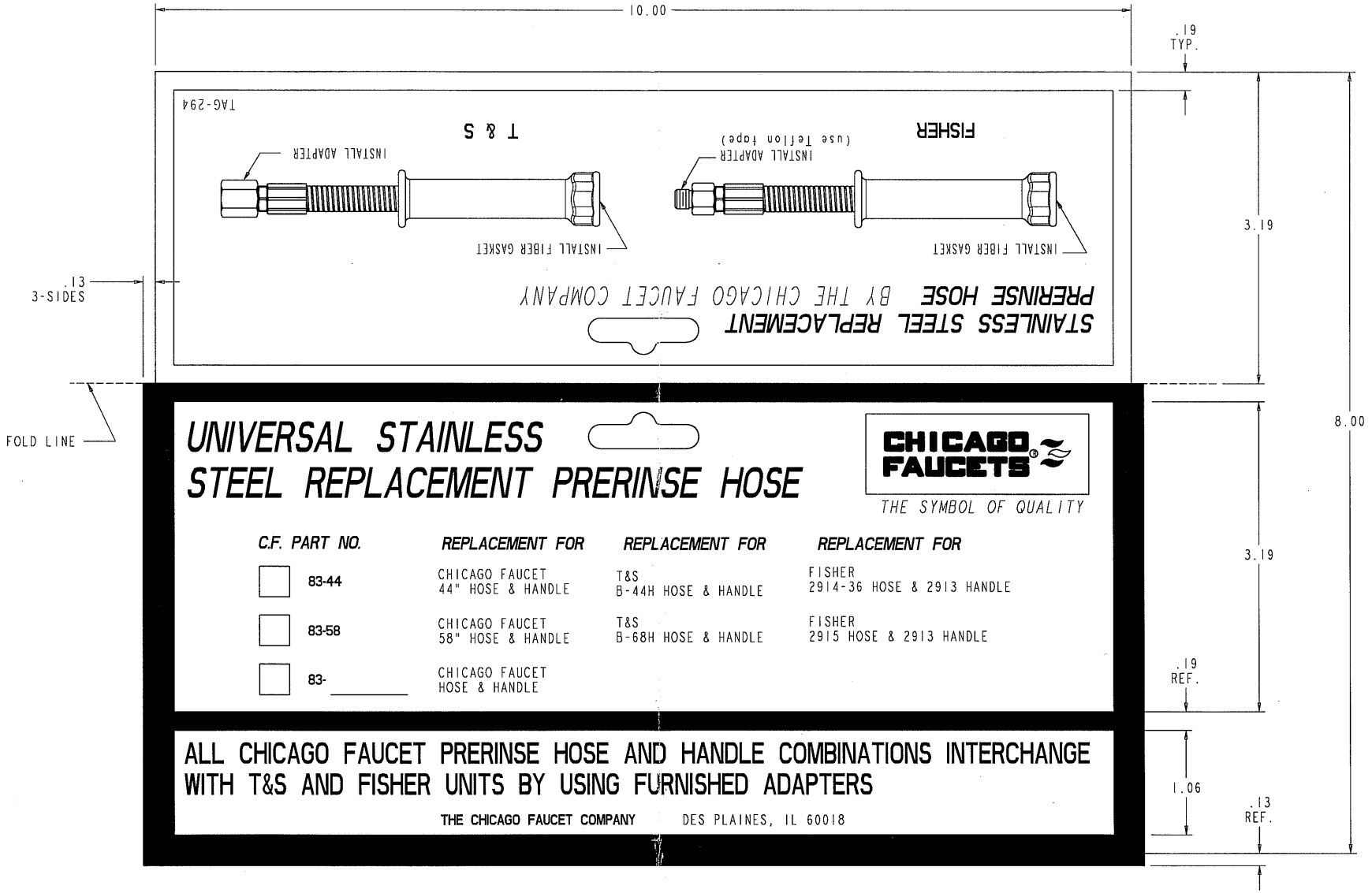
10.00
.19
TYP.
3.19
8.00
3.19
.19
REF.
1.06
.13
REF.
.13
3-SIDES
FOLD LINE
TAG-294
T & S
INSTALL ADAPTER
INSTALL FIBER GASKET
FISHER
(use Teflon tape)
INSTALL ADAPTER
INSTALL FIBER GASKET
STAINLESS STEEL REPLACEMENT
PRERINSE HOSE BY THE CHICAGO FAUCET COMPANY
UNIVERSAL STAINLESS
STEEL REPLACEMENT PRERINSE HOSE
CHICAGO FAUCETS
THE SYMBOL OF QUALITY
C.F. PART NO.
REPLACEMENT FOR
REPLACEMENT FOR
REPLACEMENT FOR
83-44
CHICAGO FAUCET 44" HOSE & HANDLE
T&S B-44H HOSE & HANDLE
FISHER 2914-36 HOSE & 2913 HANDLE
83-58
CHICAGO FAUCET 58" HOSE & HANDLE
T&S B-68H HOSE & HANDLE
FISHER 2915 HOSE & 2913 HANDLE
83-
CHICAGO FAUCET HOSE & HANDLE
ALL CHICAGO FAUCET PRERINSE HOSE AND HANDLE COMBINATIONS INTERCHANGE WITH T&S AND FISHER UNITS BY USING FURNISHED ADAPTERS
THE CHICAGO FAUCET COMPANY
DES PLAINES, IL 60018