AL Tube Pro (DMX-512)

ACCLAIM LIGHTING

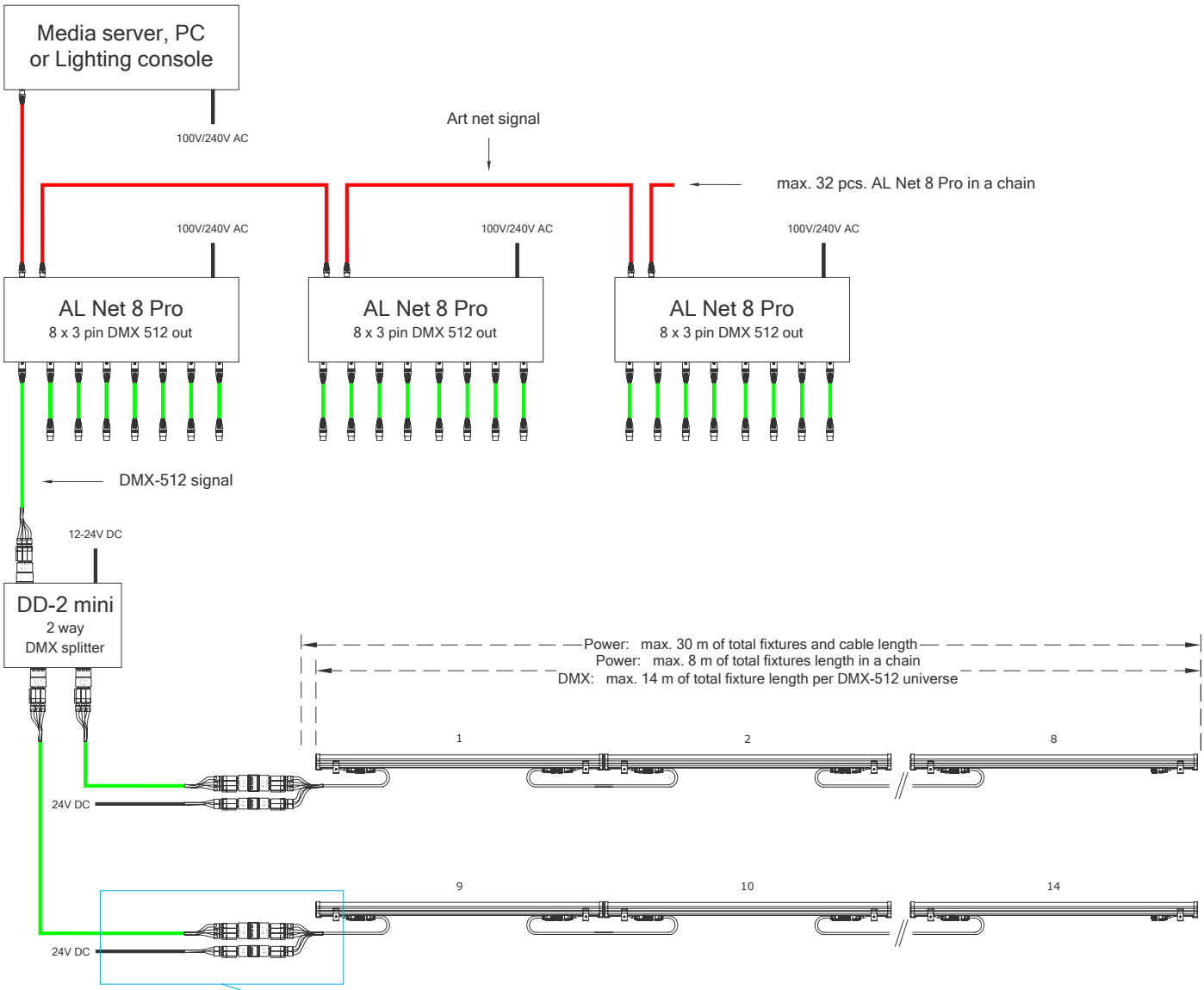

Details

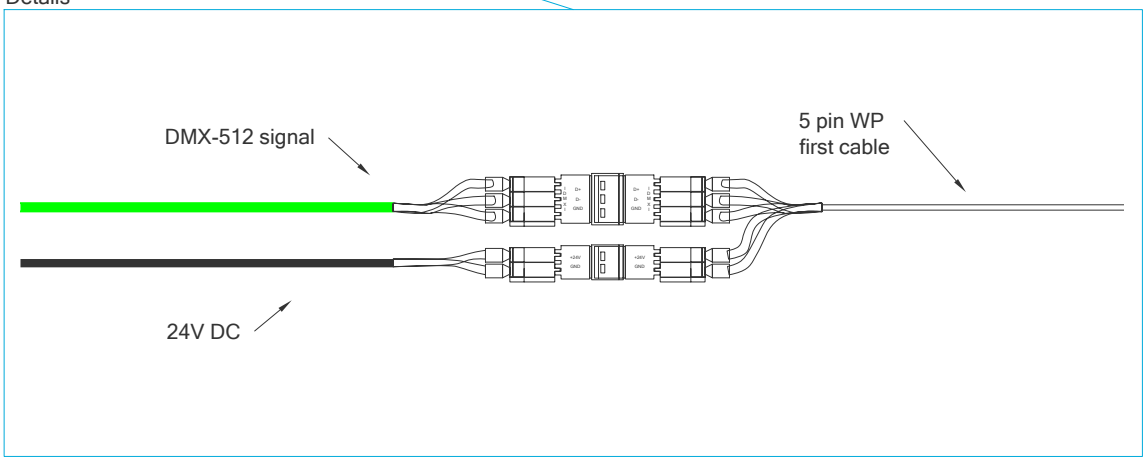

** All rights reserved. Improvements changes to specifications, design, and all contents in this catalog may be made at any time without prior notice.

AL Tube Pro (DMX-512 / X-PD-150-II)

ACCLAIM LIGHTING

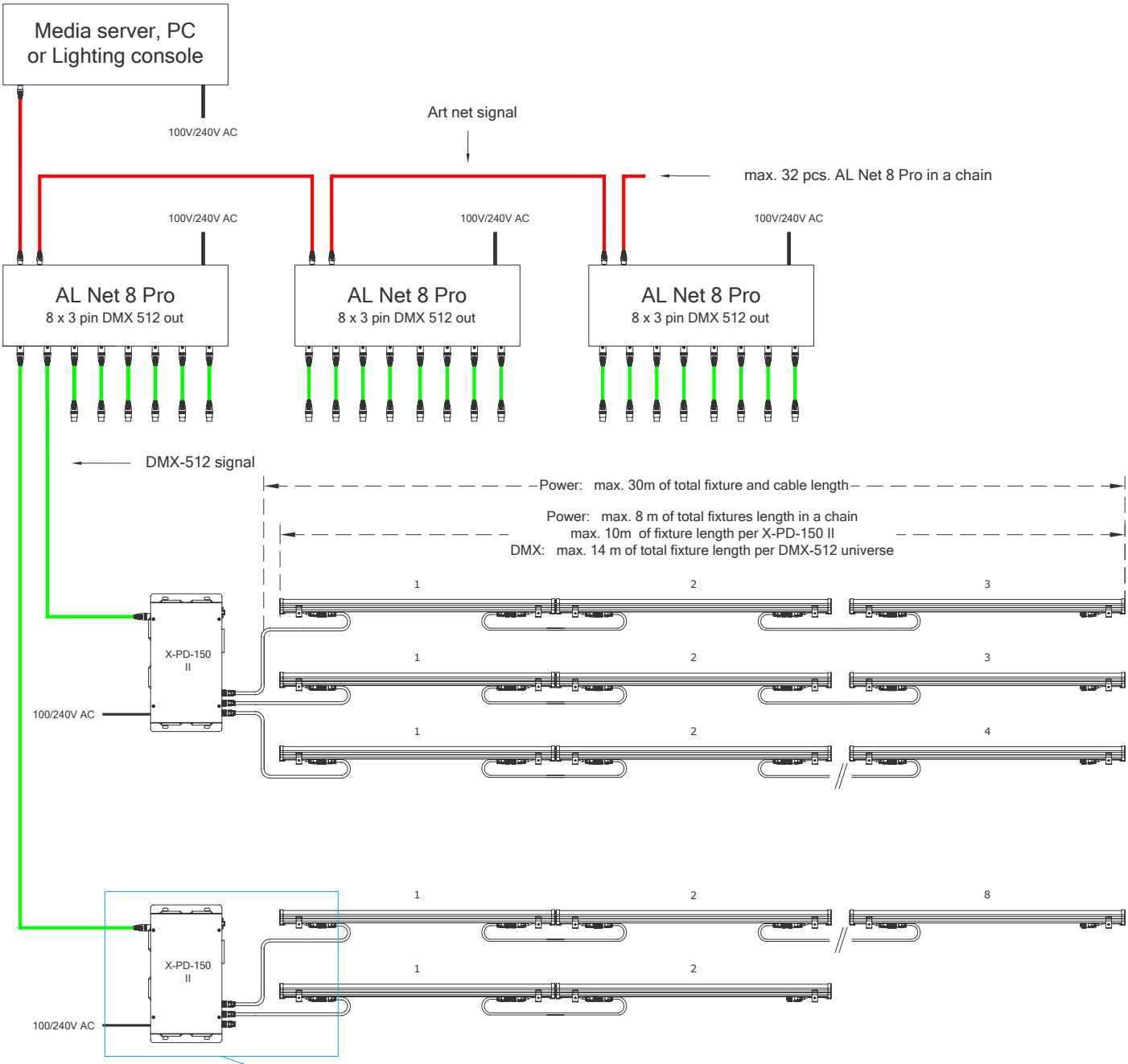

Details

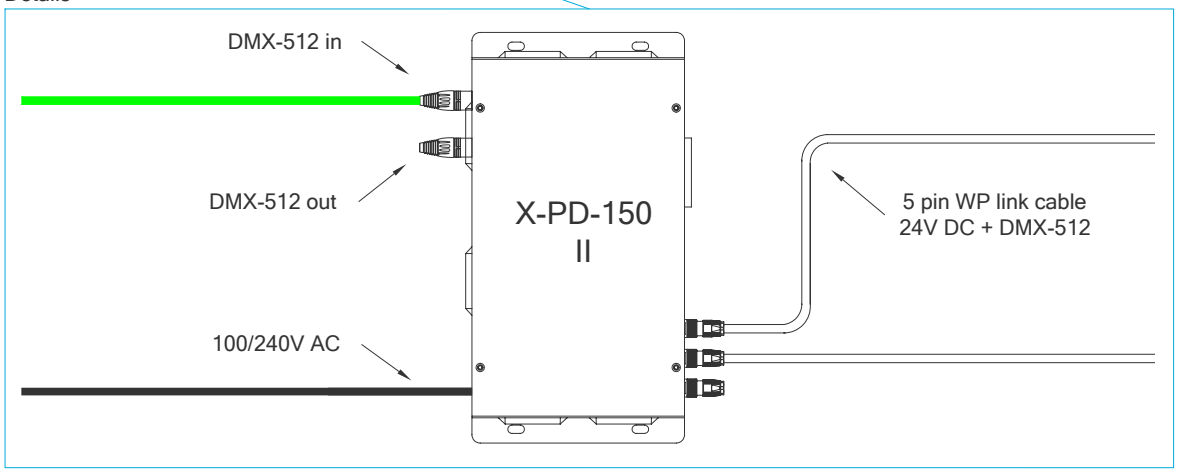

** All rights reserved. Improvements changes to specifications, design, and all contents in this catalog may be made at any time without prior notice.