IRiS

CATALOG#: TYPE:

DESCRIPTION

Specification grade 71 watt MR16 downlight pinhole fixture. The 50° cutoff to lamp and lamp image provides a glare free, smooth distribution of light. For use with all halogen MR16 lamps in either open or cover glass varieties. Units small size is ideal for tight construction areas. Insulation must be kept 3" away from sides and top of fixture. **Optical element can be changed after installation to provide a variety of distributions. e.g. into an Adjustable**

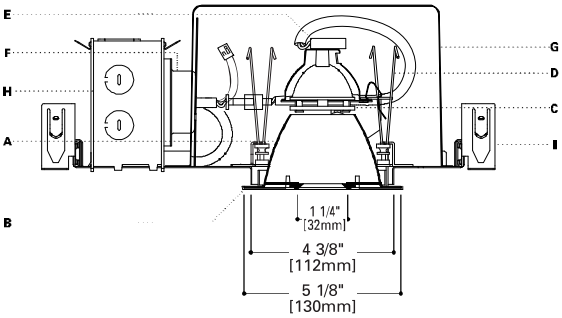

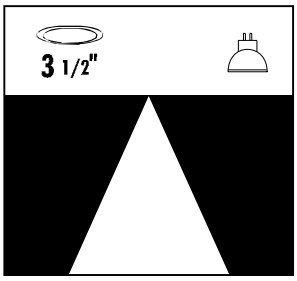

PN3MR E3DNPIN

71W MR16

3" DOWNLIGHT PINHOLE

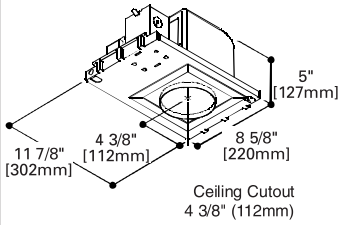

SPECIFICATION FEATURES

A···Finish
.040 thick aluminum spun parabolic interior reflector in Black Alzak® finish. Die-cast 1.25" occulus with knife edge produces dark aperture. Occulus with either flat black or white finish. No occulus in "LARGE version".

B···Flange
Die-cast flange with matte white, clear coat, satin aluminum or polished aluminum finish. Die-cast flanges are easily removed for field painting. Elements are keyed for proper insertion.

C···Lens
Soft focus lens standard in platform for smooth beam patterns. Pinhole element includes a clear lens to allow maximum output if desired. Up to two filter media can be used which are retained during relamping.

D···Attachment
Positive torsion springs pull flange tight to ceiling. Mechanical light trap eliminates spill light at edge of flange or reflector.

E···Socket
GX5.3 base for Bi-pin MR16 lamps. Fixed socket height ensures consistent lamp position and back light shield keeps interior of fixture dark.

F···Transformer
Truvolt™ toroidal transformer with dual-output taps for proper 12.0V operation and quiet operation when dimmed. Dimmer tap compensates for inherent voltage loss from dimmers, resulting in 30% more lumens than traditional laminated transformers. Toroidal design, with 90% or greater efficiency, features a rolled one-piece continuous core of M3 grade grain oriented silicon steel complete with an integral thermal to protect against overheating. For dimming, use dimmers rated for electromagnetic transformers.

Transformer is warranted for 5 years and is serviceable from below ceiling.

Note: If a dimming system is operated for construction lighting in its "shunt" mode, i.e. bypassing the dimmer modules, for an extended period of time, fixtures with the dual-tap toroidal transformer should be operated on the "Switched Fixture" output until the dimmers are in use. Operating fixtures on the "Dimmed Fixture" output with a full 120v input for an extended period will overdrive the lamp and cause shortened lamp life.

G···Frame/Housing
Hot dipped galvanized 20 gauge steel frame with built in 1/2 inch plaster lip. Gunsights allow for consistent alignment. Matte black housing interior.

H···Junction Box
18 cubic inches, listed for 4#12 AWG or 6#14 AWG 90 C additional feed through conductors, has three 1/2 inch pryouts.

I···Bar Hangers
No Flex® bar hangers with positive locking, for use with wood, engineered wood and steel frame joists spaced up to 24" O.C. ship with platform. For use in T-bar ceilings order accessory MBCLP clips. Nailess barb and locator lip provide consistent installation height.

Codes
Thermally protected, IP labeled . Unit is airtight and exchanges less than 2.0 CFM with the plenum at a pressure of 75 pascals. Insulation must be kept three inches away from fixture sides and none on top as to entrap heat.

Labels
UL and cUL listed, standard damp label, IBEW union made.

Energy Data

120V Input

Lamp Watts	Input Watts	Operating Current
20	23	.19
35	41	.34
37	42	.35
42	47	.39
50	57	.48
65	70	.58
71	77	.64
75	81	.68

PINHOLE ELEMENT VARIETIES (PLAN VIEW)

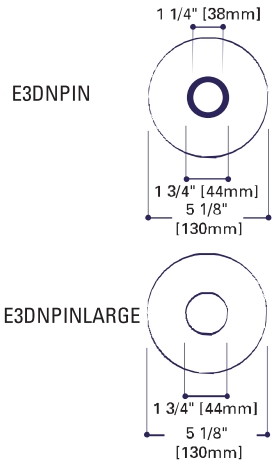

ORDERING INFORMATION

Complete unit consists of a platform, and element

Platform

PN3MR

PN3MR=3" Airtight Non-IC Low Voltage Housing

PN3MR-REMOTE= 3" Airtight Non-IC Low Voltage Housing for Remote Transformer

Optical Element

E3DNPIN = MR16 1-1/4" Downlight Pinhole

E3DNPIN-LARGE = MR16 2" Downlight Pinhole

Flange

Blank=White with Black Occulus

RAW=Natural Die-cast with Black Occulus

W = White with white occulus

POL = Polished Aluminum with Black Occulus

SAL = Satin Aluminum with Black Occulus

*White Occulus is not available for LARGE pinhole

Accessories

MBCLP = 40 Push On T Bar Clips (for 10 Units)

PLE3 = Plaster Lip Extension for Max 2" Thick Ceiling

FMC3 = Flush Mount Collar

LSPD = Spread Lens

LLNR = Linear Spread Lens

LUV = UV Reduction Lens

LLPINK = Light Pink Lens

LLSTRAW = Light Straw Lens

L27K = 2700K dichroic filter

LDAY = Daylight Lens

LSPINK = Surprise Pink Lens

LPLAV = Pale Lavender Lens

LHEX= Hex Cell Louver

For additional options please consult factory.

PHOTOMETRICS

PN3MR-E3DNPIN
Test No. H21242

Lamp: GE Q50MR16C/NSP15
Lumens: 750

Cutoff: 50°
Spacing: 0.2
Efficiency: 38.7%

Candelas

Vertical Angle	CD
90	0
85	0
75	0
65	0
55	0
45	0
35	0
25	7
15	42
5	3985
0	5788

Distribution

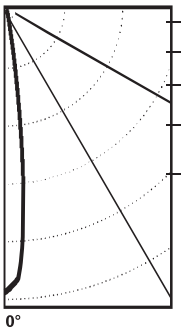

Luminance

Degree	cd/m²
85°	0
75°	0
65°	0
55°	0
45°	0

Cone of Light

Distance to Illuminated Plane	Initial Nadir Footcandles	Beam Diameter
6'	154	1.8
7'	113	2.1
8'	87	2.4
9'	69	2.7
10'	56	3.0
12'6"	36	3.8
13	33	3.9

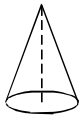

Q20 MR16/C/VNSP7

7,400 CBCP
Lumens: 200
Spacing: 0.1
Efficiency: 31.4%

0° Aiming Angle Horizontal Footcandles — Beam 7°

D	FC	L	W
6'	87	0.7	0.7
8'	49	0.9	0.9
10'	31	1.1	1.1
12' 6"	20	1.4	1.4

Test # H21233

Q37 MR16/IR/SP10

13,100 CBCP
Lumens: 900
Spacing: 0.2
Efficiency: 32.7%

Beam 10°

D	FC	L	W
6'	151	1.3	1.3
8'	85	1.8	1.8
10'	54	2.2	2.2
12' 6"	35	2.8	2.8

Test # H21258

Q42 MR16/C/VNSP9

12,500 CBCP
Lumens: 575
Spacing: 0.1
Efficiency: 21.2%

Beam 9°

D	FC	L	W
6'	123	0.8	0.8
8'	69	1	1.6
10'	44	1.3	2
12' 6"	28	1.6	2.5

Test # H21207

Q45 MR16/IRC/SP8

16,000 CBCP
Lumens: 1030
Spacing: 0.2
Efficiency: 25.0%

Beam 8°

D	FC	L	W
6'	171	1	1
8'	96	1.4	1.4
10'	62	1.7	1.7
12' 6"	39	2.2	2.2

Test # H21224

Q50 MR16/C/FL40

1,700 CBCP
Lumens: 800
Spacing: 0.6
Efficiency: 39.0%

Beam 40°

D	FC	L	W
6'	38	3.2	2.5
8'	21	4.2	3.4
10'	14	5.3	4.2
12' 6"	9	6.6	5.3

Test # H21206

Q50 MR16/C/NFL25

3,000 CBCP
Lumens: 884
Spacing: 0.3
Efficiency: 39.2%

Beam 25°

D	FC	L	W
6'	73	1.8	1.8
8'	41	2.4	2.4
10'	26	3	3
12' 6"	17	3.8	3.8

Test # H21188

Q65 MR16/Q/NSP/B

14,000 CBCP
Lumens: 1100
Spacing: 0.2
Efficiency: 20.1%

Beam 10°

D	FC	L	W
6'	89	1.4	1.4
8'	50	1.9	1.9
10'	32	2.4	2.4
12' 6"	20	3	3

Test # H21270

Q65 MR16/Q/FL40

2,100 CBCP
Lumens: 1100
Spacing: 0.42
Efficiency: 31.1%

Beam 40°

D	FC	L	W
6'	51	2.4	2.4
8'	29	3.2	3.2
10'	18	4	4
12' 6"	12	5	5

Test # H21262

Zonal Lumen Summary

Zone	Lumens	%Lamp	%Luminaire
0-30	290	38.7	99.9
0-40	291	38.7	100.0
0-60	291	38.7	100.0
0-90	291	38.7	100.0
90-180	0	0.0	0.0
0-180	291	38.7	100.0

Coefficient of Utilization

Ceiling Reflectance	80%				70%		50%		30%		0%
Wall Reflectance	70	50	30	10	50	10	50	10	50	10	0
Room Cavity Ratio											
0	46	46	46	46	45	45	43	43	41	41	39
1	45	45	44	44	44	43	42	42	41	40	39
2	44	43	43	42	43	41	42	41	41	40	38
3	44	42	42	41	42	40	41	40	40	39	38
4	43	42	41	40	41	40	41	39	40	39	38
5	42	41	40	39	41	39	40	39	40	39	38
6	42	41	40	39	40	39	40	39	39	38	38
7	42	40	39	39	40	38	40	38	39	38	38
8	41	40	39	38	40	38	39	38	39	38	38
9	41	40	39	38	39	38	39	38	39	38	38
10	41	39	38	38	39	38	39	38	39	38	37

Notes and Formulas:

Luminance: To convert cd/m² to footlamberts, multiply by 0.2919

Cone of Light:
- Beam diameter is to 50% of maximum footcandles, rounded to the nearest half-foot.
- Footcandle values are initial. Apply appropriate light loss factors where necessary. See page 64-65 of catalog.

CU Notes/Formulas:
- maintained illuminance = $\frac{\text{lamp lumens x CU x light loss factors}}{\text{room area}}$
- total number of luminaires = $\frac{\text{total room area x maintained illuminance}}{\text{lamp lumens x CU x light loss factors}}$
- CU data based on 20% effective floor cavity reflectance.

Note: Specifications and Dimensions subject to change without notice.

Visit our web site at www.cooperlighting.com