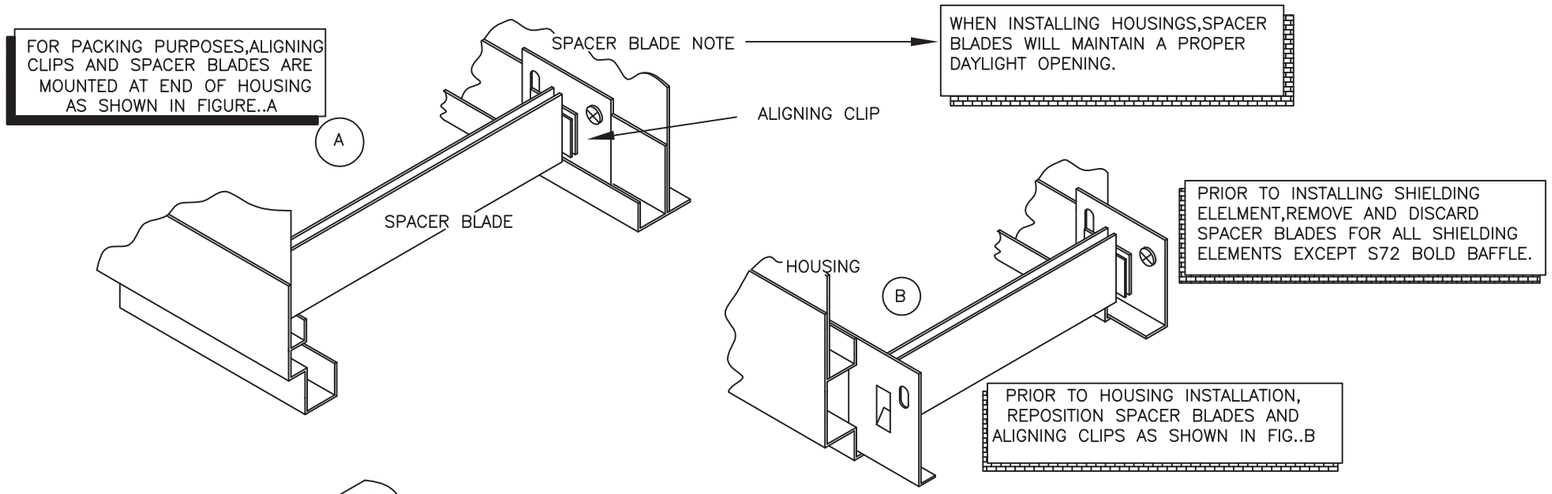

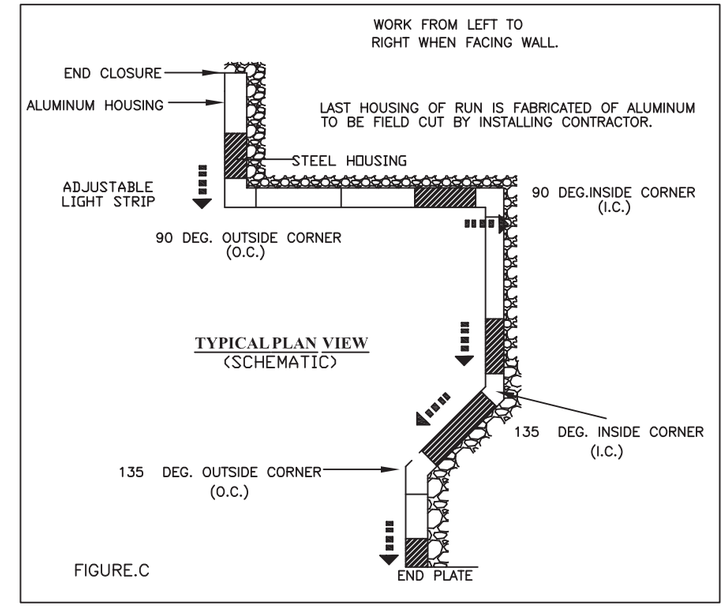

FIGURE.C

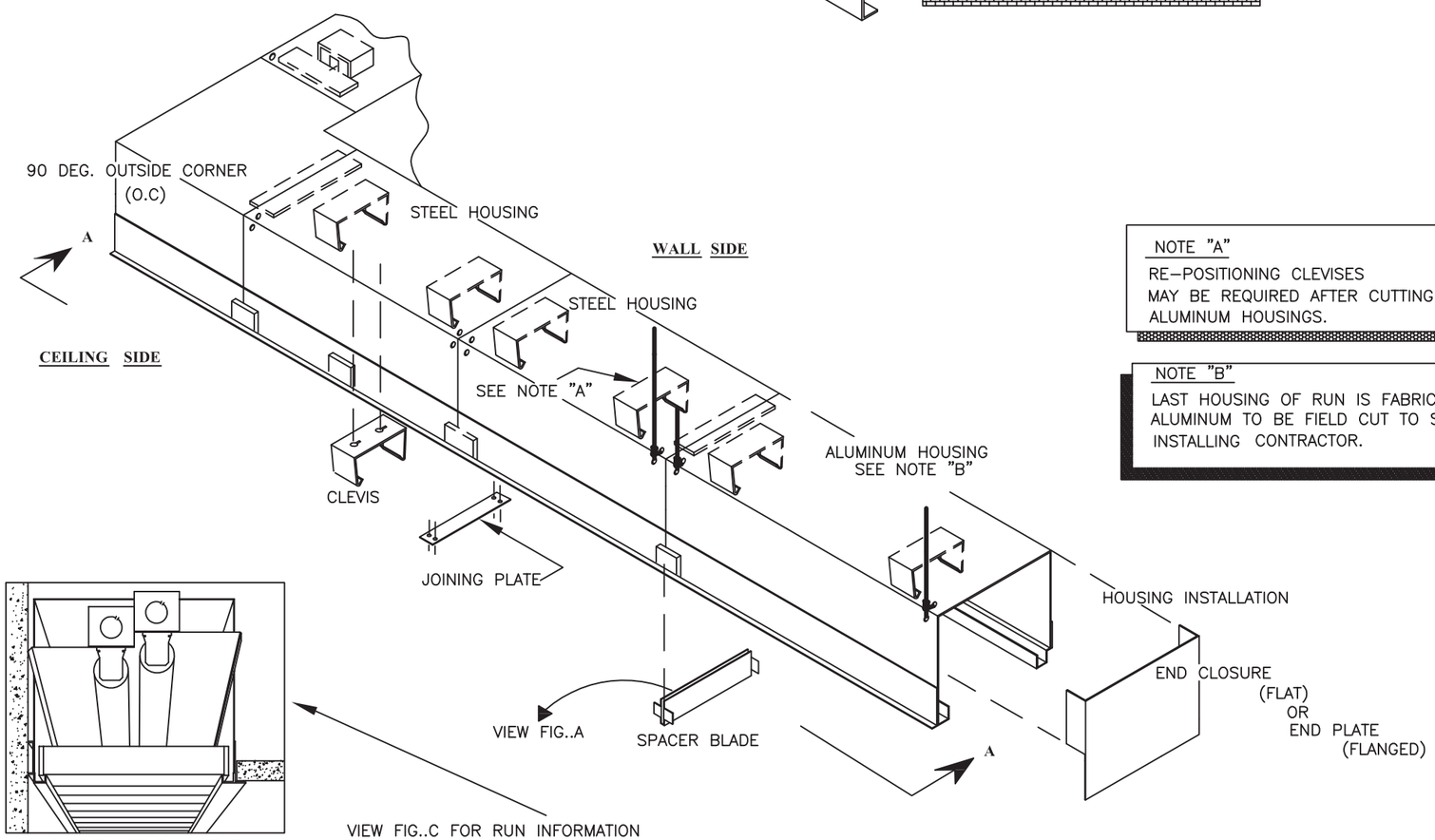

NOTE "A"
RE–POSITIONING CLEVISES MAY BE REQUIRED AFTER CUTTING ALUMINUM HOUSINGS.

NOTE "B"
LAST HOUSING OF RUN IS FABRICATED OF ALUMINUM TO BE FIELD CUT TO SUIT BY INSTALLING CONTRACTOR.

SERIES 78
PERIMETER TROUGH SYSTEM

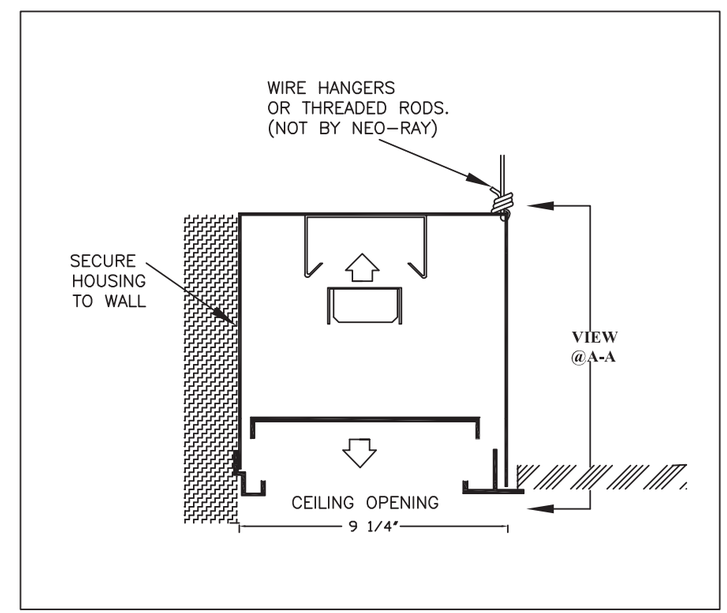

100 Andrews Rd., Hicksville, NY 11801 • Phone: 516-470-1000 • Fax: 516-470-1077 • http://www.neoray-lighting.com

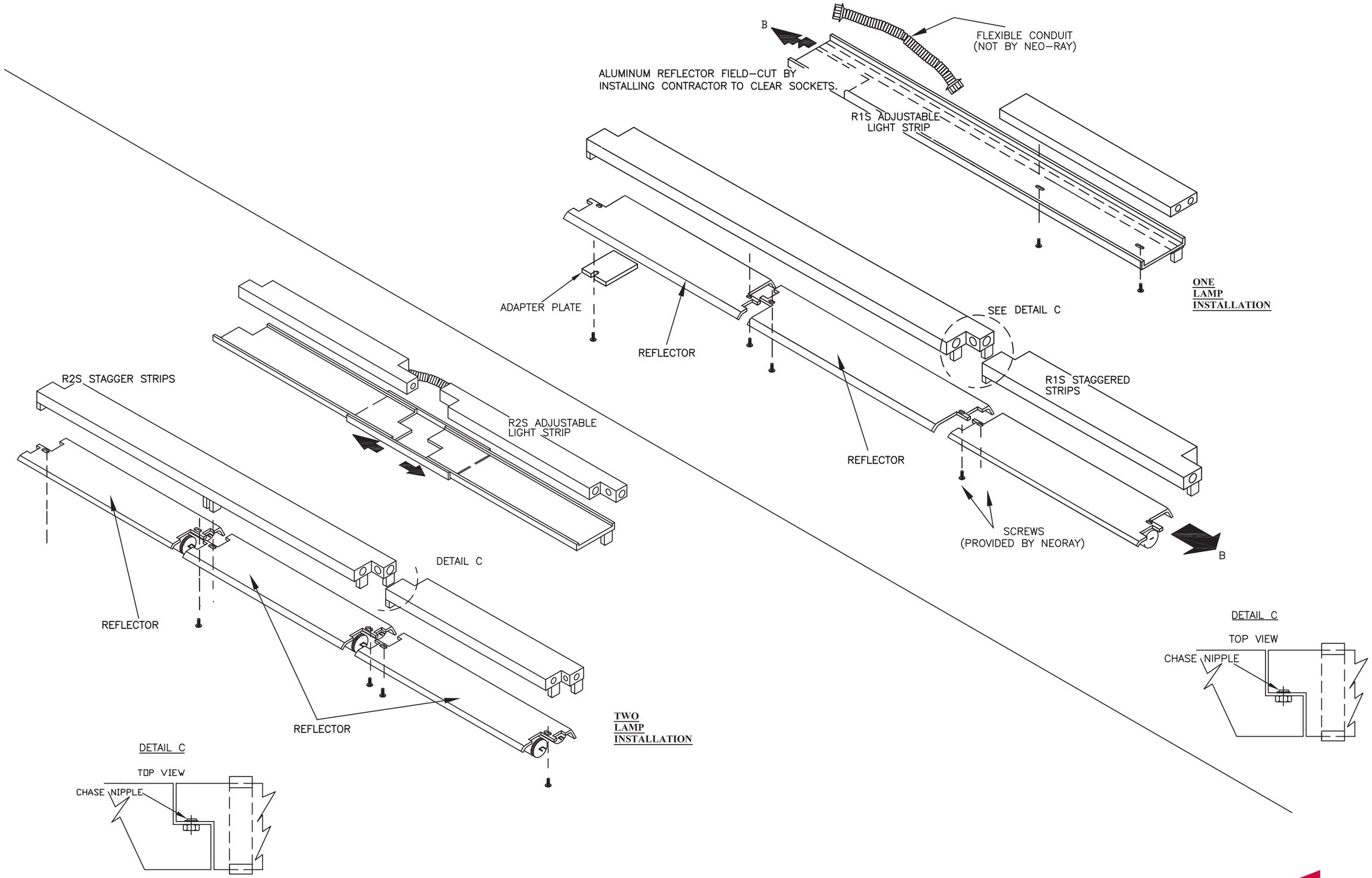

100 Andrews Rd., Hicksville, NY 11801 • Phone: 516-470-1000 • Fax: 516-470-1077 • http://www.neoray-lighting.com