DORN BRACHT

WC - Madison
Tissue holder without cover - platinum
Article number: 83 500 361-08



- Width 5-3/4"
- Height 4-3/4"
- 3-3/4" Projection



platinum

Dimensional drawing

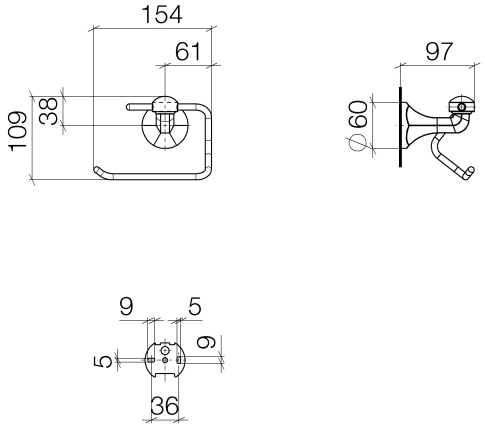

All dimensions in mm / inch = mm x 0,0394