WC - Madison
Tissue holder without cover - platinum
Article number: 83 500 361-08



- Width 5-3/4"
- Height 4-3/4"
- 3-3/4" Projection

platinum

Dimensional drawing

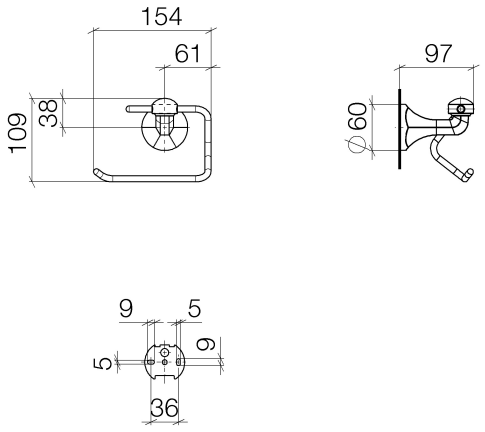

All dimensions in mm / inch = mm x 0,0394

WC - Madison
Tissue holder without cover - platinum
Article number: 83 500 361-08

Other surface finishes



polished chrome
83 500 361-00



platinum matte
83 500 361-06



Durabrass
83 500 361-09

Other surfaces upon request (extra service)