DORN BRACHT

WC - Madison
Tissue holder without cover - platinum
Article number: 83 500 361-08



- Width 5-3/4"
- Height 4-3/4"
- 3-3/4" Projection

platinum

Dimensional drawing

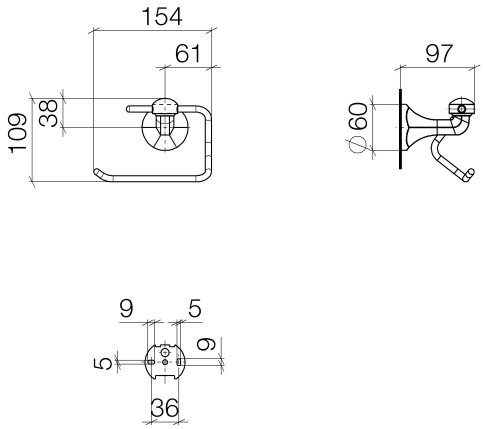

All dimensions in mm / inch = mm x 0,0394

WC - Madison
Tissue holder without cover - platinum
Article number: 83 500 361-08

Other surface finishes



polished chrome
83 500 361-00



platinum matte
83 500 361-06



Durabrass
83 500 361-09

Other surfaces upon request (extra service)

Exploded drawing

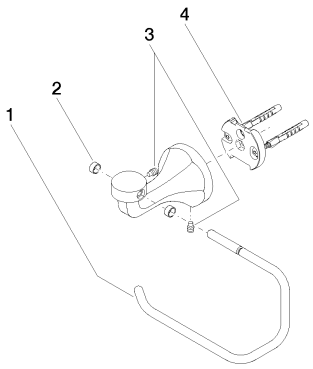

Spare parts list

Number	Item Number	Designation	Number of units
1	08 18 70 501-08	Holder - platinum	1
2	08 18 40 505 90	Hood / sleeve -	2
3	04 31 11 140 00 90	pin	2
4	05 17 97 507 00 90	Mounting bracket -	1