DORN BRACHT

Bathtub - IMO

Tub spout with diverter for deck-mounted installation - polished chrome

Article number: 13 512 670-00



- 8-7/8" Projection
- Recatangular aerator
- Integrated diverter
- Total height 6-3/4"
- Height to aerator/spout outlet 5-3/8"
- 1-1/4" hole diameter
- Flange 2-3/8" x 2-3/8"
- 1/2" connection
- Water flow rate limited to max. 7.9 gpm
- Fittings group in compliance with DIN 4109: 2
- Internal backflow preventer.
- Diverter cannot be deactivated



polished chrome

Dimensional drawing

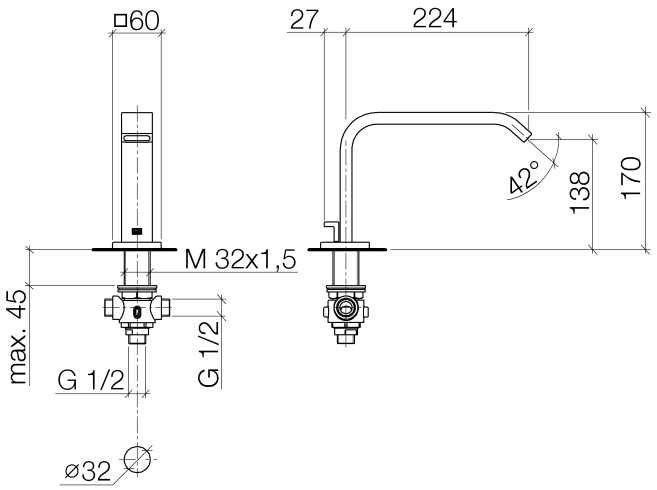

All dimensions in mm / inch = mm x 0,0394