DORN BRACHT

# Bathtub - IMO

## Tub spout with diverter for deck-mounted installation - polished chrome

Article number: 13 512 670-00



- 8-7/8" Projection
- Recatangular aerator
- Integrated diverter
- Total height 6-3/4"
- Height to aerator/spout outlet 5-3/8"
- 1-1/4" hole diameter
- Flange 2-3/8" x 2-3/8"
- 1/2" connection
- Water flow rate limited to max. 7.9 gpm
- Fittings group in compliance with DIN 4109: 2
- Internal backflow preventer.
- Diverter cannot be deactivated



polished chrome

## Dimensional drawing

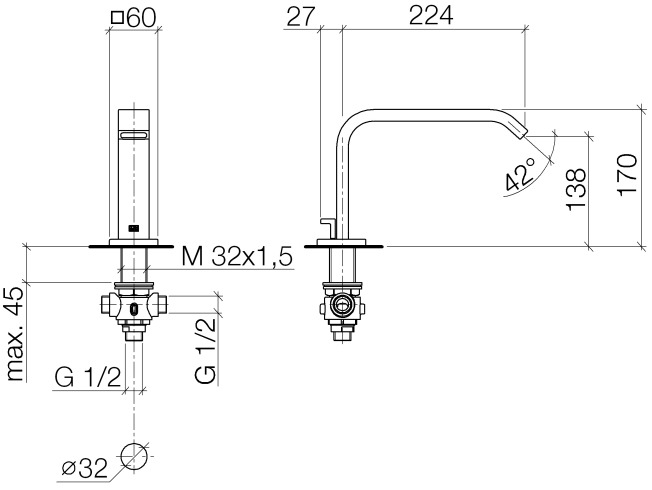


All dimensions in mm / inch = mm x 0,0394

Bathtub - IMO
Tub spout with diverter for deck-mounted installation - polished chrome
Article number: 13 512 670-00

## Flow rate chart

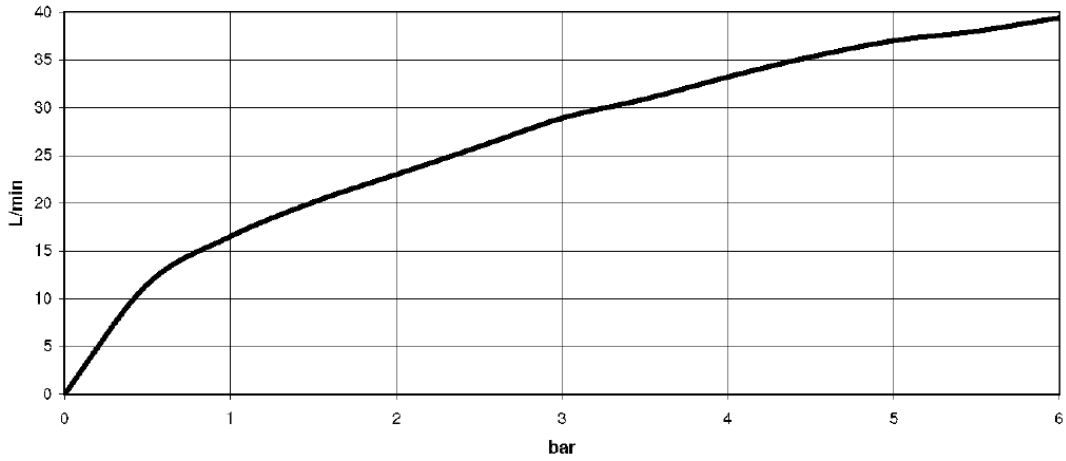


## Other surface finishes



platinum matte
13 512 670-06

Other surfaces upon request (extra service)