DORN BRACHT

Bathtub - IMO

Tub spout with diverter for deck-mounted installation - polished chrome

Article number: 13 512 670-00



- 8-7/8" Projection
- Recatangular aerator
- Integrated diverter
- Total height 6-3/4"
- Height to aerator/spout outlet 5-3/8"
- 1-1/4" hole diameter
- Flange 2-3/8" x 2-3/8"
- 1/2" connection
- Water flow rate limited to max. 7.9 gpm
- Fittings group in compliance with DIN 4109: 2
- Internal backflow preventer.
- Diverter cannot be deactivated



polished chrome

Dimensional drawing

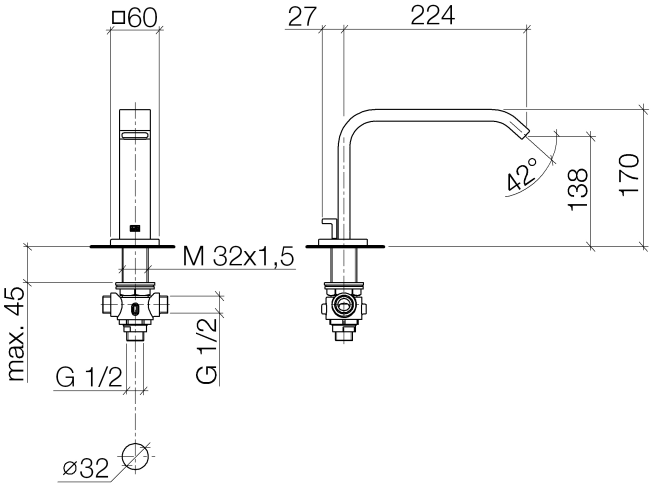

All dimensions in mm / inch = mm x 0,0394

Bathtub - IMO
Tub spout with diverter for deck-mounted installation - polished chrome
Article number: 13 512 670-00

Flow rate chart

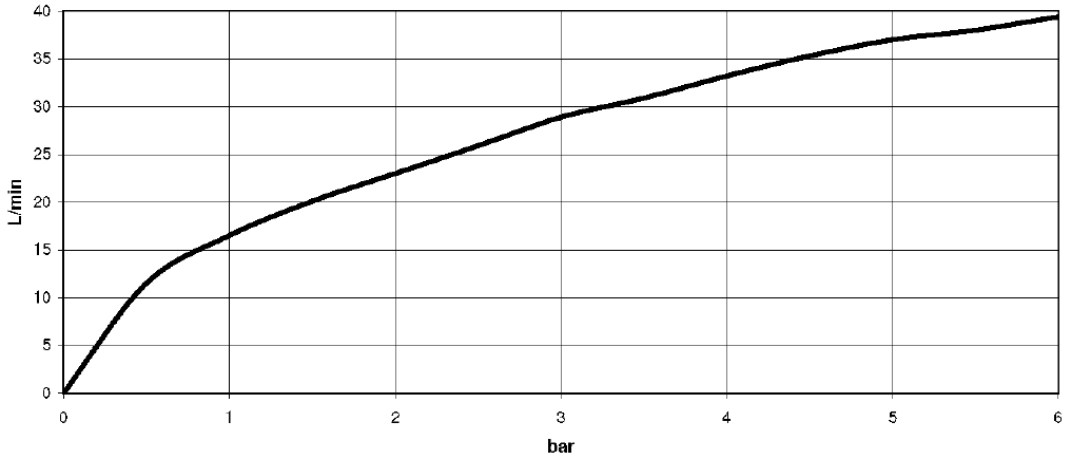

Other surface finishes



platinum matte
13 512 670-06

Other surfaces upon request (extra service)

Bathtub - IMO
Tub spout with diverter for deck-mounted installation - polished chrome
Article number: 13 512 670-00

Exploded drawing

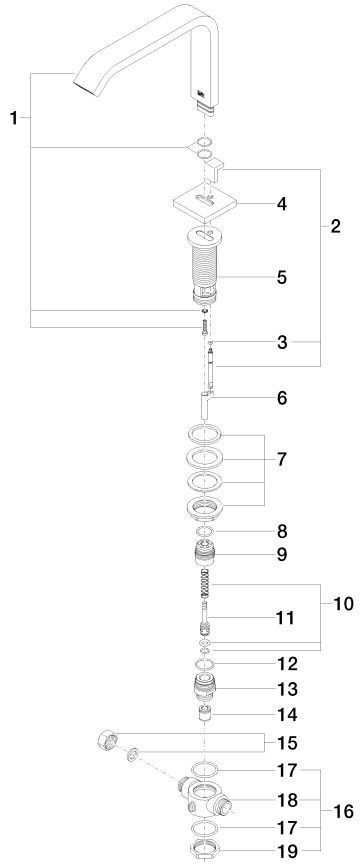

Spare parts list

Number	Item Number	Designation	Number of units
1	90 28 22 245 00-00	Outlet - polished chrome	1
2	04 20 78 030 00-00	Pivot rod/lift knob - polished chrome	1
3	09 14 10 113 90	Washer -	1
4	09 27 67 007-00	Escutcheon - polished chrome	1
5	09 30 01 089 20 90	Wall connection -	1
6	09 17 20 067 90	Holder -	1
7	04 23 10 009 01 90	Mounting bracket -	1
8	09 14 10 122 90	Washer -	1
9	09 24 03 105 20 90	Nipple -	1
10	90 16 02 023 00 90	Conversion -	1
11	09 31 09 032 20-00	Pivot rod/lift knob - polished chrome	1
12	09 14 10 056 90	Washer -	1
13	09 24 03 106 20 90	Nipple -	1
14	09 23 01 040 90	Application -	1
15	04 21 02 006 00 92	Plug for European drain -	1
16	04 17 11 043 00 90	Wall connection -	1
17	09 14 10 101 90	Washer -	2
18	09 17 11 043 20 90	Wall connection -	1
19	09 23 10 032 90	Mounting bracket -	1