Bathtub - VAIA
Tub spout without diverter for deck-mounted installation - platinum matte
Article number: 13 612 809-06

- 8-5/8" Projection
- Round aerated stream
- Total height 13-5/8"
- Height to aerator/spout outlet 9-5/8"
- 1-1/4" hole diameter
- Flange diameter 2-3/8"
- 1/2" connection
- Water flow rate limited to max. 5.7 gpm
- Fittings group in compliance with DIN 4109: 1
- Internal backflow preventer.

platinum matte

Dimensional drawing

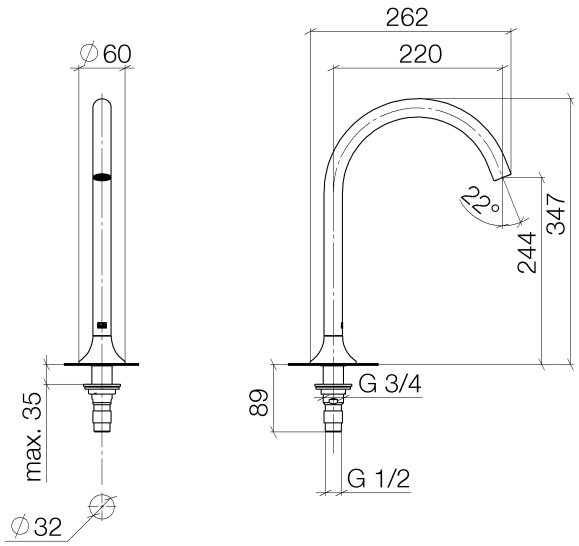

All dimensions in mm / inch = mm x 0,0394

Bathtub - VAIA
Tub spout without diverter for deck-mounted installation - platinum matte
Article number: 13 612 809-06

Flow rate chart

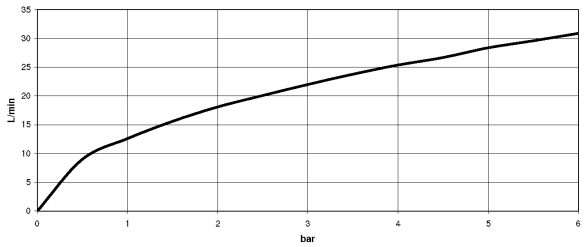

Other surface finishes

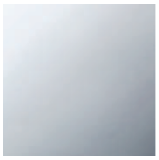

polished chrome
13 612 809-00

Dark Brass matte
13 612 809-16

Dark Bronze matte
13 612 809-17

Dark Platinum matte
13 612 809-99

Other surfaces upon request (extra service)

Bathtub - VAIA
Tub spout without diverter for deck-mounted installation - platinum matte
Article number: 13 612 809-06

Exploded drawing

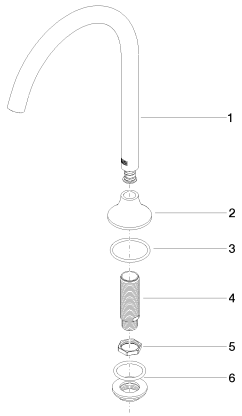

Spare parts list

Number	Item Number	Designation	Number of units
1	90 28 22 316 00-06	Outlet - platinum matte	1
2	09 27 80 014-06	Escutcheon - platinum matte	1
3	09 14 10 084 90	Washer -	1
4	90 30 01 033 00 90	Wall connection -	1
5	09 23 10 127 90	Mounting bracket -	1
6	04 23 10 004 04 90	Mounting bracket -	1
7	04 17 11 020 10 90	Wall connection -	1
8	90 23 10 012 00 90	Mounting bracket -	1