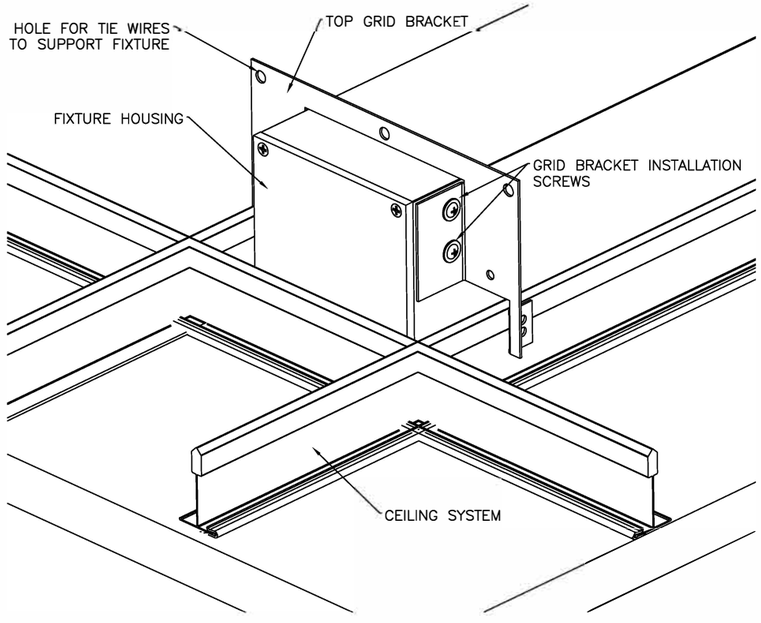


REMOVAL OF THE TOP GRID BRACKETS BY INSTALLING CONTRACTOR IS NECESSARY TO RAISE FIXTURES INTO THE CEILING SYSTEM. ONCE IN THE GRID, CONTRACTOR TO REINSTALL THE TOP GRID BRACKETS. ACCESS TO UPPER CEILING STRUCTURE IS REQUIRED TO MOUNT THE FIXTURES.

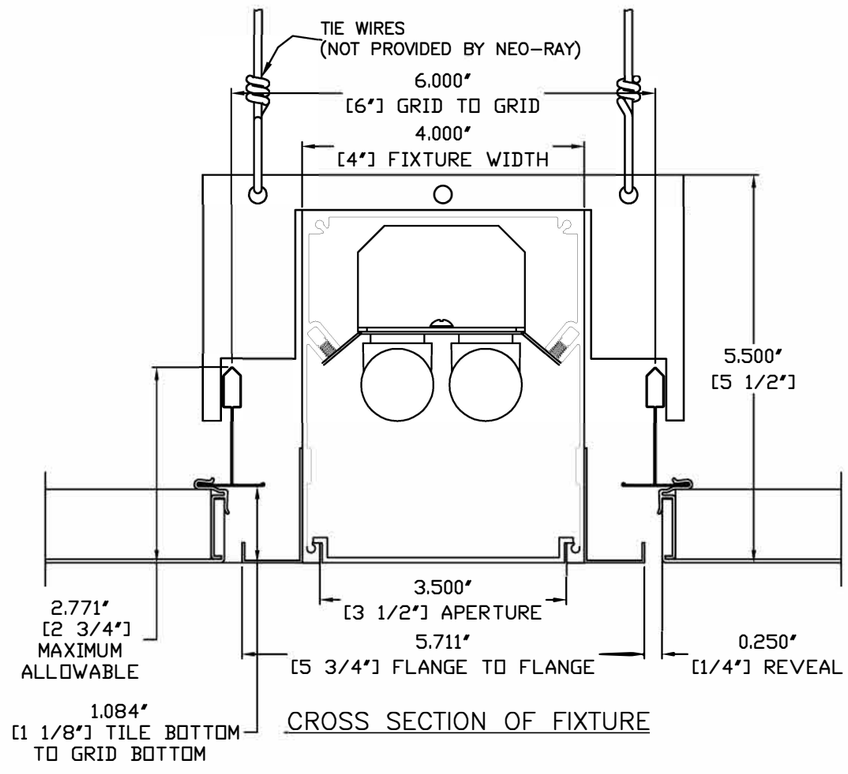


CROSS SECTION OF FIXTURE

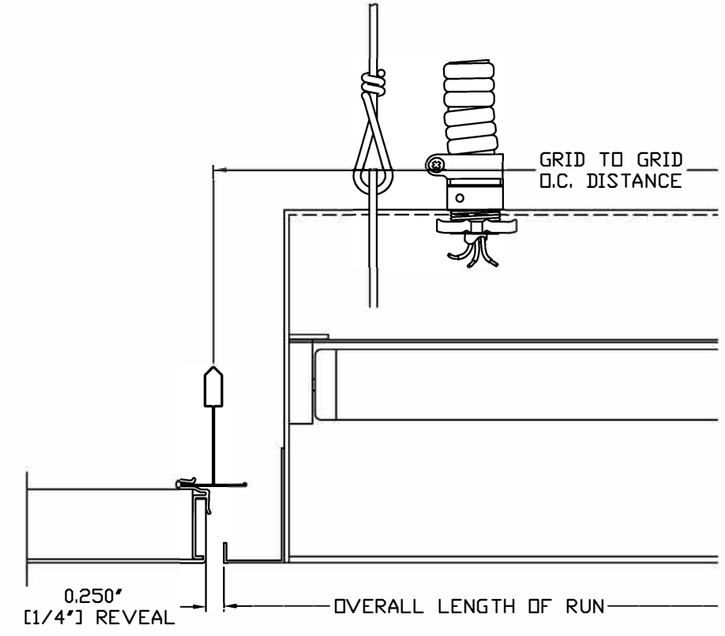


SIDE VIEW

## SPECIFICATIONS

| | |
|---|---|
| LIGHTING | DIRECT |
| MOUNTING | Hunter Douglas Ceilings & Walls exclusively from CertainTeed, Inc. Techstyle |
| LENGTH | NOMINAL 4', 6' & 8' HOUSING WITH HOUSING FLANGE AT END TO FIT GRID CEILING PATTERN |
| SHIELDING | S93 SATIN OPAL WHITE |
| LAMPS | (2)T8, 3FT & 4FT (NOT BY NEO-RAY) |
| BALLAST | UNIVERSAL VOLTAGE, ELECTRONIC EXTRUDED INSTANT START |
| MATERIAL | ALUMINUM HOUSINGS |
| FINISH | POWDER COATED BAKED WHITE |

CATALOG No.

# PDR-S23DR/2T8-S93

Hunter Douglas Ceilings & Walls exclusively from CertainTeed, Inc. – Techstyle Ceiling

UL LISTED AND UNION MADE, IBEW/AFL-CIO

APPROVED BY _____ DATE___/___/___

| | | |
|---|---|---|
| B | | |
| A | | |
| | DATE | REVISIONS |

TYPE

THIS DOCUMENT IS THE CONFIDENTIAL AND PROPRIETARY PROPERTY OF NEO-RAY AND MAY NOT BE USED OR REPRODUCED NOR ITS CONTENTS DIVULGED WITHOUT NEORAY'S CONSENT OR KNOWLEDGE.

neoray
100 Andrews Road., Hicksville, N.Y. 11801
TEL: 516-470-1000 FAX: 516-470-1077
COOPER Lighting WWW.COOPERLIGHTING.COM

CATALOG No. PDR8757-S23DSR/2T8-SI-S93

| QUANTITY | TYPE | GRID TO GRID OC DISTANCE | OVERALL LENGTH OF RUN | 8' | | | | 6' | | | | 4' | | | | 3' | | | | | | | | | |
|---|---|---|---|---|---|---|---|---|---|---|---|---|---|---|---|---|---|---|---|---|---|---|---|---|---|
| | | | | IND | BOR | INT | EOR | IND | BOR | INT | EOR | IND | BOR | INT | EOR | IND | BOR | INT | EOR | | | | | | |
| | | | | | | | | | | | | | | | | | | | | | | | | | |
| | | | | | | | | | | | | | | | | | | | | | | | | | |
| | | | | | | | | | | | | | | | | | | | | | | | | | |
| | | | | | | | | | | | | | | | | | | | | | | | | | |
| | | | | | | | | | | | | | | | | | | | | | | | | | |
| | | | | | | | | | | | | | | | | | | | | | | | | | |
| TOTALS | | | | | | | | | | | | | | | | | | | | | | | | | |

THIS IS NEO-RAY'S UNDERSTANDING OF THE LIGHTING FIXTURE REQUIREMENTS. THE CUSTOMER IS RESPONSIBLE FOR CONFIRMING THIS DATA WITH THE PROJECT REQUIREMENTS.

**PROJECT**
**TECHSTYLE CEILING - Hunter Douglas Ceilings & Walls exclusively from CertainTeed, Inc.**

DISTRIBUTOR:

| DRAWN BY | APPROVED | DRAWING NO. |
|---|---|---|
| DATE | SCALE | SHEET OF |