nienkämper

NOMAD®...Flexibility
interactive workspace

Screens
Charles Godbout & Luc Plante

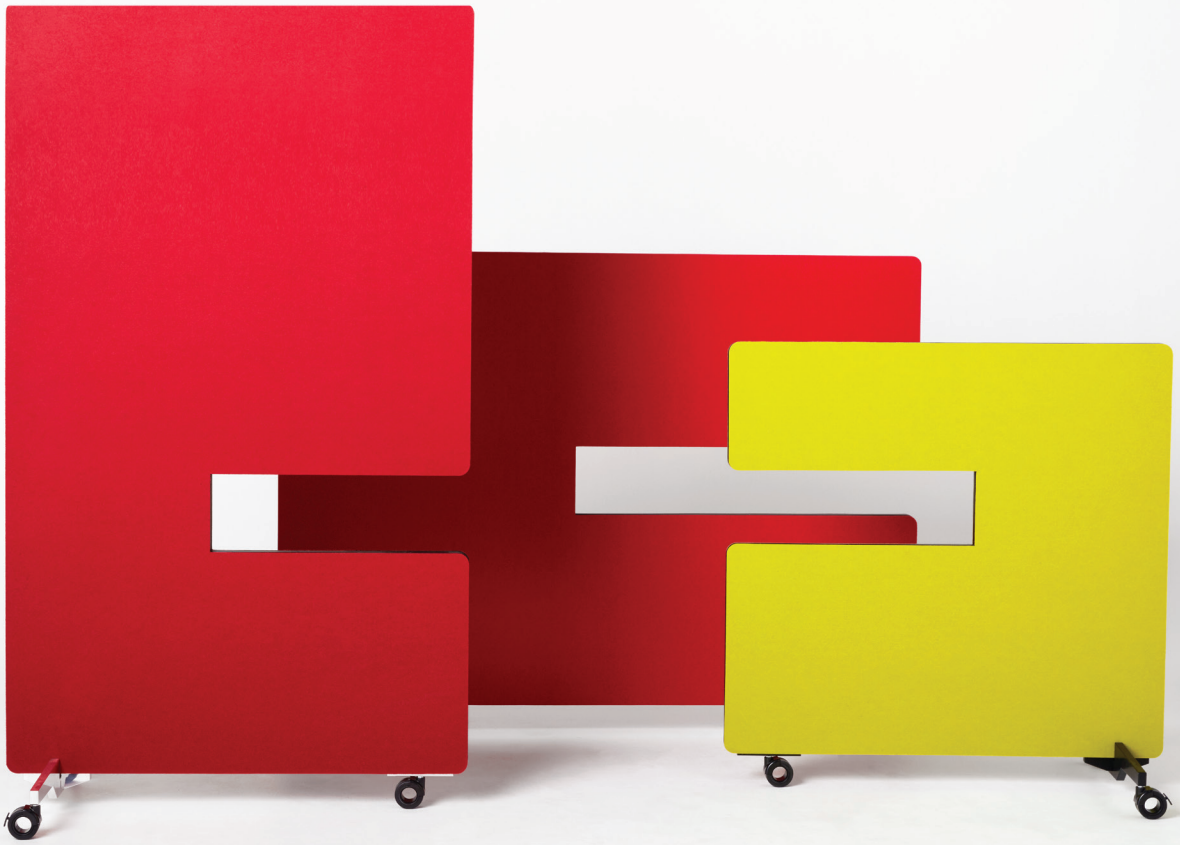

nienkämper

NOMAD®...Flexibility
interactive workspace

Screens
Charles Godbout & Luc Plante

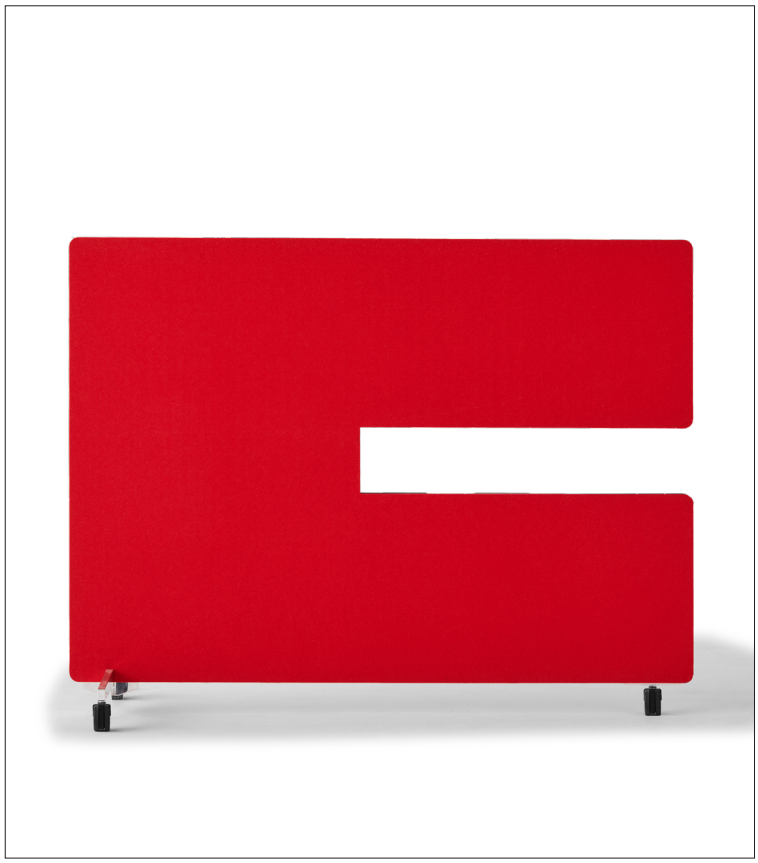

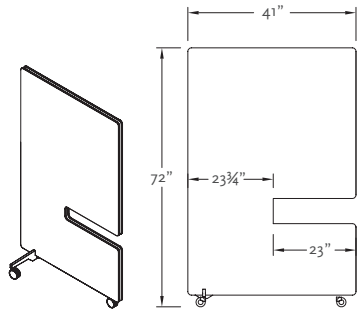

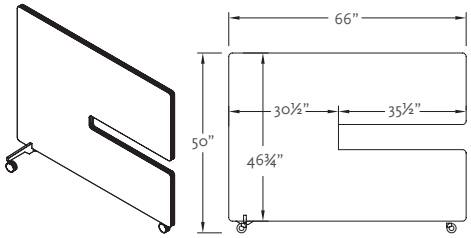

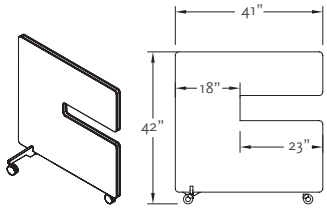

 © 2018 nienkämper

CANADA'S BEST MANAGED COMPANIES
Platinum member 7 years