GSA prices effective January 30, 2023
(based on October 3, 2022, commercial price list)
Published July 2023

Workspaces

Overlay™

General Services Administration
Federal Supply Service
Authorized Federal Supply Schedule Price List

Online access to contract ordering information, terms and conditions, up-to-date pricing, and the option to create an electronic delivery order is available through GSA Advantage!®, a menu-driven database system.
The Internet address for GSA Advantage! is www.gsaadvantage.gov.

Office Furniture
FSC/PSC 7110/7125
Contract Number: GS-03F-036DA
UEI: Q2K3MSZ843D8
Contract Period: December 21, 2015—December 20, 2025

MillerKnoll, Inc.
855 East Main Avenue
Zeeland, Michigan 49464
(616) 654 3000 Phone
(616) 654 8278 Fax
www.HermanMiller.com/government

Business Size: Large

Contract Information

1a. Special Item Numbers (SIN)

SIN 33721

Furniture Systems, Computer Furniture, Filing and Storage, Tables and Accessories, Upholstered Seating and Multi-Purpose Seating, Project Management, Reconfiguration and Relocation Services, Design/Layout and Installation Services

SIN 33721P

Packaged Offices

SIN 337127

Modular Laboratory Furniture Systems

SIN OLM

Order-Level Materials (OLMs)

This SIN is only for products and/or services used in direct support of the purchase of new furniture. It requires approval from the ordering Contract Officer. Please contact your local MillerKnoll Inc. representative to discuss the appropriate use of this SIN.

SIN 532289

Leasing

Contact MillerKnoll Inc participating government dealer for current leasing information.

1b. Lowest Priced Model

SIN 33721: G9999.B $10

1c. Not applicable

2. Maximum Order

SIN 33721, 337127, NEW, OLM

$250,000 net product value

SIN 33721P

$250,000 net value

3. Minimum Order

$100 net

4. Geographic Coverage

Continental U.S.

Orders for Alaska, Hawaii, and Puerto Rico will be shipped F.O.B. inland carrier point of exportation.

5. Point of Production

Zeeland, Ottawa County, Michigan

Spring Lake, Ottawa County, Michigan

6. Pricing

Prices shown are list. Discounts include Industrial Funding Fee.

SIN 33721

Standard Lead Time, Single Order Net Purchase $100 - 250,000, includes approved Herman Miller Options Products.

Product Line	Discount From List
Action Office 1	73.8%
Action Office 2	73.8%
Aeron	64.5%
Ambit Workspace Solutions	74.3%
Aside	64.2%
C-Style Overhead Storage	73.8%
Canvas Office Landscape Channel	74.8%
Canvas Office Landscape Dock	74.8%
Canvas Metal Desk	74.8%
Canvas Office Landscape Metal Storage	74.8%
Canvas Office Landscape Private Office	74/8%
Canvas Office Landscape Wood Storage	74.8%
Canvas Office Landscape Vista	74.8%
Canvas Office Landscape Wall	74.8%
Caper	61.5%
Commend Nurses Station	73.3%
Cosm	61.7%
Eames® Conference & Dining Tables	73.6%
Easton Family	54.91%
Embody	59.7%
Ethospace System	73.8%
Everywhere™ Tables	73.8%
Exclave	61.7%
Headway™ Tables	73.8%
Intent Solution	58.7%
Layout Studio®	60.7%
Lino	63.7%
Meridian Laterals	67.3%
Meridian Pedestals	64.2%
Meridian Towers	62.7%
Meridian Storage	62.7%
Mirra 2	61.7%
Motia Tables	73.8%
Nevi™ Tables	73.8%
Nevi Link	73.8%
OE1 Boundary	72.8%
OE1 Micro Packs	73.8%
OE1 Storage	72.8%
OE1 Tables and Benching	73.8%
Overlay™	62.7%
Plex® Lounge Furniture	59.5%
Public Office Landscape	61.7%
Renew™ Tables	73.8%
Renew Link	73.8%
Sayl	62.2%
Setu	59.7%
Swoop Lounge Furniture	60.7%
Thrive Portfolio	62.0%
Thrive Portfolio-CBS Products Extension	62.0%
Tu Lateral Files	74.3%
Tu Pedestals	73.8%
Tu Storage	74.3%
Tu Towers	74.3%
Tu Wood Cases	74.3%
Tu Wood Cubbies	74.3%
Tu Wood Credenzas	74.3%
Tu Wood Pedestals	74.3%
Tu Wood Towers	74.3%
Valor™ Family	54.91%
Verus	63.7%
Zeph	60.20%

Services

Please refer to section 19 for Terms and Conditions of Installation/ Reconfiguration and Relocation Services.

Project Management

Services under this SIN may be used only in conjuction with the purchase of new furniture. Please contact your local MillerKnoll Inc. representative to discuss the available labor categories (listed below). The hourly rates listed are "Not To Exceed" or "NTE" values.

Furniture Project Manager: $64.75 per hour
Furniture Project Coordinator: $49.00 per hour
Build-Out Project Manager: $80.00 per hour

Reconfiguration and Relocation Services

Reconfiguration and Relocation Services will be provided by MillerKnoll Inc. or its participating dealer based on a fee not to exceed $55 per hour.

See * Additional Notes for Installation & Reconfiguration and Relocation Services.

Design/Layout

Design service will be provided by MillerKnoll Inc. or its participating dealer based on a fee not to exceed $65 per hour.

Installation Services

Installation Services will be provided by MillerKnoll Inc. or its participating dealer based on a fee not to exceed $55 per hour ($82.50 per hour for after-hours Installation).

See * Additional Notes for Installation & Reconfiguration and Relocation Services.

SIN 337127

Standard Lead Time, Single Order Net Purchase $100 - 250,000, includes approved Herman Miller Options Products.

Product Line	Discount From List
Action Lab	58.5%
Compass System	58.5%
Co/Struc System	58.5%
Mora System	58.5%
Bedside Cabinets	58.5%

SIN 33721P

Packaged Office Furniture - Maximum Order $250,000 (net).

Includes packaged furniture solutions for customers needing to furnish an office.

7. Quantity Discounts

Reference item #6.

8. Payment Terms

Net 30 days

9. Government Commercial Credit Card

a. Government commercial credit cards are accepted below the micropurchase threshold.

b. Government commercial credit cards are accepted above the micropurchase threshold.

10. Foreign Items

None

11. Time of Delivery

a. 90 day ARO

b. Expedited delivery: Items listed in the 10-Day section of the catalogs are available for expedited delivery.

c. Overnight/2-day delivery: Select items may be available for overnight or 2-day delivery. Contact MillerKnoll Inc. or a participating dealer for availability and rates.

d. Urgent requirements: Agencies may contact contractor or participating dealer to request faster delivery.

12. F.O.B.

F.O.B. destination except Alaska, Hawaii, and Puerto Rico, which will be shipped F.O.B. inland carrier point of exportation.

13. Ordering Address

a. MillerKnoll Inc.
Government Customer Care 0161
855 East Main Avenue
Zeeland MI 49464.

b. For supplies and services, the ordering procedures information on Blanket Purchase Agreements (BPA's) are found in Federal Acquisition Regulation (FAR) 8.405-3.

14. Payment Address.

MillerKnoll Inc.
22764 Network Place
Chicago, IL 60673-1227

15. Warranty

MillerKnoll Inc. commercial warranty applies.

16. Export Packing Charge

Prices supplied on request.

17. Terms and Conditions of Government Purchase Card Acceptance

Accepted above and below the micropurchase level.

18. Rental Maintenance and Repair Terms

Not applicable

19. Terms and Conditions of Installation/Reconfiguration and Relocation Services

* Additional Notes for Installation & Reconfiguration and Relocation Services:

FOB Destination (Drop Ship): Price includes product delivery to the site, brought to the tailgate of the truck. The purchaser is responsible for unloading.

Prices effective up to the maximum order by SIN only. Above the MO, pricing shall be negotiated on a case-by-case basis between the client and local dealer.

Standard Services are Subject to the Following Conditions:

Installation will be performed during normal weekday working hours.

Adequate facilities for delivery, unloading, moving and staging/storing the product during the installation process shall be provided.

Service work will not be hindered by other trades.

Electric, heat, and adequate elevator service will be furnished without charge.

The immediate installation area shall be complete and free of debris including the carpet/flooring before installation commences.

Any work requiring a licensed electrician is the responsibility of the buyer.

Additional Charges May Apply For:

Major Metro Markets and any non-ground floor installation.

Major Metro Markets include large population centers and urban environments.

Installation in a clinical/medical environment.

Special restrictions or limits established by local laws,

ordinances or the directions of the buyer, including but not limited to restrictions on transportations of materials, street access to the job site and/or dock facilities.

Installations outside of a 50 mile radius of the servicing dealer.

Local Prevailing Wage and/or Union Labor Rates.

Any additional charges shall be quoted by the dealer and approved by the buyer prior to performance of the work.

20. Terms and Conditions of Repair Parts

Not applicable

21. Service and Distribution Points

For service and distribution points nearest you, call (800) 851 1196.

22. Participating Dealers

Access Herman Miller web site for current list of participating dealers: www.HermanMiller.com/where-to-buy/contact-a-dealer/. Select your market by using the filter.

23. Preventive Maintenance

Not applicable

24a. Special Attributes.

2022

MillerKnoll earns its 15th consecutive perfect score in Human Rights Campaign Foundation's 2022 Corporate Equality Index.

2021

The OE1 Trolley and Micro Packs are both winners of the 2021 Archiproducts international design competition in the Office Category.

MillerKnoll is named to Michigan's Best and Brightest in Wellness List for 2021.

MillerKnoll is awarded Platinum Rating in CSR by EcoVadis.

OE1 is named winner of Wallpaper's "Most Futuristic Furniture" Category as part of their first-ever Smart Space Awards.

OE1 receives the Workplace category award from Fast Company's 2021 Innovation by Design Awards.

MillerKnoll is named to Fast Company's Annual List of the World's Most Innovative Companies for 2021.

MillerKnoll is recognized as a "Disclosure Leader" by the Chemical Footprint Project (CFP).

MillerKnoll earns its 14th consecutive perfect score in Human Rights Campaign Foundation's 2021 Corporate Equality Index.

MillerKnoll is named to Newsweek's List of America's Most Responsible Companies 2021.

Great Lakes Women's Business Council awards MillerKnoll for "Excellence in Supplier Diversity" in the Best In Class category.

2020

Herman Miller is recognized with a 2020 FSC® Leadership Award for our commitment to responsible forestry management.

Herman Miller is named one of Investor's Business Daily Top 50 Best ESG (Environmental, Social, and Corporate Governance) Companies.

Working Mother names Herman Miller as one of the Best Companies for Dads.

Herman Miller is awarded Platinum Rating in CSR by EcoVadis.

Herman Miller is named Diversity Inc 2020 Noteworthy Company for recruitment efforts, employee development opportunities, leadership accountability, and supplier diversity.

Cosm, by Studio 7.5, receives an iF Gold Award in the Office and Industry category at the iF World Design Awards 2020.

Herman Miller earns its 13th consecutive perfect score in Human Rights Campaign Foundation's 2020 Corporate Equality Index.

2019

Mora System casework, designed by Collective Ten for Herman Miller, receives silver in the Industrial and Life Science Design/ Medical Furniture category at the European Product Design Awards.

Mora System casework is awarded GOOD DESIGN Award 2019, selected for design excellence and innovation.

National Minority Supplier Diversity Council (NMSDC) names Herman Miller as the 2019 Class 1 Corporation of the Year for leadership in supplier diversity.

TIME Magazine names Cosm to its list of 100 Best Inventions of 2019.

Herman Miller is named #12 Overall and #2 in Manufacturing on Investor's Business Daily Best ESG (Environmental, Social, Governance) Companies.

Herman Miller is recognized as a silver level Certified Veteran-Friendly Employer by the Michigan Veterans Affairs Agency for a commitment to veteran hiring, retention, and development.

For the second year in a row, Herman Miller receives a Gold Medal from EcoVadis in recognition of Corporate Social Responsibility achievement measured in categories of environment, labor and human rights, ethics, and sustainable procurement.

Herman Miller is named "Frontrunner" in Chemical Footprint Project by Clean Production Action for our chemical management policies and practices.

Herman Miller receives International Interior Design Association and Contract's best showroom design award in the "Large Showroom" category at NeoCon.

Herman Miller earns its 12th consecutive perfect score in Human Rights Campaign Foundation's 2019 Corporate Equality Index.

Cosm, designed by Studio 7.5 for Herman Miller, receives a Red Dot Best of the Best Product Design Award in the "Office Chairs" category.

Lino, designed by Sam Hecht and Kim Colin for Herman Miller, receives an iF Design Award in the Product Design category.

2018

Overlay, designed by Birsel+Seck, receives Interior Design Best of Year Award in the Partitions and Wall Systems category.

Herman Miller receives the "Corporation of the Year" in consumer products award from the Michigan Minority Supplier Development Council.

Herman Miller achieves the Advanced Excellence in Supplier Diversity Award from the Great Lakes Women's Business Council for doing business with women-owned suppliers.

Great Lakes Women's Business Council awards Herman Miller for "Excellence in Supplier Diversity" in the Advanced category.

WEConnect awards Herman Miller an Honorable Mention for global supplier diversity initiatives.

As one of the top-scoring companies in the industry for the 14th consecutive year, Herman Miller has qualified for inclusion in RobecoSAM's 2018 Sustainability Yearbook and receives the Silver Class distinction for excellent sustainability performance—economic, environmental, and social.

For the 11th consecutive year, Herman Miller receives a perfect score on the Human Rights Campaign Foundation's Corporate Equality Index and is designated as Best Place to Work for LGBT equality. This report evaluates U.S. companies in terms of diversity, particularly LGBT-related policies and practices.

Herman Miller receives Gold Medal from EcoVadis in recognition of Corporate Social Sustainability achievement measured in categories of environment, labor and human rights, ethics, and sustainable procurement. EcoVadis operates the first web-based collaborative platform that allows companies to assess the environmental and social performance of their global suppliers.

Aeron receives Good Design Award from The Chicago Athenaeum Museum of Architecture and Design.

The Cosm Chair wins Mix Interiors "Product of the Year—Task" award.

2017

Herman Miller receives "Rising Star Award" from the Michigan Veterans Affairs Agency (MVAA) for exhibiting new and novel approaches to veteran recruitment and hiring.

Herman Miller is named the 2017 "Corporation of the Year" in the consumer products sector by the Michigan Minority Supplier Development Council (MMSDC).

Herman Miller receives a 2017 SEAL (Sustainability, Environmental Achievement and Leadership) Business Sustainability Award. SEAL Award winners are determined by a holistic methodology measuring applicants against established benchmarks that demonstrate impact and progress toward creating a healthy planet and a sustainable future.

Herman Miller earns the 4 Star Diversity Visionary Award. This award celebrates the diversity, equality, and inclusion work of Herman Miller. The award is presented at the annual Diversity Equity Inclusion Summit, held by the Grand Rapids Area Chamber of Commerce.

Herman Miller is named one of the Best and Brightest in Wellness for the 5th year in a row.

Herman Miller earns its 10th consecutive perfect score in Human Rights Campaign Foundation's 2017 Corporate Equality Index.

As one of the top-scoring companies in the industry for the 13th consecutive year, Herman Miller has qualified for inclusion in RobecoSAM's 2017 Sustainability Yearbook and receives the Bronze Class distinction for excellent economic, environmental, and social sustainability performance. The selection criteria for inclusion in the Yearbook becomes more rigorous each year, and only the top 15 percent of companies within each industry are selected.

Herman Miller once again earns the WorldatWork Seal of Distinction, a unique standard of excellence in work-life effectiveness that shows we provide a distinct, mutually beneficial workplace experience. Herman Miller is the only furniture manufacturer among the 160 companies across the U.S. and Canada honored with the award.

Herman Miller's Mora wins Nightingale Silver Award in the "Furniture Collections" category at the 2017 Healthcare Design Conference.

2016

Herman Miller earns 9th consecutive perfect score in Human Rights Campaign Foundation's Corporate Equality Index and is designated as Best Place to Work for LGBT equality.

Herman Miller is recognized as the Business of the Year at the Annual Meeting of the West Michigan Environmental Action Council (WMEAC) for being an outstanding partner in support of the growth of WMEAC's programs. WMEAC's award goes to the business with the greatest depth and breadth of support, unwavering dedication to environmental action in West Michigan, and a strong corporate commitment to environmental advocacy.

The 101 Best and Brightest Sustainable Companies once again (5th consecutive year) recognizes Herman Miller as an organization in Michigan (and for the first time, in the nation) that exhibits leadership and innovation in its approach to sustainability. This award celebrates those companies that are making their businesses more sustainable, the lives of their employees better, and the community, both locally and globally, more responsible as a whole.

Herman Miller is recognized by the Michigan Minority Supplier Development Council (MMSDC) as a "Corporation of the Year". Additionally, we are the only West Michigan company this year to receive an "Ambassadors Championing Excellence" Award from the MMSDC.

Herman Miller is recognized with "2016 Excellence in Supplier Diversity Award" from the Great Lakes Women's Business Council.

Herman Miller is recognized as a 2016 Healthiest 100 Workplace in America, ranking 49th in the country for our commitment to health and exceptional corporate wellness programming.

Herman Miller receives the Best and Brightest in Wellness Award for the 4th year in a row. This program is an innovative initiative that recognizes and celebrates quality and excellence in health awareness.

The Michigan Occupational Safety and Health Administration renews Herman Miller's "Star" status, the highest workplace safety and health designation, for the Hickory facility in Spring Lake.

Plex Lounge Furniture from Herman Miller receives #MetropolisLikes award at NeoCon 2016.

Plex Lounge Furniture from Herman Miller receives Interior Design HiP Award for Workplace Seating/Lounge at NeoCon 2016.

Herman Miller is named a 2016 Women on Boards Winning Company. Companies selected for this recognition are considered champions of board diversity as 20 percent or more of their board seats are occupied by women.

Herman Miller is selected for inclusion in the 2016 RobecoSAM Sustainability Yearbook for the 12th consecutive year.

Herman Miller again earns the WorldatWork Work-Life 2016 Seal of Distinction. This award identifies organizations that focus on programs that promote work-life balance and overall well-being.

24b. Section 508 Compliance

Not applicable

25. Data Universal Numbering System (DUNS): 00-601-2801

26. Registered in System for Award Management (www.SAM.gov) Database

Unique Entity ID: Q2K3MSZ843D8

27. Cancellation

Prior to production, no cancellation charge will apply. After production, only actual cost incurred that the contractor can demonstrate if items are sold after 3 months.

28. Restocking Charges

Agencies must notify the contractor for authorization prior to returning any items. The customer agency will be required to pay all packaging and return freight charges. A restocking fee of 50% for Systems Furniture and 35% for all other product lines will be charged for any returned items.

Returns and restocking policy is not applicable to products under SIN 337127.

MillerKnoll Inc. Miscellaneous Information:

Federal ID Number: 38-0837640

Commercial and Government Entity Code (CAGE): 40636

Data Universal Numbering System (DUNS) 00-601-2801

Commercial Entity Code (CEC): 00702290J

Contents

Introduction	**page 2**
Overlay™	**3**
Structure	5
Cladding/Infills	17
Accessories	37
Power	46
Indices	**67**
By Name	67
By Number	69
Appendices	
20-Day or Less/Assigned Lead-Time Order Information	
Proprietary Textiles Application Chart-Workspaces	
Proprietary Textile Colors-Workspaces	
Maharam Application Chart-Workspaces	
Maharam Colors-Workspaces	

For the latest materials information, refer to the Materials pages on HermanMiller.com.

Introduction

A Note on the Organization of This Book

There are a few signals that will help you understand the organization of this book. Once you know them, you should be able to find your way around easily.

Like a newspaper, this book is formatted with columns of text and illustrations that run vertically.

Information wraps from one column to the next and continues for as many pages as it needs to.

Black bars are clues.

A black bar at the top of a page signals the start of information about a product.

This information is divided into two sections, each signaled by a black bar. Product Information includes a description, additional notes, and dimensional drawings. Specification Information, which always begins at the top of a column, includes a series of steps. Each step represents a decision you need to make in order to complete your product number. Steps must be followed sequentially. The number of pages needed to complete information on a product varies; some will be complete in one page; others may fill three or four pages. Just continue going through the steps until you run into the next product, signaled by the black bar at the top of the page.

Black tabs running along the outside edge of the page help you locate what section you are in or what section you want to go to. You can thumb forwards or backwards to find a section; tabs and text appear on both sides of the page.

The additional pages in the back of the book include the appendices and indices. They are signaled by a long black bar running along the outside edge of the page.

The index is presented two ways.

The first index is in alphabetical order by product name. It can be helpful if you are new to the products and numbering scheme or if you are looking for a type of product, such as work chair or round table.

The second index is by product number. It lists, in alphanumeric order, the base product number, typically a five-digit number.

This book is effective January 30, 2023, subject to change without notice. Products may be purchased from authorized Herman Miller dealers who will quote prices upon request. For more information about our products and services or to see a list of dealers, visit www.HermanMiller.com.

All prices are list prices in US Dollars. Additional services, such as planning services, design, storage, and installation, are not included and must be added to these prices when the additional services are requested.

Illustrations, specifications, and prices are based on the latest information at the time of publication. The right is reserved to make changes at any time without notice in prices, fabrics, finishes, materials, specifications, and models, and also to discontinue models and finishes.

Dimensions shown in the drawings are engineering drawing dimensions rounded up to the nearest 1/8". Product is shipped set up or knocked down. Products that include "Shipped knocked down" in the description require some assembly. If this statement does not appear in the description, the product is shipped assembled.

Service problems are normally handled by a Herman Miller authorized dealer. Where this cannot be accomplished on a local level, service problems should be referred to the Customer Care Representative for your region, Herman Miller, Inc., Zeeland, Michigan 49464.

20-Day or Less/Assigned Lead-Time Shipments

All products and options in this price book not designated by an Assigned Program icon A will ship in **20 business days or less** after being acknowledged by Herman Miller.

Products and options designated by an A are on the assigned lead- time program and may ship in 20 days, less than 20 days, or more than 20 days from order acknowledgement.

Structure

Cladding/Infills

Accessories

Power

Performance Wall Structure MN200.

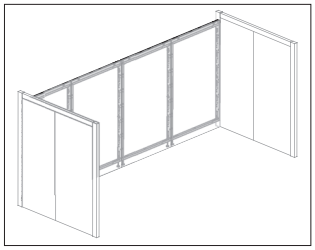

Product Information

Description

This structural steel frame holds cladding on both sides. It includes feet with self-leveling glides and has no base option. Structure includes necessary hardware, stiffeners, frame-to-frame connector kits, and wall start hardware when specified.

Notes

Performance wall structure must be clad the entire length with performance wall cladding (MN210.).

Structure frames must be supported with a performance column (MN300.) at each end, or at a single end when using a wall start.

Structure feet are not typically visible on level floors; cladding runs 1/2" above finished floor. Optional light seal (MN930.) is available.

When specifying wall start (YWS) option, order wall fasteners (X1192.) and toggle wall strip anchors (X1191.) separately.

Order the following products separately:

- Performance wall cladding (MN210.)
- Performance wall column (MN300.)

Order the following optional products separately:

- Performance wall cap (MN220.)
- Seismic Anchor (MN230.)
- Light seal (MN930.)

Dimensions

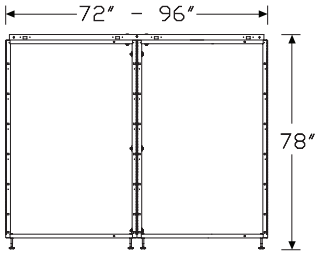

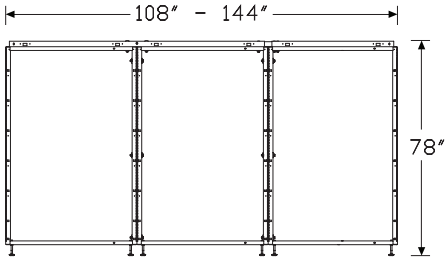

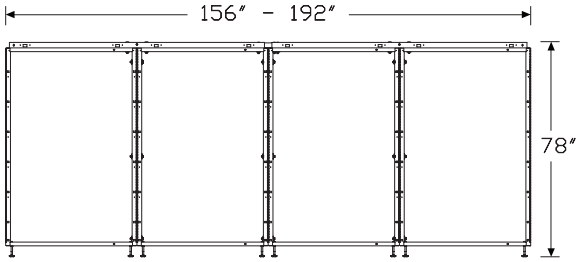

Performance Wall Structure

continued

Specification Information

Step 1.

MN200.

Step 2. Performance Wall Length

06	6′ long
07	7′ long
08	8′ long
09	9′ long
10	10′ long
11	11′ long
12	12′ long
13	13′ long
14	14′ long
15	15′ long
16	16′ long

Step 3. Wall Start

NWS	no wall start
YWS	wall start

Prices for Steps 1-3.

	NWS	YWS
MN200.06	$1061	1136
07	$1142	1218
08	$1223	1297
09	$1782	1858
10	$1876	1951
11	$1953	2029
12	$2032	2104
13	$2148	2223
14	$2262	2339
15	$2380	2455
16	$2494	2570

Performance Wall Cap MN220.

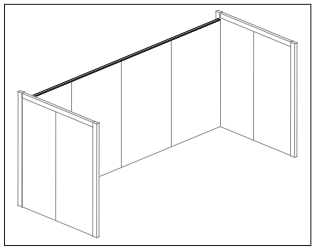

Product Information

Description

This optional component rests between the cladding at the top of the performance wall.

Notes

Cap is not visible unless viewing the configuration from above.

Cap length is 8′ and can be field cut. For walls longer than 8′, specify 2 or more caps.

Dimensions

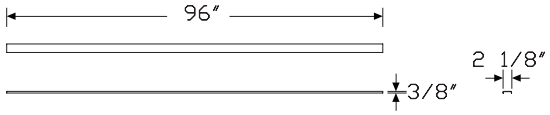

Specification Information

Step 1.

MN220. A

Step 2. 8′ Performance Wall Top Cap Section

08 8′ long A

Prices for Steps 1-2.

MN220.08	$71

Performance Wall Seismic Anchor Bracket

MN230.

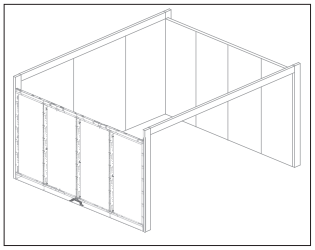

Product Information

Description

These performance wall seismic anchor brackets attach the performance wall structure to the floor. Brackets are required for walls longer than 12′ and are to be installed at the center of the wall. Anchor bolts not included.

Notes

Required seismic anchor bolts must be field supplied.

Anchor can be installed during standard installation.

Anchor is an optional component for most geographic locations. Refer to local codes and regulations.

Additional column anchors (MN240.) are required. Order separately.

Dimensions

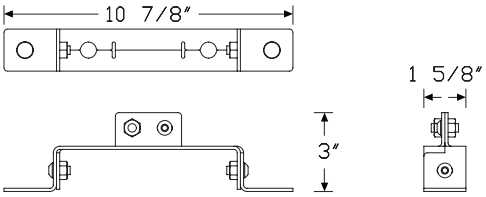

Specification Information

Step 1.

MN230.

Step 2. Anchor Bracket

01 performance wall anchor

Prices for Steps 1-2.

MN230.01	$508

Column Seismic Anchor Bracket MN240.

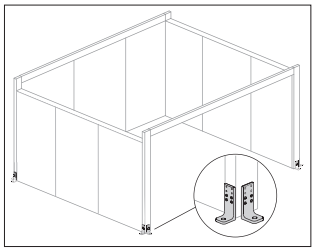

Product Information

Description

This column seismic anchor bracket attaches a performance wall column to the floor. Anchor bolts not included.

Notes

Required seismic anchor bolts must be field supplied.

All freestanding configurations require at least 8 column anchor brackets.

The number of column seismic anchor brackets is determined by the type of column per the setting configuration.

Column Type—Anchors

- 2-way, 90° connection (MN300.2L or .2R)—2
- 3-way, shared performance wall (MN300.3P)—1
- 3-way, shared spanner zone (MN300.3S)—1
- Return spanner (MN400.R)—2

The return spanner (MN400.R) has 3 surfaces on which anchors can be mounted; however, only 2 anchors are needed. Install the 2 anchors on surfaces on the outside of the full unit configuration.

Dimensions

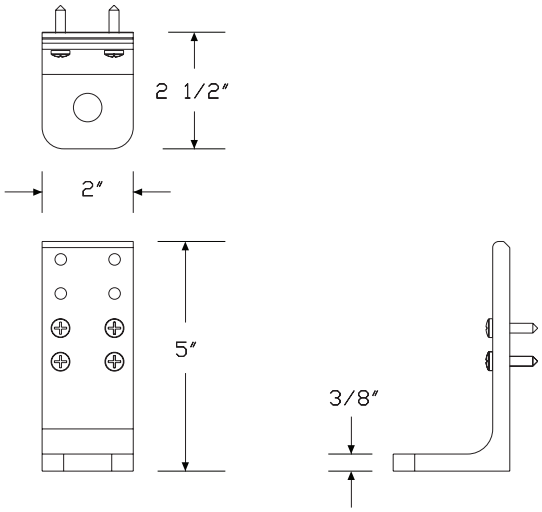

Specification Information

Step 1.

MN240.

Step 2. Column Type

2	2-way column (2 column brackets)
3	3-way column (1 column bracket)
R	return spanner column (2 column brackets)

Prices for Steps 1-2.

MN240.2		$388
	3	$195
	R	$388

Step 3. Finish

8Q	folkstone grey	+$0
91	white	+$0
98	studio white	+$0
BK	black	+$0
G1	graphite	+$0
MS	metallic silver	+$0
SNA	satin aluminum	+$10
SNB	satin bronze	+$10
SNC	satin carbon	+$10

Performance Wall Column MN300.

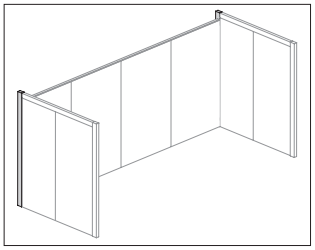

Product Information

Description

This steel column supports the performance wall structure and attaches it to spanner zone structure in several configurations. Attachment hardware included for connection to performance wall structure and spanner zone structure.

Notes

Column configurations:

- 2-way column (2L, 2R) connects performance wall structure (MN200.) with spanner zone structure (MN500.).
- 3-way column (3S) connects performance wall structure with 2 spanner zone structures.
- 3-way, shared performance wall column (3P) connects 2 performance wall structures with 1 spanner zone structure.
- 4-way column (4W) connects 2 performance wall structures with 2 spanner zone structures.

Column engagement refers to the connection of performance wall column to spanner zone structure or infill. When specifying column with engagement (Y, L, R, B, E), the column comes predrilled with necessary attachment holes. When specifying column with no engagement (N), the column does not have predrilled attachment holes.

Dimensions

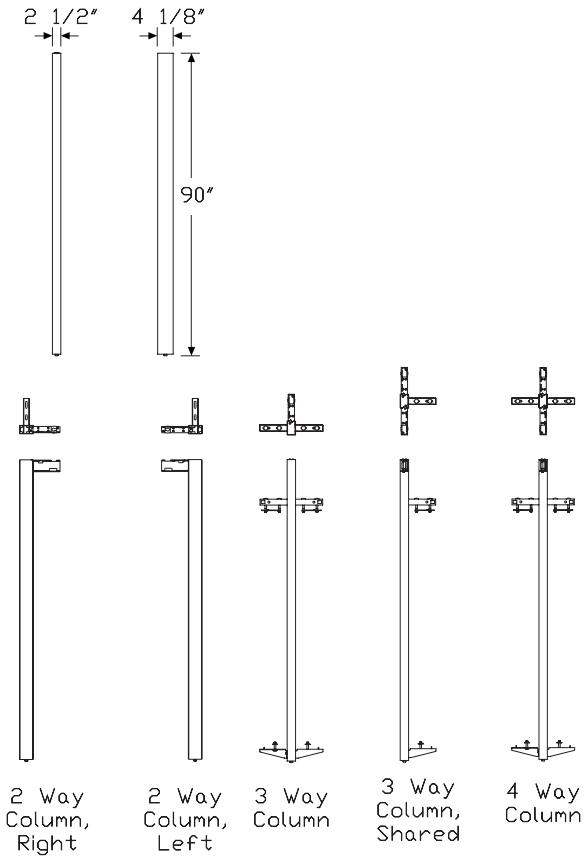

Specification Information

Step 1.

MN300.

Step 2. Column Configuration

2L	2-way, column left
2R	2-way, column right
3S	3-way column
3P	3-way, shared performance wall column
4W	4-way column

Step 3. Column Engagement

For 2-way, column left (2L), 2-way, column right (2R), or 3-way, shared performance wall column (3P)

N	no engagement
Y	engagement

For 3-way column (3S)

B	both left and right engagement
L	left engagement
N	no engagement
R	right engagement

For 4-way column (4W)

B	both left and right engagement
E	one side engagement
N	no engagement

Prices for Steps 1-3.

		B	E	L	N	R	Y
MN300.	**2L**	—	—	—	$1065	—	1065
	2R	—	—	—	$1065	—	1065
	3S	$1154	—	1154	1154	1154	—
	3P	—	—	—	$1154	—	1154
	4W	$1233	1233	—	1233	—	—

Step 4. Column and Spanner Finish

8Q	folkstone grey	+$0
91	white	+$0
98	studio white	+$0
BK	black	+$0
G1	graphite	+$0
MS	metallic silver	+$0
SNA	satin aluminum	+$30
SNB	satin bronze	+$30
SNC	satin carbon	+$30

Spanner MN400.

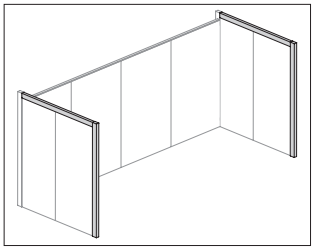

Product Information

Description

These extruded steel horizontal components connect to performance wall structure at a 90° angle to support the performance wall with return spanner or to connect 2 performance walls.

Notes

When specified as a return spanner (R), a vertical support column and all hardware and bracketry to connect to the performance wall column (MN300.) are included.

Return spanner (R) requires spanner zone structure (MN500.) and cladding (MN510.) or wood slat (MN520.) or perforated metal (MN560.).

When specified as a column spanner (P), all hardware and bracketry to connect the 2 performance wall columns (MN300.) is included. When column spanner is specified with an intermediate open door column (OD), glass door column (GG), or middle column (HO), the vertical support column is included.

When specified as an intermediate spanner (W), all hardware and bracketry to connect to the performance wall structure (MN200.) is included.

Order wall fasteners (X1192.) and toggle wall strip anchors (X1191.) separately.

Dimensions

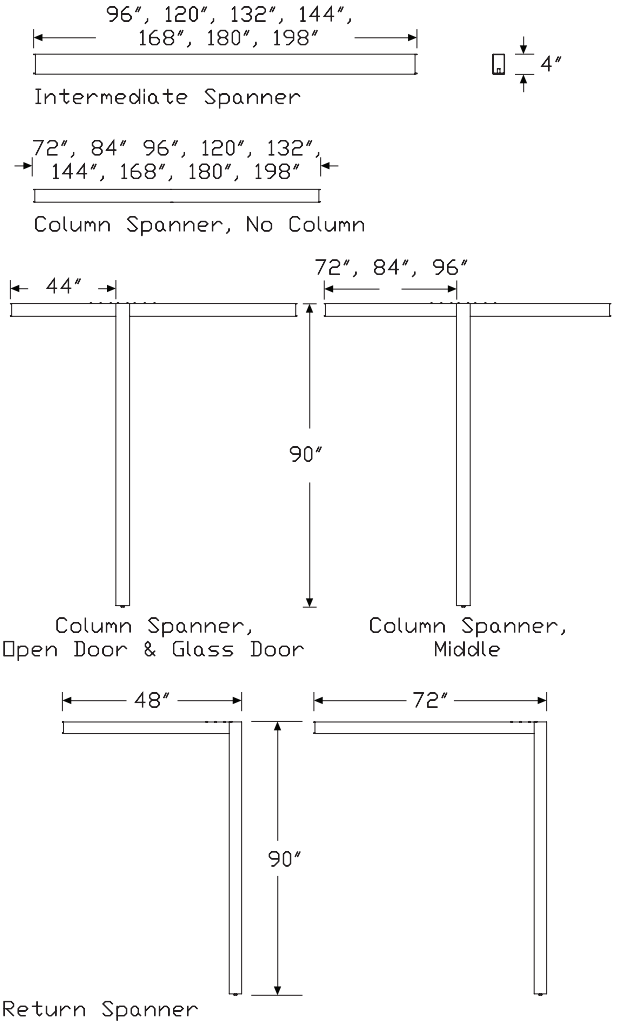

Specification Information

Step 1.

MN400.

Step 2. Type

P column spanner
R return spanner
W intermediate spanner

Step 3. Wall Start

For return spanner (R) or intermediate spanner (W)

NWS no wall start

For column spanner (P)

NWS no wall start
YWS wall start

Step 4. Length

For return spanner (R) with no wall start (NWS)

04 4′ long
06 6′ long

For column spanner (P) with no wall start (NWS) or wall start (YWS)

06 6′ long
07 7′ long
08 8′ long
10 10′ long
11 11′ long
12 12′ long
14 14′ long
15 15′ long
16 16′ long

For intermediate spanner (W) with no wall start (NWS)

08 8′ long
10 10′ long
11 11′ long
12 12′ long
14 14′ long
15 15′ long
16 16′ long

Step 5. Intermediate Support Column

For return spanner (R) with no wall start (NWS) with 4' long (04) or 6' long (06)

RP return

For column spanner (P) with no wall start (NWS) or wall start (YWS) with 6' long (06)

NP no column

For column spanner (P) with no wall start (NWS) or wall start (YWS) with 7' long (07), 8' long (08), 10' long (10), or 11' long (11)

GG glass door column
NP no column
OD open door column

For column spanner (P) with no wall start (NWS) or wall start (YWS) with 12' long (12), 14' long (14), 15' long (15), or 16' long (16)

GG glass door column
HO middle column
NP no column
OD open door column

For intermediate spanner (W) with no wall start (NWS) with 8' long (08), 10' long (10), 11' long (11), 12' long (12), 14' long (14), 15' long (15), or 16' long (16)

NP no column

Step 6. Spanner Engagement with Infill

For column spanner (P) or return spanner (R) with no wall start (NWS) or wall start (YWS)

NBE no spanner engagement

Step 7. Column Engagement with Infill

For return spanner (R) with no wall start (NWS) with return (RP)

NPE no column engagement
YPE column engagement

For column spanner (P) with no wall start (NWS) with glass door column (GG), middle column (HO), or open door column (OD)

NPE no column engagement
YPE column engagement

For column spanner (P) with wall start (YWS) with glass door column (GG), middle column (HO), or open door column (OD)

YPE column engagement

Prices for Steps 1-7.

		04RPNBENPE	04RPNBEYPE	**06NPNBE**	06RPNBENPE	06RPNBEYPE	07GGNBENPE
MN400.P	**NWS**	—	—	$747	—	—	1852
	YWS	—	—	$1766	—	—	—
R	**NWS**	$1311	1311	—	1398	1398	—

		07GGNBEYPE	**07NPNBE**	07ODNBENPE	07ODNBEYPE	08GGNBENPE	08GGNBEYPE
MN400.P	**NWS**	$1852	783	1852	1852	1868	1868
	YWS	$2869	1804	—	2869	—	2889

		08NP	**08NPNBE**	08ODNBENPE	08ODNBEYPE	10GGNBENPE	10GGNBEYPE
MN400.P	**NWS**	—	$800	1868	1868	2821	2821
	YWS	—	$1819	—	2889	—	3841
W	**NWS**	$1713	—	—	—	—	—

		10NP	**10NPNBE**	10ODNBENPE	10ODNBEYPE	11GGNBENPE	11GGNBEYPE
MN400.P	**NWS**	—	$1753	2821	2821	2857	2857
	YWS	—	$2771	—	3841	—	3878
W	**NWS**	$2123	—	—	—	—	—

		11NP	**11NPNBE**	11ODNBENPE	11ODNBEYPE	12GGNBENPE	12GGNBEYPE
MN400.P	**NWS**	—	$1788	2857	2857	2895	2895
	YWS	—	$2808	—	3878	—	3913
W	**NWS**	$2205	—	—	—	—	—

		12HONBENPE	12HONBEYPE	**12NP**	**12NPNBE**	12ODNBENPE	12ODNBEYPE
MN400.P	**NWS**	$2348	2348	—	1826	2895	2895
	YWS	—	$3367	—	2845	—	3913
W	**NWS**	—	—	$2291	—	—	—

		14GGNBENPE	14GGNBEYPE	14HONBENPE	14HONBEYPE	**14NP**	**14NPNBE**
MN400.P	**NWS**	$2931	2931	2423	2423	—	1863
	YWS	—	$3951	—	2706	—	2884
W	**NWS**	—	—	—	—	$2375	—

		14ODNBENPE	14ODNBEYPE	15GGNBENPE	15GGNBEYPE	15HONBENPE	15HONBEYPE
MN400.P	**NWS**	$2198	2198	2970	2970	2461	2461
	YWS	—	$3951	—	3988	—	3442

		15NP	**15NPNBE**	15ODNBENPE	15ODNBEYPE	16GGNBENPE	16GGNBEYPE
MN400.P	**NWS**	—	$1901	2970	2970	3006	3006
	YWS	—	$2920	—	3988	—	4024
W	**NWS**	$2462	—	—	—	—	—

		16HONBENPE	16HONBEYPE	**16NP**	**16NPNBE**	16ODNBENPE	16ODNBEYPE
MN400.P	**NWS**	$1761	1761	—	1937	3006	3006
	YWS	—	$2781	—	2955	—	4024
W	**NWS**	—	—	$2544	—	—	—

Step 8. Column and Spanner Finish

8Q	folkstone grey	+$0
91	white	+$0
98	studio white	+$0
BK	black	+$0
G1	graphite	+$0
MS	metallic silver	+$0
SNA	satin aluminum	+$30
SNB	satin bronze	+$30
SNC	satin carbon	+$30

Toggle Wall Strip Anchor X1191.

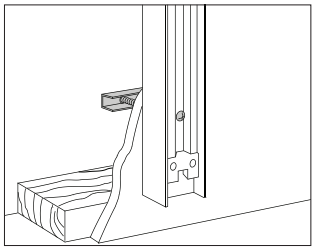

Product Information

Description

This anchor provides extra support for a wall hanger strip. Package contains 100.

Notes

Recommended for use in all drywall installations. Use with wall fastener (X1192.3).

Dimensions

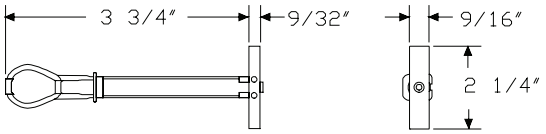

Specification Information

Step 1.

X1191.	$541

Wall Fastener X1192.

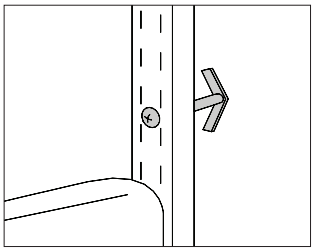

Product Information

Description

This black pan head fastener attaches a wall strip to a wall. Package contains 100.

Notes

Specify fastener based on wall construction:

- 1 1/2"-long #10 pan head sheet metal screw (X1192.1) fastens into anchors in cement blocks, poured walls, and brick
- 3"-long #10 pan head sheet metal screw (X1192.2) fastens into studs or TC toggles in drywall
- 3"-long #10 pan head machine screw (X1192.3) fastens into toggle wall strip anchor (X1191.) or wing toggle in drywall.

For drywall applications using X1192.3 wall fasteners, toggle wall strip anchors (X1191.) or equivalent fasteners are recommended; order separately.

Specification Information

Step 1.

X1192.

Step 2. Size

1	no. 10, 1 1/2" sheet metal screw
2	no. 10, 3" sheet metal screw
3	no. 10, 3" machine screw

Prices for Steps 1-2.

X1192.	**1**	$48
	2	$48
	3	$82

Performance Wall Cladding MN210.

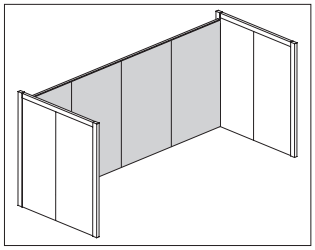

Product Information

Description

This cladding attaches to one side of the performance wall structure and extends to the floor, concealing the structure. Surface options are tackable fabric, laminate, or markerboard. Cladding is UL Listed and NFPA classified. Hardware and backer rails included.

Notes

Specify length of cladding to match length of performance wall structure.

When specifying cladding with light switch (RL, LL), cladding comes with cutouts for light switch. Requires use of light switch that comes with linear light (MN100.) or a field supplied light switch. Order linear light separately.

When specifying cladding with lite rail mounting (YR), cladding comes with cutouts for mounting lite rail. Order lite rail (MN920.) separately.

When specifying cladding with monitor mount (YM), cladding comes with cutouts for mounting media components (MN910.) and media structure (MN915.), ordered separately.

When specifying cladding with power cutouts (22, 32, 33, 42, 44), cladding comes with cutouts for power access. Order power components separately.

For tackable fabric (F), fabric direction is vertical.

Fabric cladding accepts Customer's Own Material (COM). Yardage is estimated for vertical direction, 54"- and 66"-wide fabrics. All cladding panels are 86" high.

COM yardage requirements:

- 2 cladding panel sections (performance walls 6'-8' long)—5.7 yards
- 3 cladding panel sections (performance walls 9'-12' long)—8.55 yards
- 4 cladding panel sections (performance walls 13'-16' long)—11.4 yards

Order optional products separately:

- Lite rail (MN920.)
- Media structure (MN915.)
- Media components (MN910.)
- Cutout cover (MN151.)
- Electrical components

Service part required for 8' performance walls that accommodate a monitor mount and a light switch within the same wall, whether the switch and monitor are on the same side or opposite sides of the wall. Order service part U1BN5C0, Media Kit 8 ft w Light Switch, through Service Parts.

Dimensions

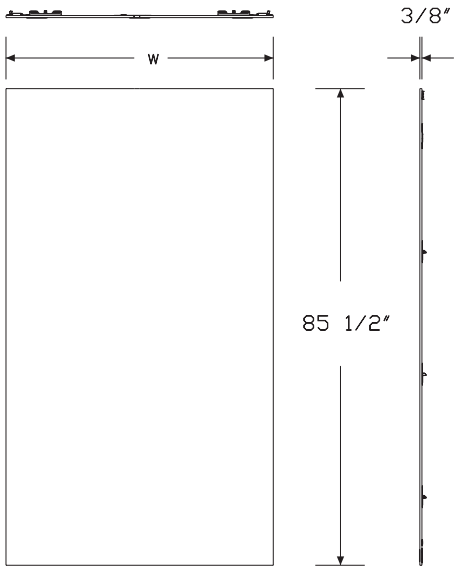

Performance Wall Cladding

continued

Specification Information

Step 1.

MN210.

Step 2. Performance Wall Length

06	6′ long
07	7′ long
08	8′ long
09	9′ long
10	10′ long
11	11′ long
12	12′ long
13	13′ long
14	14′ long
15	15′ long
16	16′ long

Step 3. Cladding Material

F	fabric
L	high-pressure laminate/thermoplastic edge
M	marker board

Step 4. Light Switch

LL	light switch on left side of wall
NL	no light switch
RL	light switch on right side of wall

Step 5. Lite Rail Mounting

NR	no lite rail
YR	lite rail

Step 6. Monitor Mount

NM	no monitor mount
YM	monitor mount

Step 7. Power Access (Cutout)

NP	no power access
YP	power access

Step 8. Number of Power Cutouts

For no power access (NP)

NP	no power cutout

For 6' long (06), 7' long (07), or 8' long (08) with power access (YP)

22	2 duplex cutout

For 9' long (09), 10' long (10), 11' long (11), or 12' long (12) with power access (YP)

32	2 duplex cutout
33	3 duplex cutout

For 13' long (13), 14' long (14), 15' long (15), or 16' long (16) with power access (YP)

42	2 duplex cutout
44	4 duplex cutout

Prices for Steps 1-8.

		LLNRNMNPNP	LLNRNMYP22	LLNRNMYP32	LLNRNMYP33	LLNRNMYP42	LLNRNMYP44
MN210.06	**F**	$1161	1240	—	—	—	—
	L	$1777	1815	—	—	—	—
	M	$2280	2321	—	—	—	—
07	**F**	$1276	1356	—	—	—	—
	L	$1956	1997	—	—	—	—
	M	$2355	2395	—	—	—	—
08	**F**	$1320	1400	—	—	—	—
	L	$2212	2253	—	—	—	—
	M	$2430	2468	—	—	—	—
09	**F**	$1721	—	1759	1759	—	—
	L	$3087	—	3124	3124	—	—
	M	$3390	—	3431	3431	—	—
10	**F**	$1797	—	1838	1838	—	—
	L	$3028	—	3067	3067	—	—
	M	$3325	—	3366	3366	—	—
11	**F**	$1836	—	1874	1874	—	—
	L	$3091	—	3130	3130	—	—
	M	$3395	—	3435	3435	—	—
12	**F**	$1861	—	1901	1901	—	—
	L	$3295	—	3334	3334	—	—
	M	$3620	—	3660	3660	—	—
13	**F**	$1982	—	—	—	2024	2024
	L	$3632	—	—	—	3672	3672
	M	$3990	—	—	—	4030	4030
14	**F**	$2103	—	—	—	2146	2146
	L	$3856	—	—	—	3898	3898
	M	$4236	—	—	—	4276	4276
15	**F**	$2226	—	—	—	2265	2265
	L	$4080	—	—	—	4118	4118
	M	$4483	—	—	—	4523	4523
16	**F**	$2351	—	—	—	2391	2391
	L	$4677	—	—	—	4717	4717
	M	$5070	—	—	—	5111	5111

		LLNRYMNPNP	LLNRYMYP22	LLNRYMYP32	LLNRYMYP33	LLNRYMYP42	LLNRYMYP44
MN210.06	**F**	$1201	1240	—	—	—	—
	L	$1815	1856	—	—	—	—
	M	$2321	2359	—	—	—	—
07	**F**	$1319	1356	—	—	—	—
	L	$1997	2037	—	—	—	—
	M	$2395	2435	—	—	—	—
08	**F**	$1357	1400	—	—	—	—
	L	$2253	2290	—	—	—	—
	M	$2468	2507	—	—	—	—
09	**F**	$1759	—	1798	1798	—	—
	L	$3124	—	3167	3167	—	—
	M	$3431	—	3471	3471	—	—
10	**F**	$1838	—	1878	1878	—	—
	L	$3067	—	3108	3108	—	—
	M	$3366	—	3405	3405	—	—
11	**F**	$1874	—	1917	1917	—	—
	L	$3130	—	3171	3171	—	—
	M	$3435	—	3476	3476	—	—
12	**F**	$1901	—	1942	1942	—	—
	L	$3334	—	3375	3375	—	—
	M	$3660	—	3699	3699	—	—
13	**F**	$2024	—	—	—	2063	2063
	L	$3672	—	—	—	3711	3711
	M	$4030	—	—	—	4070	4070
14	**F**	$2146	—	—	—	2184	2184
	L	$3898	—	—	—	3935	3935
	M	$4276	—	—	—	4318	4318
15	**F**	$2265	—	—	—	2306	2306
	L	$4118	—	—	—	4159	4159
	M	$4523	—	—	—	4563	4563
16	**F**	$2391	—	—	—	2432	2432
	L	$4717	—	—	—	4757	4757
	M	$5111	—	—	—	5150	5150

		LLYRNMNPNP	LLYRNMYP22	LLYRNMYP32	LLYRNMYP33	LLYRNMYP42	LLYRNMYP44
MN210.06	**F**	$1201	1240	—	—	—	—
	L	$1815	1856	—	—	—	—
	M	$2321	2359	—	—	—	—
07	**F**	$1319	1356	—	—	—	—
	L	$1997	2037	—	—	—	—
	M	$2395	2435	—	—	—	—
08	**F**	$1357	1400	—	—	—	—
	L	$2253	2290	—	—	—	—
	M	$2468	2507	—	—	—	—
09	**F**	$1759	—	1798	1798	—	—
	L	$3124	—	3167	3167	—	—
	M	$3431	—	3471	3471	—	—
10	**F**	$1838	—	1878	1878	—	—
	L	$3067	—	3108	3108	—	—
	M	$3366	—	3405	3405	—	—
11	**F**	$1874	—	1917	1917	—	—
	L	$3130	—	3171	3171	—	—
	M	$3435	—	3476	3476	—	—
12	**F**	$1901	—	1942	1942	—	—
	L	$3334	—	3375	3375	—	—
	M	$3660	—	3699	3699	—	—
13	**F**	$2024	—	—	—	2063	2063
	L	$3672	—	—	—	3711	3711
	M	$4030	—	—	—	4070	4070
14	**F**	$2146	—	—	—	2184	2184
	L	$3898	—	—	—	3935	3935
	M	$4276	—	—	—	4318	4318
15	**F**	$2265	—	—	—	2306	2306
	L	$4118	—	—	—	4159	4159
	M	$4523	—	—	—	4563	4563
16	**F**	$2391	—	—	—	2432	2432
	L	$4717	—	—	—	4757	4757
	M	$5111	—	—	—	5150	5150

		LLYRYMNPNP	LLYRYMYP22	LLYRYMYP32	LLYRYMYP33	LLYRYMYP42	LLYRYMYP44
MN210.06	**F**	$1240	1280	—	—	—	—
	L	$1856	1894	—	—	—	—
	M	$2359	2399	—	—	—	—
07	**F**	$1356	1397	—	—	—	—
	L	$2037	2076	—	—	—	—
	M	$2435	2474	—	—	—	—
08	**F**	$1400	1440	—	—	—	—
	L	$2290	2333	—	—	—	—
	M	$2507	2549	—	—	—	—
09	**F**	$1798	—	1842	1842	—	—
	L	$3167	—	3207	3207	—	—
	M	$3471	—	3512	3512	—	—
10	**F**	$1878	—	1919	1919	—	—
	L	$3108	—	3148	3148	—	—
	M	$3405	—	3444	3444	—	—
11	**F**	$1917	—	1955	1955	—	—
	L	$3171	—	3211	3211	—	—
	M	$3476	—	3515	3515	—	—
12	**F**	$1942	—	1981	1981	—	—
	L	$3375	—	3413	3413	—	—
	M	$3699	—	3739	3739	—	—

13	**F**	$2063	—	—	—	2101	2101
	L	$3711	—	—	—	3751	3751
	M	$4070	—	—	—	4110	4110
14	**F**	$2184	—	—	—	2225	2225
	L	$3935	—	—	—	3978	3978
	M	$4318	—	—	—	4357	4357
15	**F**	$2306	—	—	—	2345	2345
	L	$4159	—	—	—	4201	4201
	M	$4563	—	—	—	4604	4604
16	**F**	$2432	—	—	—	2470	2470
	L	$4757	—	—	—	4797	4797
	M	$5150	—	—	—	5189	5189

		NLNRNMNPNP	NLNRNMYP22	NLNRNMYP32	NLNRNMYP33	NLNRNMYP42	NLNRNMYP44
MN210.06	**F**	$1120	1161	—	—	—	—
	L	$1735	1777	—	—	—	—
	M	$2240	2280	—	—	—	—
07	**F**	$1237	1276	—	—	—	—
	L	$1918	1956	—	—	—	—
	M	$2314	2355	—	—	—	—
08	**F**	$1278	1320	—	—	—	—
	L	$2170	2212	—	—	—	—
	M	$2387	2430	—	—	—	—
09	**F**	$1680	—	1721	1721	—	—
	L	$3047	—	3087	3087	—	—
	M	$3351	—	3390	3390	—	—
10	**F**	$1758	—	1797	1797	—	—
	L	$2988	—	3028	3028	—	—
	M	$3285	—	3325	3325	—	—
11	**F**	$1795	—	1836	1836	—	—
	L	$3050	—	3091	3091	—	—
	M	$3356	—	3395	3395	—	—
12	**F**	$1821	—	1861	1861	—	—
	L	$3254	—	3295	3295	—	—
	M	$3580	—	3620	3620	—	—
13	**F**	$1943	—	—	—	1982	1982
	L	$3591	—	—	—	3632	3632
	M	$3950	—	—	—	3990	3990
14	**F**	$2064	—	—	—	2103	2103
	L	$3816	—	—	—	3856	3856
	M	$4197	—	—	—	4236	4236
15	**F**	$2187	—	—	—	2226	2226
	L	$4040	—	—	—	4080	4080
	M	$4445	—	—	—	4483	4483
16	**F**	$2310	—	—	—	2351	2351
	L	$4638	—	—	—	4677	4677
	M	$5031	—	—	—	5070	5070

		NLNRYMNPNP	NLNRYMYP22	NLNRYMYP32	NLNRYMYP33	NLNRYMYP42	NLNRYMYP44
MN210.06	**F**	$1161	1201	—	—	—	—
	L	$1777	1815	—	—	—	—
	M	$2280	2321	—	—	—	—
07	**F**	$1276	1319	—	—	—	—
	L	$1956	1997	—	—	—	—
	M	$2355	2395	—	—	—	—
08	**F**	$1320	1357	—	—	—	—
	L	$2212	2253	—	—	—	—
	M	$2430	2468	—	—	—	—
09	**F**	$1721	—	1759	1759	—	—
	L	$3087	—	3124	3124	—	—
	M	$3390	—	3431	3431	—	—
10	**F**	$1797	—	1838	1838	—	—
	L	$3028	—	3067	3067	—	—
	M	$3325	—	3366	3366	—	—
11	**F**	$1836	—	1874	1874	—	—
	L	$3091	—	3130	3130	—	—
	M	$3395	—	3435	3435	—	—
12	**F**	$1861	—	1901	1901	—	—
	L	$3295	—	3334	3334	—	—
	M	$3620	—	3660	3660	—	—
13	**F**	$1982	—	—	—	2024	2024
	L	$3632	—	—	—	3672	3672
	M	$3990	—	—	—	4030	4030
14	**F**	$2103	—	—	—	2146	2146
	L	$3856	—	—	—	3898	3898
	M	$4236	—	—	—	4276	4276
15	**F**	$2226	—	—	—	2265	2265
	L	$4080	—	—	—	4118	4118
	M	$4483	—	—	—	4523	4523
16	**F**	$2351	—	—	—	2391	2391
	L	$4677	—	—	—	4717	4717
	M	$5070	—	—	—	5111	5111

		NLYRNMNPNP	NLYRNMYP22	NLYRNMYP32	NLYRNMYP33	NLYRNMYP42	NLYRNMYP44
MN210.06	**F**	$1120	1161	—	—	—	—
	L	$1777	1815	—	—	—	—
	M	$2280	2321	—	—	—	—
07	**F**	$1237	1276	—	—	—	—
	L	$1956	1997	—	—	—	—
	M	$2355	2395	—	—	—	—
08	**F**	$1278	1320	—	—	—	—
	L	$2212	2253	—	—	—	—
	M	$2430	2468	—	—	—	—

09	**F**	$1721	—	1759	1759	—	—
	L	$3087	—	3124	3124	—	—
	M	$3390	—	3431	3431	—	—
10	**F**	$1797	—	1838	1838	—	—
	L	$3028	—	3067	3067	—	—
	M	$3325	—	3366	3366	—	—
11	**F**	$1836	—	1874	1874	—	—
	L	$3091	—	3130	3130	—	—
	M	$3395	—	3435	3435	—	—
12	**F**	$1861	—	1901	1901	—	—
	L	$3295	—	3334	3334	—	—
	M	$3620	—	3660	3660	—	—
13	**F**	$1982	—	—	—	2024	2024
	L	$3632	—	—	—	3672	3672
	M	$3990	—	—	—	4030	4030
14	**F**	$2103	—	—	—	2146	2146
	L	$3856	—	—	—	3898	3898
	M	$4236	—	—	—	4276	4276
15	**F**	$2226	—	—	—	2265	2265
	L	$4080	—	—	—	4118	4118
	M	$4483	—	—	—	4523	4523
16	**F**	$2351	—	—	—	2391	2391
	L	$4677	—	—	—	4717	4717
	M	$5070	—	—	—	5111	5111

		NLYRYMNPNP	NLYRYMYP22	NLYRYMYP32	NLYRYMYP33	NLYRYMYP42	NLYRYMYP44
MN210.06	**F**	$1201	1240	—	—	—	—
	L	$1815	1856	—	—	—	—
	M	$2321	2359	—	—	—	—
07	**F**	$1319	1356	—	—	—	—
	L	$1997	2037	—	—	—	—
	M	$2395	2435	—	—	—	—
08	**F**	$1357	1400	—	—	—	—
	L	$2253	2290	—	—	—	—
	M	$2468	2507	—	—	—	—
09	**F**	$1759	—	1798	1798	—	—
	L	$3124	—	3167	3167	—	—
	M	$3431	—	3471	3471	—	—
10	**F**	$1838	—	1878	1878	—	—
	L	$3067	—	3108	3108	—	—
	M	$3366	—	3405	3405	—	—
11	**F**	$1874	—	1917	1917	—	—
	L	$3130	—	3171	3171	—	—
	M	$3435	—	3476	3476	—	—
12	**F**	$1901	—	1942	1942	—	—
	L	$3334	—	3375	3375	—	—
	M	$3660	—	3699	3699	—	—
13	**F**	$2024	—	—	—	2063	2063
	L	$3672	—	—	—	3711	3711
	M	$4030	—	—	—	4070	4070
14	**F**	$2146	—	—	—	2184	2184
	L	$3898	—	—	—	3935	3935
	M	$4276	—	—	—	4318	4318
15	**F**	$2265	—	—	—	2306	2306
	L	$4118	—	—	—	4159	4159
	M	$4523	—	—	—	4563	4563
16	**F**	$2391	—	—	—	2432	2432
	L	$4717	—	—	—	4757	4757
	M	$5111	—	—	—	5150	5150

		RLNRNMNPNP	RLNRNMYP22	RLNRNMYP32	RLNRNMYP33	RLNRNMYP42	RLNRNMYP44
MN210.06	**F**	$1161	1201	—	—	—	—
	L	$1777	1815	—	—	—	—
	M	$2280	2321	—	—	—	—
07	**F**	$1276	1319	—	—	—	—
	L	$1956	1997	—	—	—	—
	M	$2355	2395	—	—	—	—
08	**F**	$1320	1357	—	—	—	—
	L	$2212	2253	—	—	—	—
	M	$2430	2468	—	—	—	—
09	**F**	$1721	—	1759	1759	—	—
	L	$3087	—	3124	3124	—	—
	M	$3390	—	3431	3431	—	—
10	**F**	$1797	—	1838	1838	—	—
	L	$3028	—	3067	3067	—	—
	M	$3325	—	3366	3366	—	—
11	**F**	$1836	—	1874	1874	—	—
	L	$3091	—	3130	3130	—	—
	M	$3395	—	3435	3435	—	—
12	**F**	$1861	—	1901	1901	—	—
	L	$3295	—	3334	3334	—	—
	M	$3620	—	3660	3660	—	—
13	**F**	$1982	—	—	—	2024	2024
	L	$3632	—	—	—	3672	3672
	M	$3990	—	—	—	4030	4030
14	**F**	$2103	—	—	—	2146	2146
	L	$3856	—	—	—	3898	3898
	M	$4236	—	—	—	4276	4276
15	**F**	$2226	—	—	—	2265	2265
	L	$4080	—	—	—	4118	4118
	M	$4483	—	—	—	4523	4523
16	**F**	$2351	—	—	—	2391	2391
	L	$4677	—	—	—	4717	4717
	M	$5070	—	—	—	5111	5111

		RLNRYMNPNP	RLNRYMYP22	RLNRYMYP32	RLNRYMYP33	RLNRYMYP42	RLNRYMYP44
MN210.06	**F**	$1201	1240	—	—	—	—
	L	$1777	1815	—	—	—	—
	M	$2321	2359	—	—	—	—
07	**F**	$1319	1356	—	—	—	—
	L	$1956	1997	—	—	—	—
	M	$2395	2435	—	—	—	—
08	**F**	$1357	1400	—	—	—	—
	L	$2212	2253	—	—	—	—
	M	$2468	2507	—	—	—	—
09	**F**	$1759	—	1798	1798	—	—
	L	$3124	—	3167	3167	—	—
	M	$3431	—	3471	3471	—	—
10	**F**	$1838	—	1878	1878	—	—
	L	$3067	—	3108	3108	—	—
	M	$3366	—	3405	3405	—	—
11	**F**	$1874	—	1917	1917	—	—
	L	$3130	—	3171	3171	—	—
	M	$3435	—	3476	3476	—	—
12	**F**	$1901	—	1942	1942	—	—
	L	$3334	—	3375	3375	—	—
	M	$3660	—	3699	3699	—	—
13	**F**	$2024	—	—	—	2063	2063
	L	$3672	—	—	—	3711	3711
	M	$4030	—	—	—	4070	4070
14	**F**	$2146	—	—	—	2184	2184
	L	$3898	—	—	—	3935	3935
	M	$4276	—	—	—	4318	4318
15	**F**	$2265	—	—	—	2306	2306
	L	$4118	—	—	—	4159	4159
	M	$4523	—	—	—	4563	4563
16	**F**	$2391	—	—	—	2432	2432
	L	$4717	—	—	—	4757	4757
	M	$5111	—	—	—	5150	5150

		RLYRNMNPNP	RLYRNMYP22	RLYRNMYP32	RLYRNMYP33	RLYRNMYP42	RLYRNMYP44
MN210.06	**F**	$1201	1240	—	—	—	—
	L	$1815	1856	—	—	—	—
	M	$2321	2280	—	—	—	—
07	**F**	$1319	1356	—	—	—	—
	L	$1997	2037	—	—	—	—
	M	$2395	2355	—	—	—	—
08	**F**	$1357	1400	—	—	—	—
	L	$2253	2290	—	—	—	—
	M	$2468	2430	—	—	—	—
09	**F**	$1759	—	1798	1798	—	—
	L	$3124	—	3167	3167	—	—
	M	$3431	—	3471	3471	—	—
10	**F**	$1838	—	1878	1878	—	—
	L	$3067	—	3108	3108	—	—
	M	$3366	—	3405	3405	—	—
11	**F**	$1874	—	1917	1917	—	—
	L	$3130	—	3171	3171	—	—
	M	$3435	—	3476	3476	—	—
12	**F**	$1901	—	1942	1942	—	—
	L	$3334	—	3375	3375	—	—
	M	$3660	—	3699	3699	—	—
13	**F**	$2024	—	—	—	2063	2063
	L	$3672	—	—	—	3711	3711
	M	$4030	—	—	—	4070	4070
14	**F**	$2146	—	—	—	2184	2184
	L	$3898	—	—	—	3935	3935
	M	$4276	—	—	—	4318	4318
15	**F**	$2265	—	—	—	2306	2306
	L	$4118	—	—	—	4159	4159
	M	$4523	—	—	—	4563	4563
16	**F**	$2391	—	—	—	2432	2432
	L	$4717	—	—	—	4757	4757
	M	$5111	—	—	—	5150	5150

		RLYRYMNPNP	RLYRYMYP22	RLYRYMYP32	RLYRYMYP33	RLYRYMYP42	RLYRYMYP44
MN210.06	**F**	$1240	1280	—	—	—	—
	L	$1856	1894	—	—	—	—
	M	$2321	2399	—	—	—	—
07	**F**	$1356	1397	—	—	—	—
	L	$2037	2076	—	—	—	—
	M	$2395	2474	—	—	—	—
08	**F**	$1400	1440	—	—	—	—
	L	$2290	2333	—	—	—	—
	M	$2468	2549	—	—	—	—
09	**F**	$1798	—	1842	1842	—	—
	L	$3167	—	3207	3207	—	—
	M	$3471	—	3512	3512	—	—
10	**F**	$1878	—	1919	1919	—	—
	L	$3108	—	3148	3148	—	—
	M	$3405	—	3444	3444	—	—
11	**F**	$1917	—	1955	1955	—	—
	L	$3171	—	3211	3211	—	—
	M	$3476	—	3515	3515	—	—
12	**F**	$1942	—	1981	1981	—	—
	L	$3375	—	3413	3413	—	—
	M	$3699	—	3739	3739	—	—

13	**F**	$2063	—	—	—	2101	2101
	L	$3711	—	—	—	3751	3751
	M	$4070	—	—	—	4110	4110
14	**F**	$2184	—	—	—	2225	2225
	L	$3935	—	—	—	3978	3978
	M	$4318	—	—	—	4357	4357
15	**F**	$2306	—	—	—	2345	2345
	L	$4159	—	—	—	4201	4201
	M	$4563	—	—	—	4604	4604
16	**F**	$2432	—	—	—	2470	2470
	L	$4757	—	—	—	4797	4797
	M	$5150	—	—	—	5189	5189

Step 9. Cladding Finish

For 6' long (06), 7' long (07), or 8' long (08) with fabric (F)	
Price Category 1	+$0
Price Category 2	+$65
Price Category 3	+$146
Price Category 4	+$250
Price Category 5	+$413
Price Category B	+$257
Price Category C	+$350
Price Category D	+$442

For 9' long (09), 10' long (10), 11' long (11), or 12' long (12) with fabric (F)	
Price Category 1	+$0
Price Category 2	+$97
Price Category 3	+$220
Price Category 4	+$374
Price Category 5	+$619
Price Category B	+$385
Price Category C	+$526
Price Category D	+$662

For 13' long (13), 14' long (14), 15' long (15), or 16' long (16) with fabric (F)	
Price Category 1	+$0
Price Category 2	+$130
Price Category 3	+$293
Price Category 4	+$499
Price Category 5	+$826
Price Category B	+$514
Price Category C	+$701
Price Category D	+$883

For high-pressure laminate/thermoplastic edge (L)		
76	light brown walnut	+$0
8Q	folkstone grey	+$0
91	white	+$0
98	studio white	+$0
CL	cool grey neutral	+$0
HF	inner tone light	+$0
HM	natural maple	+$0
HP	light anigre	+$0
HX	aged cherry	+$0
LBA	clear on ash	+$0
LBB	oak on ash	+$0
LBC	walnut on ash	+$0
LBF	neutral twill	+$0
LBJ	graphite twill	+$0
LBN	classic linen	+$0
LBQ	white twill	+$0
LBR	phantom ecru	+$0
LBS	phantom cocoa	+$0
LBU	medium matte walnut	+$0
LBV	warm grey teak	+$0
LT	light tone	+$0
LU	soft white	+$0
WL	sandstone	+$0
WN	warm grey neutral	+$0

Step 10. Edge		
For high-pressure laminate/thermoplastic edge (L)		
76	light brown walnut	+$0
8Q	folkstone grey	+$0
91	white	+$0
98	studio white	+$0
BU	black umber	+$0
CL	cool grey neutral	+$0
HF	inner tone light	+$0
HM	natural maple	+$0
HP	light anigre	+$0
HX	aged cherry	+$0
LBA	clear on ash	+$0
LBB	oak on ash	+$0
LBC	walnut on ash	+$0
LBF	neutral twill	+$0
LBJ	graphite twill	+$0
LBN	classic linen	+$0
LBQ	white twill	+$0
LBR	phantom ecru	+$0
LBS	phantom cocoa	+$0
LBU	medium matte walnut	+$0
LBV	warm grey teak	+$0
LU	soft white	+$0
WL	sandstone	+$0

Step 11. Bezel Finish		
For monitor mount (YM) with power access (YP)		
3G	brownstone	+$0
8Q	folkstone grey	+$0
91	white	+$0
98	studio white	+$0
BK	black	+$0
CL	cool grey neutral	+$0
G1	graphite	+$0
WL	sandstone	+$0
WN	warm grey neutral	+$0

Spanner Zone Structure MN500.

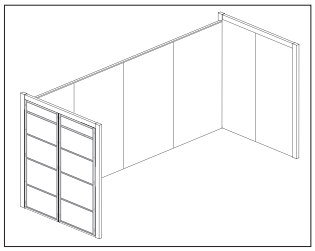

Product Information

Description

This steel frame holds cladding on both sides. Configuration options are full-length structure, structure with door column, and structure with middle column. Includes hardware and frame-to-frame connector kits.

Notes

Spanner zone structure is required when specifying spanner zone cladding (MN510.). Order cladding separately.

Spanner zone structure is required to be cladded for its entire length.

Spanner zone cannot support media components (MN910.), media structure (MN915.), or electrical components.

For appropriate planning applications, see Overlay™ planning guide.

Dimensions

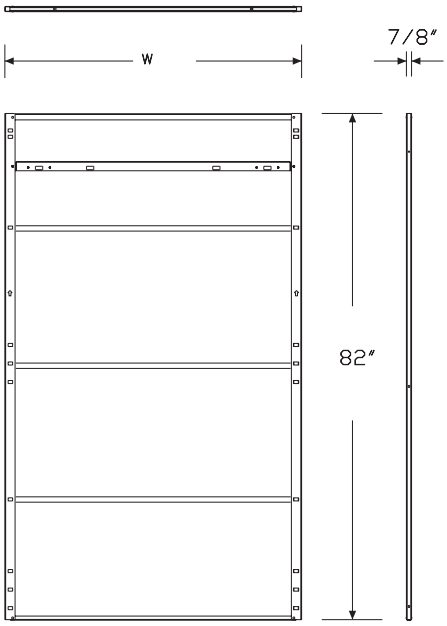

Specification Information

Step 1.

MN500.

Step 2. Spanner Length

04	4′ long
06	6′ long
07	7′ long
08	8′ long
10	10′ long
11	11′ long
12	12′ long
14	14′ long
15	15′ long
16	16′ long

Step 3. Configuration

For 4′ long (04) or 6′ long (06)

FL	full length structure

For 7′ long (07), 8′ long (08), 10′ long (10), or 11′ long (11)

DP	structure with door column
FL	full length structure

For 12′ long (12), 14′ long (14), 15′ long (15), or 16′ long (16)

DP	structure with door column
FL	full length structure
HO	structure with middle column

Prices for Steps 1-3.

	DP	FL	HO
MN500.04	—	$681	—
06	—	$1395	—
07	$681	1423	—
08	$854	1530	—
10	$1395	2144	—
11	$1611	2298	—
12	$1530	2454	1395
14	$2144	2606	1423
15	$2298	2762	1479
16	$2454	2915	1530

Spanner Zone Cladding MN510.

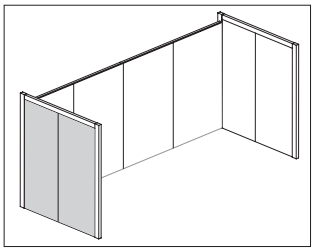

Product Information

Description

This cladding attaches to one side of the spanner zone structure and extends to the floor, concealing the structure. Surface options are tackable fabric, laminate, or markerboard. Cladding is UL Listed and NFPA classified. Hardware and backer rails included.

Notes

Specify length of cladding to match length of spanner zone structure.

When specifying cladding with lite rail mounting (YR), cladding comes with cutouts for mounting. Order lite rail (MN920.) separately.

When spanner zone structure and cladding are used with sliding glass door, lite rail cannot be used on the spanner zone cladding.

Spanner zone cannot support media components (MN910.), media structure (MN915.), or electrical components.

For tackable fabric (F), fabric direction is vertical.

Fabric cladding accepts Customer's Own Material (COM). Yardage is estimated for vertical direction, 54"- and 66"-wide fabrics. All cladding panels are 86" high.

COM yardage requirements:

- 1 cladding panel section (spanner return 4' wide)—2.85 yards
- 2 cladding panel sections (spanner zone 6'-8' long)—5.7 yards
- 3 cladding panel sections (spanner zone 10'-12' long)—8.55 yards
- 4 cladding panel sections (spanner zone 14'-16' long)—11.4 yards

Order optional products separately:

- Lite rail (MN920.)
- Light seal (MN930.)

Dimensions

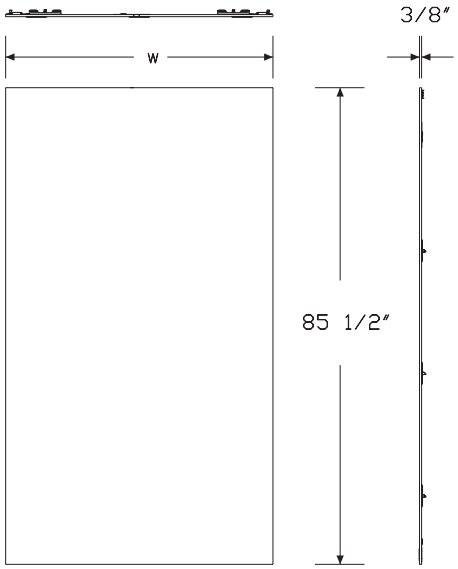

Specification Information

Step 1.

MN510.

Step 2. Spanner Length

04	4′ long
06	6′ long
07	7′ long
08	8′ long
10	10′ long
11	11′ long
12	12′ long
14	14′ long
15	15′ long
16	16′ long

Step 3. Cladding Material

F	fabric
L	high-pressure laminate/thermoplastic edge
M	marker board

Step 4. Configuration

For 4' long (04) or 6' long (06)

FL	full length cladding

For 7' long (07), 8' long (08), 10' long (10), or 11' long (11)

DP	cladding with door column
FL	full length cladding

For 12' long (12), 14' long (14), 15' long (15), or 16' long (16)

DP	cladding with door column
FL	full length cladding
HO	cladding with middle column

Step 5. Lite Rail Mounting

For 4' long (04) with full length cladding (FL)

NR	no lite rail

For 6' long (06) with full length cladding (FL)

NR	no lite rail
YR	lite rail

For 7' long (07) or 8' long (08) with cladding with door column (DP)

NR	no lite rail

For 7' long (07) or 8' long (08) with full length cladding (FL)

NR	no lite rail
YR	lite rail

For 10' long (10), 11' long (11), 12' long (12), 14' long (14), 15' long (15), or 16' long (16) with cladding with door column (DP), full length cladding (FL), or cladding with middle column (HO)

NR	no lite rail
YR	lite rail

Prices for Steps 1-5.

		DPNR	DPYR	FLNR	FLYR	HONR	HOYR
MN510.04	**F**	—	—	$614	—	—	—
	L	—	—	$1058	—	—	—
	M	—	—	$1163	—	—	—
06	**F**	—	—	$1062	1104	—	—
	L	—	—	$1974	2015	—	—
	M	—	—	$2170	2212	—	—
07	**F**	$531	—	1141	1180	—	—
	L	$988	—	2045	2084	—	—
	M	$1090	—	2250	2287	—	—
08	**F**	$609	—	1220	1260	—	—
	L	$1056	—	2113	2153	—	—
	M	$1165	—	2325	2364	—	—
10	**F**	$1114	1154	1726	1763	—	—
	L	$1584	1626	2641	2680	—	—
	M	$1745	1785	2904	2943	—	—
11	**F**	$1208	1248	1818	1858	—	—
	L	$1901	1942	2958	2996	—	—
	M	$1745	1785	2904	2943	—	—
12	**F**	$1301	1342	1913	1951	1062	1104
	L	$2219	2259	3275	3314	1974	2015
	M	$2442	2482	3598	3640	2170	2212
14	**F**	$1395	1436	2003	2046	1141	1180
	L	$2536	2574	3590	3631	2045	2084
	M	$2789	2829	3949	3989	2250	2287
15	**F**	$1487	1528	2098	2139	1174	1216
	L	$2852	2892	3908	3948	2077	2120
	M	$3139	3178	4297	4337	2286	2327
16	**F**	$1581	1623	2193	2231	1220	1260
	L	$3169	3208	4223	4263	2113	2153
	M	$3488	3526	4645	4684	2325	2364

Step 6. Cladding Finish

For 4' long (04) with fabric (F)

Price Category 1	+$0
Price Category 2	+$32
Price Category 3	+$73
Price Category 4	+$125
Price Category 5	+$206
Price Category B	+$128
Price Category C	+$175
Price Category D	+$221

For 6' long (06), 7' long (07), or 8' long (08) with fabric (F)

Price Category 1	+$0
Price Category 2	+$65
Price Category 3	+$146
Price Category 4	+$250
Price Category 5	+$413
Price Category B	+$257
Price Category C	+$350
Price Category D	+$442

For 10' long (10), 11' long (11), or 12' long (12) with fabric (F)

Price Category 1	+$0
Price Category 2	+$97
Price Category 3	+$220
Price Category 4	+$374
Price Category 5	+$619
Price Category B	+$385
Price Category C	+$526
Price Category D	+$662

For 14' long (14), 15' long (15), or 16' long (16) with fabric (F)

Price Category 1	+$0
Price Category 2	+$130
Price Category 3	+$293
Price Category 4	+$499
Price Category 5	+$826
Price Category B	+$514
Price Category C	+$701
Price Category D	+$883

For high-pressure laminate/thermoplastic edge (L)

76	light brown walnut	+$0
8Q	folkstone grey	+$0
91	white	+$0
98	studio white	+$0
CL	cool grey neutral	+$0
HF	inner tone light	+$0
HM	natural maple	+$0
HP	light anigre	+$0
HX	aged cherry	+$0
LBA	clear on ash	+$0
LBB	oak on ash	+$0
LBC	walnut on ash	+$0
LBF	neutral twill	+$0
LBJ	graphite twill	+$0
LBN	classic linen	+$0
LBQ	white twill	+$0
LBR	phantom ecru	+$0
LBS	phantom cocoa	+$0
LBU	medium matte walnut	+$0
LBV	warm grey teak	+$0
LT	light tone	+$0
LU	soft white	+$0
WL	sandstone	+$0
WN	warm grey neutral	+$0

Step 7. Edge

For high-pressure laminate/thermoplastic edge (L)

HM	natural maple	+$0

Wood Slat MN520.

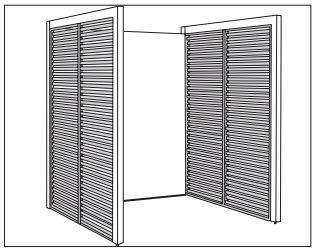

Product Information

Description

This wood slat connects to a column and a return spanner or column spanner. Hardwood slats vary in both grain character and color due to natural characteristics of wood. Mounting hardware included.

Notes

Wood slat is used in the spanner zone and can be specified for use with return spanner (MN400.R) or column spanner (MN400.P), ordered separately.

Specify wood slat by spanner length and spanner zone configuration.

For appropriate planning applications, see Overlay™ planning guide.

Dimensions

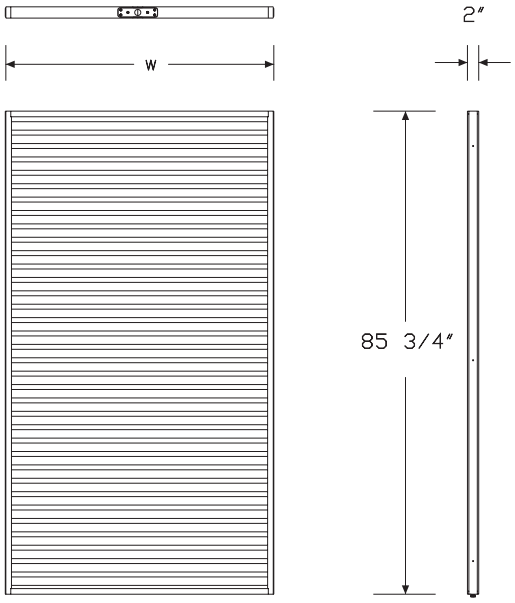

Specification Information

Step 1.

MN520.

Step 2. Spanner Length

04	4′ long
06	6′ long
07	7′ long
08	8′ long
10	10′ long
12	12′ long
16	16′ long

Step 3. Configuration

For 4′ long (04) or 6′ long (06)

FL	full length wood slat

For 7′ long (07)

DP	wood slat with door column

For 8′ long (08)

DP	wood slat with door column
FL	full length wood slat

For 10′ long (10)

DP	wood slat with door column

For 12′ long (12)

DP	wood slat with door column
HO	wood slat with middle column

For 16′ long (16)

HO	wood slat with middle column

Prices for Steps 1-3.

	DP	FL	HO
MN520.04	—	$9348	—
06	—	$16031	—
07	$7925	—	—
08	$9348	19624	—
10	$16031	—	—
12	$19624	—	16031
16	—	—	19624

Step 4. Finish

For 4' long (04) with full length wood slat (FL)

BHD	birch hardwood	+$0
WHD	walnut hardwood	+$1302

For 6' long (06) with full length wood slat (FL)

BHD	birch hardwood	+$0
WHD	walnut hardwood	+$2242

For 7' long (07) with wood slat with door column (DP)

BHD	birch hardwood	+$0
WHD	walnut hardwood	+$1110

For 8' long (08) with wood slat with door column (DP)

BHD	birch hardwood	+$0
WHD	walnut hardwood	+$1302

For 8' long (08) with full length wood slat (FL)

BHD	birch hardwood	+$0
WHD	walnut hardwood	+$2717

For 10' long (10) with wood slat with door column (DP)

BHD	birch hardwood	+$0
WHD	walnut hardwood	+$2242

For 12' long (12) with wood slat with door column (DP)

BHD	birch hardwood	+$0
WHD	walnut hardwood	+$2717

For 12' long (12) with wood slat with middle column (HO)

BHD	birch hardwood	+$0
WHD	walnut hardwood	+$2242

For 16' long (16) with wood slat with middle column (HO)

BHD	birch hardwood	+$0
WHD	walnut hardwood	+$2717

Glass Mount MN530.

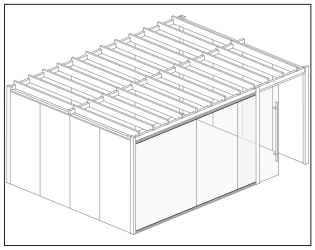

Product Information

Description

This mount attaches to the underside of a column spanner and is for use only with the column spanner. It includes a top channel, bottom channel, and all hardware and gaskets. Glass not included.

Notes

Glass mount is offered in 2 lengths. For spanner up to 8′ long, specify 8′ long glass mount (01). For spanner longer than 8′, specify 16′ long glass mount (02).

Glass mount is for use with a column spanner (MN400.P) only.

Glass must be supplied locally. This mount comes with extrusions and hardware only.

Glass installer necessary for installation.

For appropriate planning applications, see Overlay™ planning guide.

Dimensions

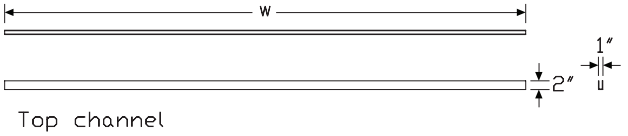

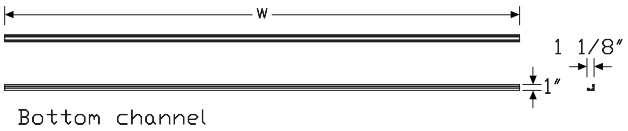

Specification Information

Step 1.

MN530.

Step 2. Glass Mount Length

01	8′ long glass mount
02	16′ long glass mount

Prices for Steps 1-2.

MN530.01		$2342
	02	$4096

Step 3. Finish

AN	anodized	+$0

Sliding Glass Door Hardware MN540.

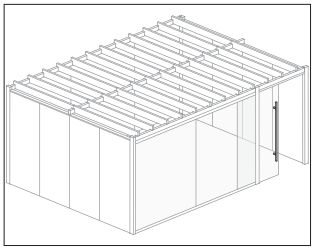

Product Information

Description

This hardware provides for the addition of a sliding glass door to a spanner with a glass door column. Package includes hardware, track, and shroud to conceal track. Door handle optional. Glass not included.

Notes

When sliding glass door is used with spanner zone structure and cladding, lite rail (MN920.) cannot be used on the spanner zone cladding.

Glass must be supplied locally. This mount comes with extrusions and mounting hardware only.

Glass installer necessary for installation.

For appropriate planning applications, see Overlay™ planning guide.

Dimensions

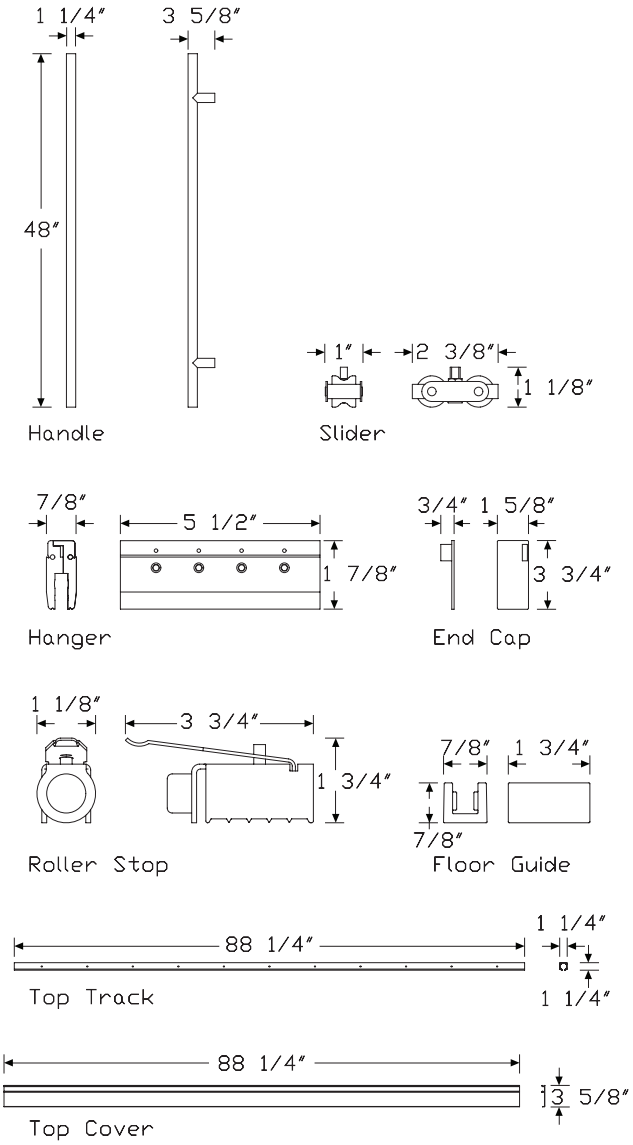

Sliding Glass Door Hardware

continued

Specification Information		
Step 1.		
MN540.		

Step 2. Door Handle		
NDH	no door handle	
YDH	door handle	

Prices for Steps 1-2.		
MN540.NDH		$4832
	YDH	$6543

Step 3. Column and Spanner Finish		
SNA	satin aluminum	+$30
SNB	satin bronze	+$30
SNC	satin carbon	+$30
8Q	folkstone grey	+$0
91	white	+$0
98	studio white	+$0
BK	black	+$0
G1	graphite	+$0
MS	metallic silver	+$0

Step 4. Handle Finish *For door handle (YDH)*		
BRS	brushed stainless	+$0

Curtain Track MN550.

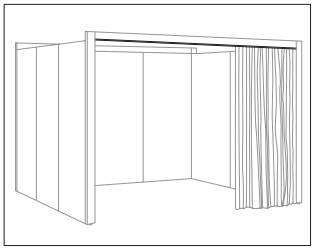

Product Information

Description

This track attaches to the underside of a column spanner to allow use of a fabric curtain. It includes track and hardware. Fabric and clips not included.

Notes

Curtain track to be used with column spanner with no intermediate support column specified.

Curtain track may come in 1 or 2 tracks. Number and length of tracks is predetermined based on overall spanner length.

For appropriate planning applications, see Overlay™ planning guide.

Dimensions

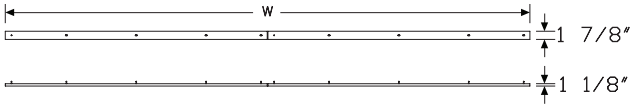

Specification Information

Step 1.

MN550.

Step 2. Spanner Length

06	6′ long
07	7′ long
08	8′ long
10	10′ long
11	11′ long
12	12″ long
14	14′ long
15	15′ long
16	16′ long

Prices for Steps 1-2.

MN550.06		$508
	07	$511
	08	$517
	10	$742
	11	$742
	12	$742
	14	$742
	15	$742
	16	$814

Step 3. Curtain Track Finish

8Q	folkstone grey	+$0
91	white	+$0
98	studio white	+$0
BK	black	+$0
G1	graphite	+$0
MS	metallic silver	+$0
SNA	satin aluminum	+$10
SNB	satin bronze	+$10
SNC	satin carbon	+$10

Perforated Metal MN560.

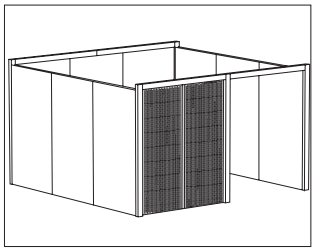

Product Information

Description

This perforated aluminum infill connects to a column and a return spanner or column spanner. Mounting hardware included.

Notes

Perforated metal is used in the spanner zone and can be specified for use with return spanner (MN400.R) or column spanner (MN400.P), ordered separately.

Specify perforated metal by spanner length and spanner zone configuration.

For appropriate planning applications, see Overlay™ planning guide.

Dimensions

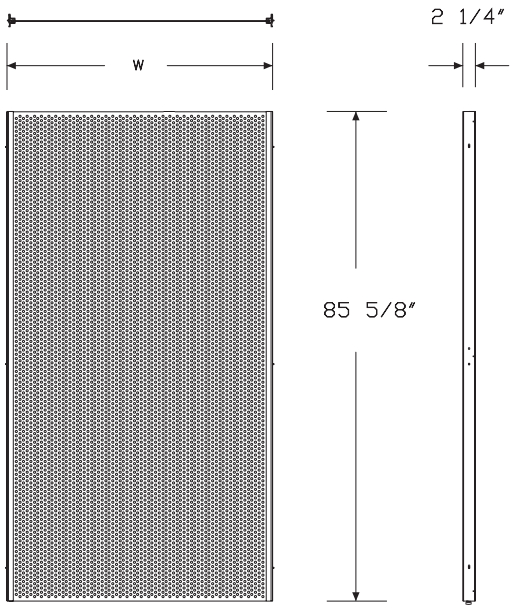

Specification Information

Step 1.

MN560.

Step 2. Spanner Length

04	4' long
06	6' long
07	7' long
08	8' long
10	10' long
12	12' long
16	16' long

Step 3. Configuration

For 4' long (04) or 6' long (06)

FL	full length perforated metal

For 7' long (07)

DP	perforated metal with door column

For 8' long (08)

DP	perforated metal with door column
FL	full length perforated metal

For 10' long (10)

DP	perforated metal with door column

For 12' long (12)

DP	perforated metal with door column
HO	perforated metal with middle column

For 16' long (16)

HO	perforated metal with middle column

Prices for Steps 1-3.

	DP	FL	HO
MN560.04	—	$5015	—
06	—	$7955	—
07	$4354	—	—
08	$5015	9126	—
10	$7955	—	—
12	$9126	—	7955
16	—	—	$9126

Step 4. Finish		
8Q	folkstone grey	+$0
91	white	+$0
98	studio white	+$0
BK	black	+$0
G1	graphite	+$0
MS	metallic silver	+$0
SNA	satin aluminum	+$80
SNB	satin bronze	+$80
SNC	satin carbon	+$80

Trellis MN900.

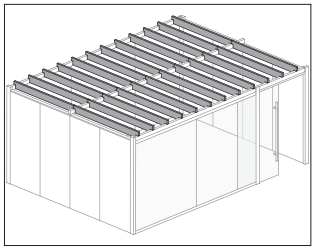

Product Information

Description

This set of components sit atop 2 adjacent column spanners parallel to the performance walls. Trellis is made of PET material. Color is cool heathered grey.

Notes

Trellis is for use only in an Overlay™ configuration that has 2 performance wall structures (MN200.) and 2 spanners (MN400.) that connect the 2 performance walls.

For a performance wall longer than 8′, an intermediate spanner (MN400.W) is needed to accept the Trellis. Order separately.

For appropriate planning applications, see Overlay™ planning guide.

Dimensions

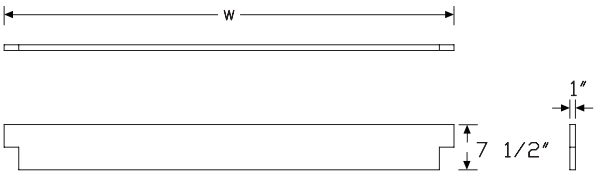

Specification Information

Step 1.

MN900.

Step 2. Performance Wall Length

06 performance wall length 6′ long
07 performance wall length 7′ long
08 performance wall length 8′ long
09 performance wall length 9′ long
10 performance wall length 10′ long
11 performance wall length 11′ long
12 performance wall length 12′ long
13 performance wall length 13′ long
14 performance wall length 14′ long
15 performance wall length 15′ long
16 performance wall length 16′ long

Step 3. Spanner Zone Length

06 spanner zone length 6′ long
07 spanner zone length 7′ long
08 spanner zone length 8′ long
10 spanner zone length 10′ long
11 spanner zone length 11′ long
12 spanner zone length 12′ long
14 spanner zone length 14′ long
15 spanner zone length 15′ long
16 spanner zone length 16′ long

Step 4. Intermediate Spanner

For performance wall length 6' long (06) or performance wall length 7' long (07)

NIS no intermediate spanner

For performance wall length 8' long (08)

NIS no intermediate spanner
YIS intermediate spanner

For performance wall length 9' long (09), performance wall length 10' long (10), performance wall length 11' long (11), performance wall length 12' long (12), performance wall length 13' long (13), performance wall length 14' long (14), performance wall length 15' long (15), or performance wall length 16' long (16)

YIS intermediate spanner

Step 5. Sliding Glass Door

For spanner zone length 6' long (06)

NSG no sliding glass door

For spanner zone length 7' long (07), spanner zone length 8' long (08), spanner zone length 10' long (10), spanner zone length 11' long (11), spanner zone length 12' long (12), spanner zone length 14' long (14), spanner zone length 15' long (15), or spanner zone length 16' long (16)

NSG no sliding glass door
YSG sliding glass door

Step 6. Room Configuration

01 single room configuration
02 dual room configuration

Prices for Steps 1-6.

		NISNSG01	NISNSG02	NISYSG01	NISYSG02	YISNSG01	YISNSG02
MN900.06	**06**	$3090	3090	—	—	—	—
	07	$3638	3638	3638	3638	—	—
	08	$4321	4321	4321	4321	—	—
	10	$5402	5402	5402	5402	—	—
	11	$5941	5941	5941	5941	—	—
	12	$6484	6484	6484	6484	—	—
	14	$7561	7561	7561	7561	—	—
	15	$8101	8101	8101	8101	—	—
	16	$8642	8642	8642	8642	—	—
07	**06**	$3090	3090	—	—	—	—
	07	$3638	3638	3638	3638	—	—
	08	$4321	4321	4321	4321	—	—
	10	$5402	5402	5402	5402	—	—
	11	$5941	5941	5941	5941	—	—
	12	$6484	6484	6484	6484	—	—
	14	$7561	7561	7561	7561	—	—
	15	$8101	8101	8101	8101	—	—
	16	$8642	8642	8642	8642	—	—
08	**06**	$4942	4942	—	—	3118	3118
	07	$5762	5762	5762	5762	3638	3638
	08	$6587	6587	6587	6587	4321	4321
	10	$8234	8234	8234	8234	5402	5402
	11	$9053	9053	9053	9053	5941	5941
	12	$9876	9876	9876	9876	6484	6484
	14	$11521	11521	11521	11521	7561	7561
	15	$12346	12346	12346	12346	8101	8101
	16	$13169	13169	13169	13169	8642	8642
09	**06**	—	—	—	—	$3118	3118
	07	—	—	—	—	$3638	3638
	08	—	—	—	—	$4321	4321
	10	—	—	—	—	$5402	5402
	11	—	—	—	—	$5941	5941
	12	—	—	—	—	$6484	6484
	14	—	—	—	—	$7561	7561
	15	—	—	—	—	$8101	8101
	16	—	—	—	—	$8642	8642
10	**06**	—	—	—	—	$6484	6484
	07	—	—	—	—	$7561	7561
	08	—	—	—	—	$8642	8642
	10	—	—	—	—	$10800	10800
	11	—	—	—	—	$11880	11880
	12	—	—	—	—	$12962	12962
	14	—	—	—	—	$15119	15119
	15	—	—	—	—	$16357	16357
	16	—	—	—	—	$17446	17446
11	**06**	—	—	—	—	$6484	6484
	07	—	—	—	—	$7561	7561
	08	—	—	—	—	$8642	8642
	10	—	—	—	—	$10800	10800
	11	—	—	—	—	$11880	11880
	12	—	—	—	—	$12962	12962
	14	—	—	—	—	$15119	15119
	15	—	—	—	—	$16357	16357
	16	—	—	—	—	$17446	17446
12	**06**	—	—	—	—	$6484	6484
	07	—	—	—	—	$7561	7561
	08	—	—	—	—	$8642	8642
	10	—	—	—	—	$10800	10800
	11	—	—	—	—	$11880	11880
	12	—	—	—	—	$12962	12962
	14	—	—	—	—	$15119	15119
	15	—	—	—	—	$16357	16357
	16	—	—	—	—	$17446	17446
13	**06**	—	—	—	—	$6484	6484
	07	—	—	—	—	$7561	7561
	08	—	—	—	—	$8642	8642
	10	—	—	—	—	$10800	10800
	11	—	—	—	—	$11880	11880
	12	—	—	—	—	$12962	12962
	14	—	—	—	—	$15119	15119
	15	—	—	—	—	$16357	16357
	16	—	—	—	—	$17446	17446

14	**06**	—	—	—	— $6484	6484
	07	—	—	—	— $7561	7561
	08	—	—	—	— $8642	8642
	10	—	—	—	—$10800	10800
	11	—	—	—	—$11880	11880
	12	—	—	—	—$12962	12962
	14	—	—	—	—$15119	15119
	15	—	—	—	—$16357	16357
	16	—	—	—	—$17446	17446
15	**06**	—	—	—	— $9876	9876
	07	—	—	—	—$11521	11521
	08	—	—	—	—$13169	13169
	10	—	—	—	—$16458	16458
	11	—	—	—	—$18105	18105
	12	—	—	—	—$19750	19750
	14	—	—	—	—$23042	23042
	15	—	—	—	—$24690	24690
	16	—	—	—	—$26333	26333
16	**06**	—	—	—	— $9876	9876
	07	—	—	—	—$11521	11521
	08	—	—	—	—$13169	13169
	10	—	—	—	—$16458	16458
	11	—	—	—	—$18105	18105
	12	—	—	—	—$19750	19750
	14	—	—	—	—$23042	23042
	15	—	—	—	—$24690	24690
	16	—	—	—	—$26333	26333

		YISYSG01	YISYSG02
MN900.08	**07**	$3638	3638
	08	$4321	4321
	10	$5402	5402
	11	$5941	5941
	12	$6484	6484
	14	$7561	7561
	15	$8101	8101
	16	$8642	8642
09	**07**	$3638	3638
	08	$4321	4321
	10	$5402	5402
	11	$5941	5941
	12	$6484	6484
	14	$7561	7561
	15	$8101	8101
	16	$8642	8642
10	**07**	$7561	7561
	08	$8642	8642
	10	$10800	10800
	11	$11880	11880
	12	$12962	12962
	14	$15119	15119
	15	$16357	16357
	16	$17446	17446
11	**07**	$7561	7561
	08	$8642	8642
	10	$10800	10800
	11	$11880	11880
	12	$12962	12962
	14	$15119	15119
	15	$16357	16357
	16	$17446	17446
12	**07**	$7561	7561
	08	$8642	8642
	10	$10800	10800
	11	$11880	11880
	12	$12962	12962
	14	$15119	15119
	15	$16357	16357
	16	$17446	17446
13	**07**	$7561	7561
	08	$8642	8642
	10	$10800	10800
	11	$11880	11880
	12	$12962	12962
	14	$15119	15119
	15	$16357	16357
	16	$17446	17446
14	**07**	$7561	7561
	08	$8642	8642
	10	$10800	10800
	11	$11880	11880
	12	$12962	12962
	14	$15119	15119
	15	$16357	16357
	16	$17446	17446

15	**07**	$11521	11521
	08	$13169	13169
	10	$16458	16458
	11	$18105	18105
	12	$19750	19750
	14	$23042	23042
	15	$24690	24690
	16	$26333	26333
16	**07**	$11521	11521
	08	$13169	13169
	10	$16458	16458
	11	$18105	18105
	12	$19750	19750
	14	$23042	23042
	15	$24690	24690
	16	$26333	26333

Step 7. Finish		
PLG	cool heathered grey	+$0

Media Mounting Components MN910.

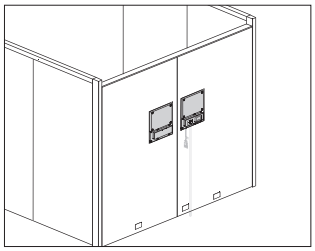

Product Information

Description

Media mounting components include mounting board(s) and electrical housing to accommodate the mounting of 1 screen or monitor. Electrical housing includes 1 duplex to be used for system power, and wire management for data infeed.

Notes

For use with performance wall structure (MN200.) only. Order structure separately.

Order performance wall cladding with monitor mount (MN210. xxxxxxxYM) separately.

Order media structure (MN915.) separately.

For appropriate planning applications, see Overlay™ planning guide.

Service part required for 8′ performance walls that accommodate a monitor mount and a light switch within the same wall, whether the switch and monitor are on the same side or opposite sides of the wall. Order service part U1BN5C0, Media Kit 8 ft w Light Switch, through Service Parts.

Dimensions

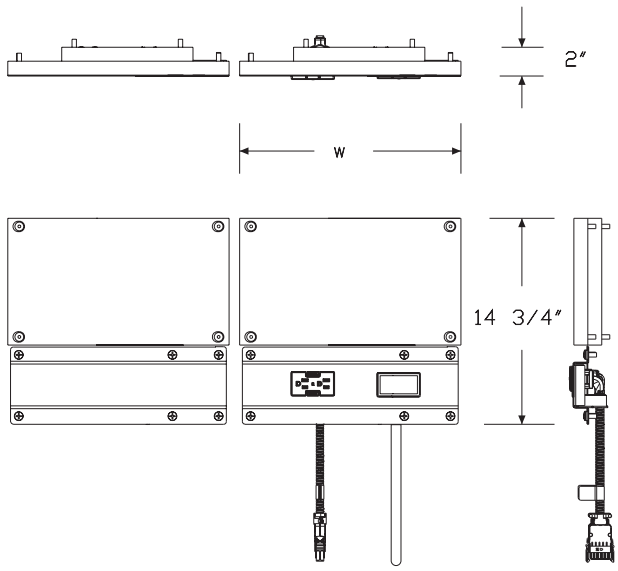

Specification Information

Step 1.

MN910.

Step 2. Configuration

08	8-wire, 4-circuit, shared neutral
10	10-wire, 4-circuit, separate neutrals

Step 3. Performance Wall Length

06	6′ long
07	7′ long
08	8′ long
09	9′ long
10	10′ long
11	11′ long
12	12′ long
13	13′ long
14	14′ long
15	15′ long
16	16′ long

Prices for Steps 1-3.

	06	07	08	09	10	11
MN910.08	$1384	1384	1384	1100	1100	1100
10	$1384	1384	1384	1100	1100	1100

	12	13	14	15	16
MN910.08	$1100	1384	1384	1384	1384
10	$1100	1384	1384	1384	1384

Media Structure MN915.

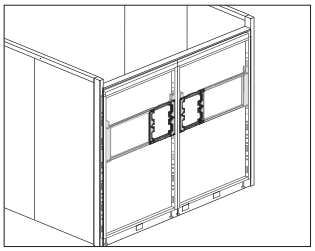

Product Information

Description

This structure mounts to the performance wall structure to create a substrate for a monitor mounting bracket. Media structure includes rails, substrate, and all hardware.

Notes

Monitor mounting bracket must be field supplied.

For use with performance wall structure (MN200.) only. Order structure separately.

Order performance wall cladding with monitor mount (MN210. xxxxxxxYM) separately.

Order media components (MN910.) separately.

For appropriate planning applications, see Overlay™ planning guide.

Dimensions

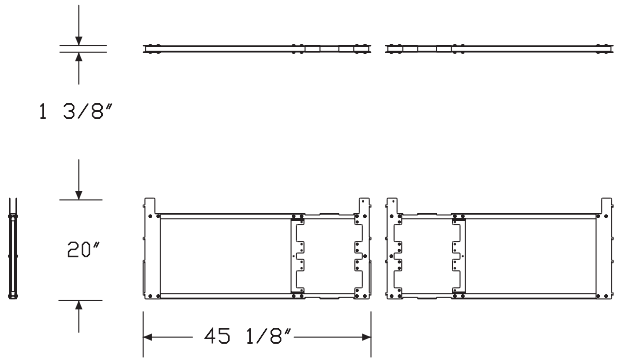

Specification Information

Step 1.

MN915.

Step 2. Performance Wall Length

06	6′ long
07	7′ long
08	8′ long
09	9′ long
10	10′ long
11	11′ long
12	12′ long
13	13′ long
14	14′ long
15	15′ long
16	16′ long

Prices for Steps 1-2.

MN915.06	$3532
07	$3532
08	$3532
09	$2072
10	$2072
11	$2072
12	$2072
13	$3532
14	$3532
15	$3532
16	$3532

Lite Rail MN920.

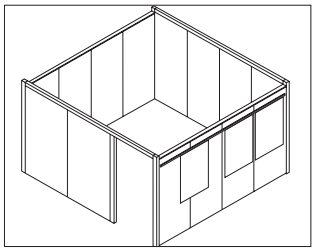

Product Information

Description

This rail mounts to performance wall cladding and spanner zone cladding to support Exclave™ small boards and large boards. Rail comes with cleats and end caps.

Notes

Order Exclave small and large boards separately.

Specify performance wall cladding (MN210.) and spanner zone cladding (MN510.) for use with lite rail.

Lite rail attaches to cladding in predetermined locations and spans full length of cladding configuration specified.

For appropriate planning applications, see Overlay™ planning guide.

Dimensions

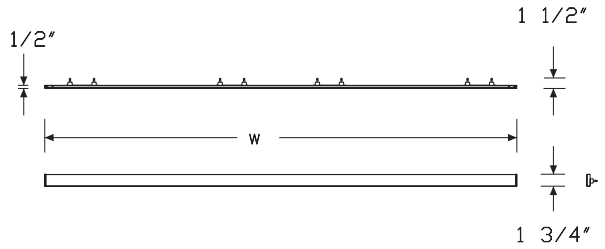

Specification Information

Step 1.

MN920.

Step 2. Wall Type

PW	performance wall
SZ	spanner zone

Step 3. Overall Length

For performance wall (PW)

06	6′ long
07	7′ long
08	8′ long
09	9′ long
10	10′ long
11	11′ long
12	12′ long
13	13′ long
14	14′ long
15	15′ long
16	16′ long

For spanner zone (SZ)

06	6′ long
07	7′ long
08	8′ long
10	10′ long
11	11′ long
12	12′ long
14	14′ long
15	15′ long
16	16′ long

Step 4. Configuration Options

For spanner zone (SZ) with 6' long (06), 7' long (07), or 8' long (08)

FL	full length spanner zone

For spanner zone (SZ) with 10' long (10) or 11' long (11)

FL	full length spanner zone
DD	spanner zone with door column

For spanner zone (SZ) with 12' long (12), 14' long (14), 15' long (15), or 16' long (16)

FL	full length spanner zone
DD	spanner zone with door column
HO	spanner zone with middle column

For performance wall (PW)

FP	full length performance wall A

Prices for Steps 1-4.

		FP	FL	DD	HO
MN920.PW	**06**	$560	—	—	—
	07	$560	—	—	—
	08	$560	—	—	—
	09	$726	—	—	—
	10	$726	—	—	—
	11	$726	—	—	—
	12	$726	—	—	—
	13	$912	—	—	—
	14	$912	—	—	—
	15	$912	—	—	—
	16	$912	—	—	—
SZ	**06**	—	$560	—	—
	07	—	$560	—	—
	08	—	$560	—	—
	10	—	$726	560	—
	11	—	$726	560	—
	12	—	$726	560	560
	14	—	$912	726	560
	15	—	$912	726	560
	16	—	$912	726	560

Step 5. Finish

SNC	satin carbon	+$37
AN	anodized	+$0

Light Seal MN930.

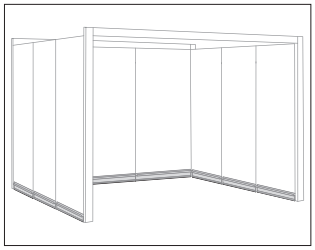

Product Information

Description

This light seal is optional and can be specified for the performance wall or the spanner zone. Seals are installed horizontally below the cladding. Color is black.

Notes

Lengths are 8′ and can be field cut to fit. For wall longer than 8′, specify 2 or more light seals.

Dimensions

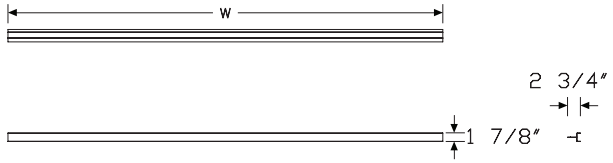

Specification Information

Step 1.

MN930.

Step 2. Wall Type

PW	performance wall
SZ	spanner zone

Step 3. Overall Length

08	8′ long

Prices for Steps 1-3.

	08
MN930.PW	$48
SZ	$43

Linear Light MN100.

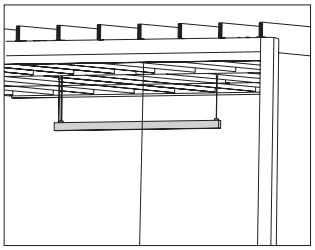

Product Information

Description

This light suspends from an intermediate spanner. Light comes with power jumper from light to switch, hardware pack, mounting kit, light switch, and switch bracket. Linear light is UL Listed and Canadian UL Listed.

Notes

Licensed electrician must wire linear light.

Linear light must route to powered performance wall.

Order performance wall cladding with light switch option (MN210.xxxRL, MN210.xxxLL) separately.

Dimensions

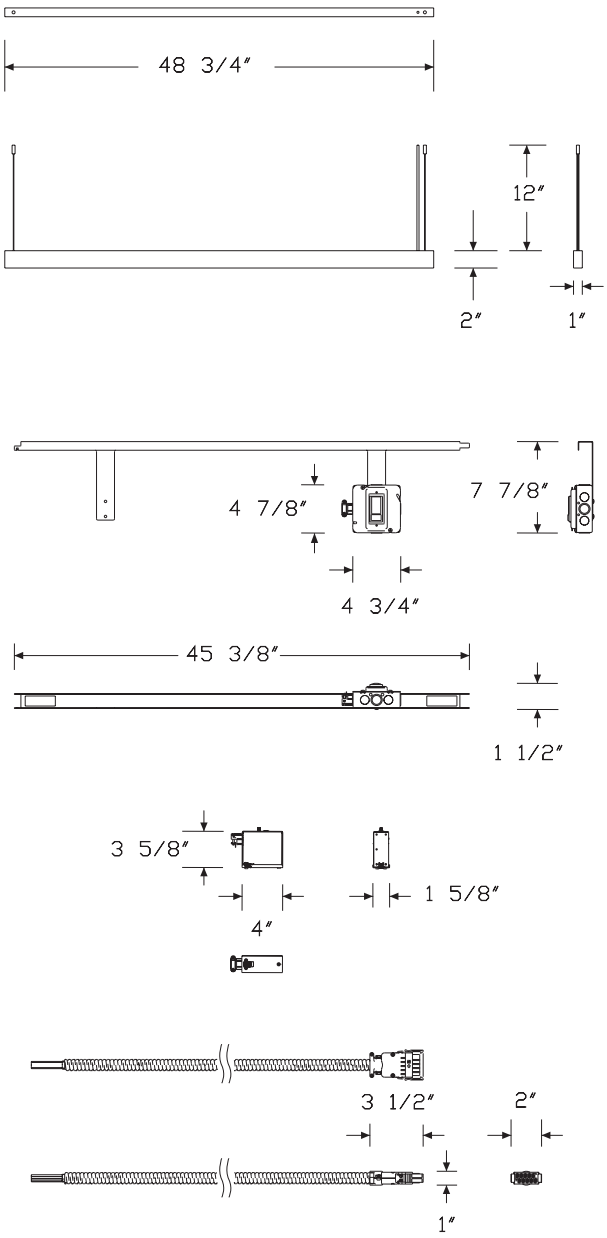

Specification Information
Step 1.
MN100.

Step 2. Configuration	
08	8-wire, 4-circuit, shared neutral
10	10-wire, 4-circuit, separate neutrals

Step 3. Performance Wall Length	
08	8′ long
09	9′ long
10	10′ long
11	11′ long
12	12′ long
13	13′ long
14	14′ long
15	15′ long
16	16′ long

Prices for Steps 1-3.

		08	**09**	**10**	**11**	**12**	**13**
MN100.08		$6027	6027	6027	6027	6027	6027
	10	$6146	6146	6146	6146	6146	6146

		14	**15**	**16**
MN100.08		$6027	6027	6027
	10	$6146	6146	6146

Step 4. Light Finish		
0H	black	+$114
0J	white	+$0

Step 5. Light Switch Faceplate Finish		
0H	black	+$0
0J	white	+$0

Power Entry, Floor MN140.

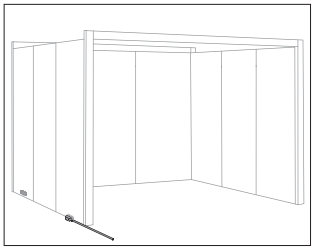

Product Information

Description

This power entry connects a building's electrical supply from the floor to any powered performance wall structure. Power entry takes the place of a receptacle location in the performance wall. It is available in 8-wire and 10-wire configurations and distributes up to 4 20-amp circuits. It is available in 4 lengths and can be field cut to appropriate length. Power entry is UL Listed and Canadian UL Listed.

Notes

Receptacle cutout locations to be specified within performance wall cladding (MN210.).

Licensed electrician must wire power entry.

Power entry uses 1 modular connection location on adjacent power harness (MN150.).

Dimensions

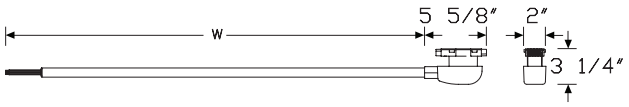

Specification Information

Step 1.

MN140.

Step 2. Configuration

08	8-wire, 4-circuit, shared neutral
10	10-wire, 4-circuit, separate neutrals

Step 3. Power Entry Whip Length

06	6′ long
12	12′ long
18	18′ long
24	24′ long

Prices for Steps 1-3.

		06	12	18	24
MN140.	**08**	$329	545	763	978
	10	$357	592	829	1063

Power Entry, New York - Floor MN141.

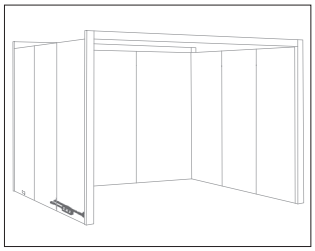

Product Information

Description

This power entry connects a floor infeed from a building's electrical supply to the base of the performance wall structure. It connects to the modular connection location on the end of a power harness and includes a junction box. Power entry is designed to be compliant with New York infeed requirements. Power entry is UL Listed and Canadian UL Listed.

Notes

Licensed electrician must wire power entry.

The performance wall cladding (MN210.) panel that has power entry cannot have cutouts for receptacles.

Power entry uses 1 modular connection location on 1 end of adjacent power harness (MN150.).

Dimensions

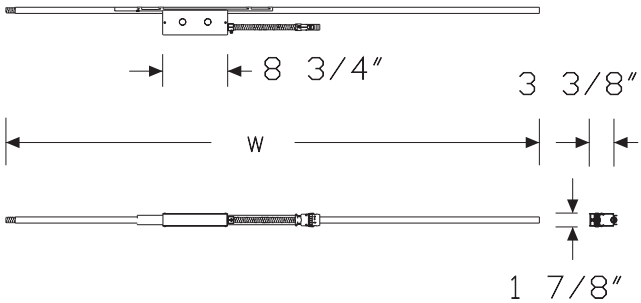

Specification Information

Step 1.

MN141.

Step 2. Configuration

08	8-wire, 4-circuit, shared neutral
10	10-wire, 4-circuit, separate neutrals

Step 3. Performance Wall Length

06	6′ long
07	7′ long
08	8′ long
09	9′ long
10	10′ long
11	11′ long
12	12′ long
13	13′ long
14	14′ long
15	15′ long
16	16′ long

Step 4. Power Entry Whip Length

06	6′ long
12	12′ long
18	18′ long
24	24′ long

Prices for Steps 1-4.

		06	12	18	24
MN141.08	**06**	$745	855	963	1072
	07	$824	933	1040	1151
	08	$902	1012	1122	1229
	09	$745	855	963	1072
	10	$824	933	1040	1151
	11	$824	933	1040	1151
	12	$902	1012	1122	1229
	13	$745	855	963	1705
	14	$824	933	1040	1151
	15	$824	933	1040	1151
	16	$902	1012	1122	1229

Power Entry, New York - Floor

continued

10 06	$809	918	1025	1135
07	$894	1003	1113	1223
08	$983	1090	1200	1309
09	$809	918	1025	1135
10	$894	1003	1113	1223
11	$894	1003	1113	1223
12	$983	1090	1200	1309
13	$809	918	1025	1135
14	$894	1003	1113	1223
15	$894	1003	1113	1223
16	$983	1090	1200	1309

Power Entry, Ceiling MN143.

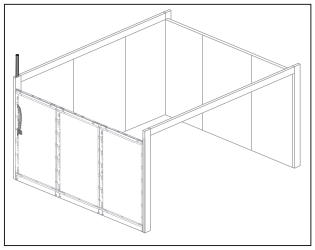

Product Information

Description

This power entry connects a building's electrical supply from the ceiling to a performance wall column. It is available in 8-wire and 10-wire configurations and distributes up to 4 20-amp circuits. Includes black or white nylon sleeve to bundle wires and conduit. Power entry is UL Listed and Canadian UL Listed.

Notes

Performance wall column must be connected to a powered performance wall.

Licensed electrician must wire power entry.

Order appropriate performance wall jumper (MN155.) separately.

Dimensions

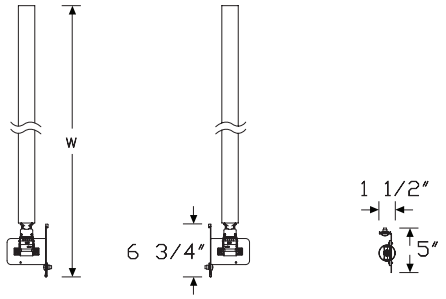

Specification Information

Step 1.

MN143.

Step 2. Configuration

08	8-wire, 4-circuit, shared neutral
10	10-wire, 4-circuit, separate neutrals

Step 3. Power Entry Whip Length

06	6′ long
12	12′ long
18	18′ long
24	24′ long

Prices for Steps 1-3.

		06	**12**	**18**	**24**
MN143.08		$498	745	1016	1262
	10	$510	762	1039	1281

Step 4. Wire Management Sleeve

0H	black	+$0
0J	white	+$0

Power Entry, New York - Ceiling MN144.

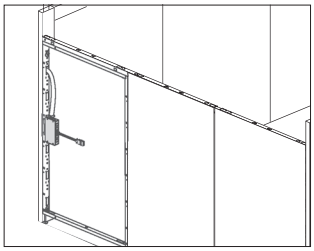

Product Information

Description

This power entry connects a building's electrical supply from ceiling to a performance wall column. It is available in 8-wire and 10-wire configurations and distributes up to 4 20-amp circuits. Power entry is designed to be compliant with New York infeed requirements. Power entry is UL Listed and Canadian UL Listed.

Notes

Licensed electrician must wire power entry.

Performance wall column must be connected to a powered performance wall.

Power entry uses 1 modular connection location on 1 end of adjacent power harness (MN150.).

Dimensions

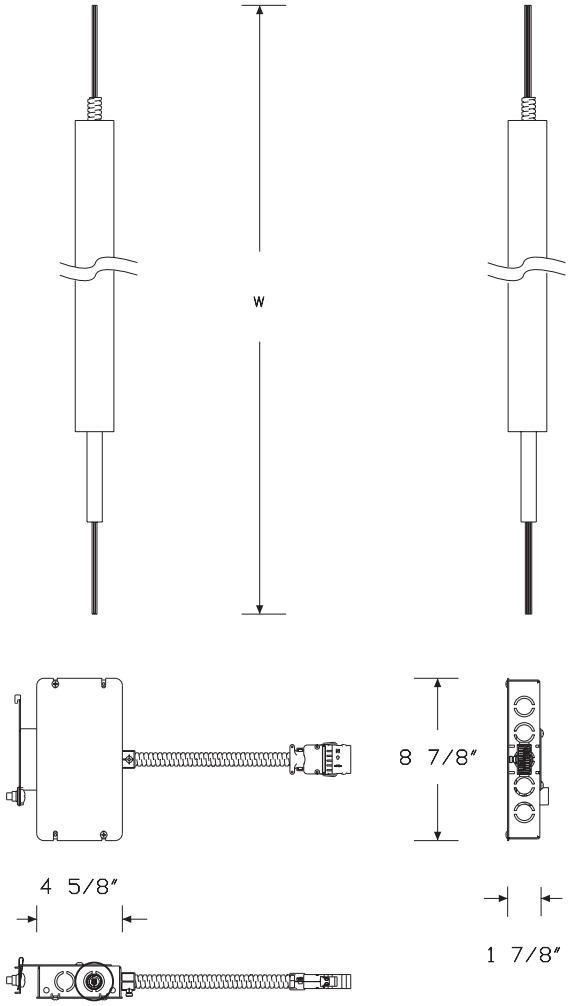

Power Entry, New York - Ceiling

continued

Specification Information
Step 1.
MN144.

Step 2. Configuration	
08	8-wire, 4-circuit, shared neutral
10	10-wire, 4-circuit, separate neutrals

Step 3. Power Entry Whip Length	
06	6′ long
12	12′ long
18	18′ long
24	24′ long

Prices for Steps 1-3.

		06	**12**	**18**	**24**
MN144.08		$599	793	987	1179
	10	$637	830	1024	1217

Step 4. Wire Management Sleeve		
0H	black	+$0
0J	white	+$0

Cutout Cover (Package of 6) MN151.

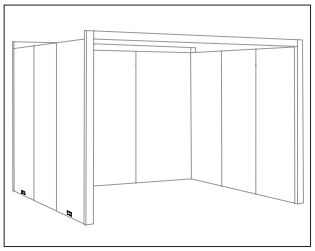

Product Information

Description

This cover is used in performance walls where cladding cutout is present and no power access is needed. Package contains 6 covers.

Dimensions

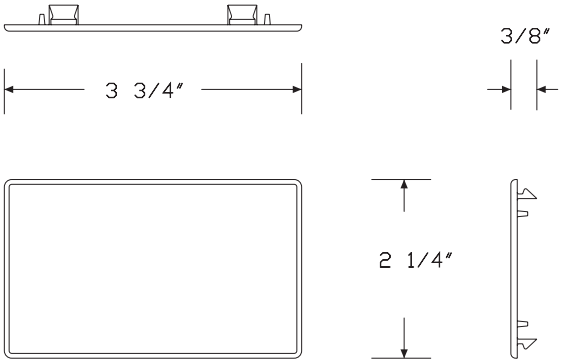

Specification Information

Step 1.

MN151.	$31

Step 2. Finish

3G	brownstone	+$0
8Q	folkstone grey	+$0
91	white	+$0
98	studio white	+$0
BK	black	+$0
CL	cool grey neutral	+$0
G1	graphite	+$0
WL	sandstone	+$0
WN	warm grey neutral	+$0

Power Harness MN150.

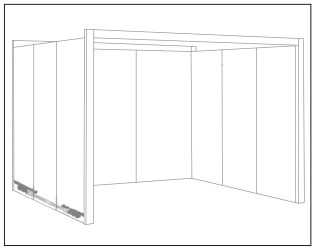

Product Information

Description

This power harness distributes power within performance wall structure. It is available in 8-wire and 10-wire configurations and distributes up to 4 20-amp circuits. It provides 2 receptacle locations, 1 on each side of the performance wall. Harness is suspended from the bottom of the performance wall structure within the interior of the frame. Performance wall length determines how many harnesses can be used. Harness is UL Listed and Canadian UL Listed.

Notes

Order these products separately:

- Power jumper (MN155.)
- Receptacles (MN152., MN152M., MN153., MN153M.)

Dimensions

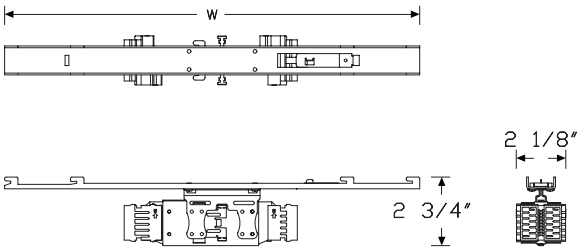

Specification Information

Step 1.

MN150.

Step 2. Configuration

08	8-wire, 4-circuit, shared neutral
10	10-wire, 4-circuit, separate neutrals

Step 3. Performance Wall Length

06	6′ long
07	7′ long
08	8′ long
09	9′ long
10	10′ long
11	11′ long
12	12′ long
13	13′ long
14	14′ long
15	15′ long
16	16′ long

Step 4. Power Cutout

For 6' long (06), 7' long (07), or 8' long (08)

22	2 duplex cutout

For 9' long (09), 10' long (10), 11' long (11), or 12' long (12)

32	2 duplex cutout
33	3 duplex cutout

For 13' long (13), 14' long (14), 15' long (15), or 16' long (16)

42	2 duplex cutout
44	4 duplex cutout

Prices for Steps 1-4.

		22	32	33	42	44
MN150.08	**06**	$353	—	—	—	—
	07	$370	—	—	—	—
	08	$386	—	—	—	—
	09	—	$353	528	—	—
	10	—	$370	545	—	—
	11	—	$370	562	—	—
	12	—	$388	580	—	—
	13	—	—	—	$370	720
	14	—	—	—	$370	736
	15	—	—	—	$388	755
	16	—	—	—	$388	770

10 06	$388	—	—	—	—
07	$404	—	—	—	—
08	$424	—	—	—	—
09	—	$388	577	—	—
10	—	$404	597	—	—
11	—	$404	614	—	—
12	—	$424	634	—	—
13	—	—	—	$404	789
14	—	—	—	$404	807
15	—	—	—	$424	824
16	—	—	—	$424	845

Receptacle, 4-Circuit, 15 amp MN152.

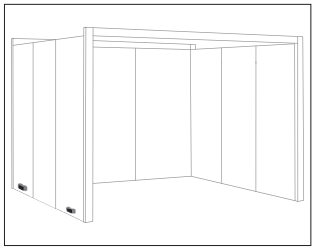

Product Information

Description

This receptacle locks into the power harness of a frame. It is UL Listed and Canadian UL Listed. Package contains 6 receptacles.

Notes

Receptacles can be placed on each side of the performance wall structure in standard locations.

Dimensions

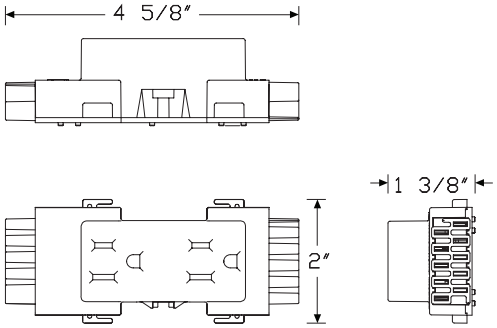

Specification Information

Step 1.

MN152.

Step 2. Type

AN	8-wire duplex, shared neutral, circuit a
BN	8-wire duplex, shared neutral, circuit b
CN	8-wire duplex, shared neutral, circuit c
DN	8-wire duplex, shared neutral, circuit d
1G	10-wire duplex, separate neutrals, circuit a, isolated ground
2G	10-wire duplex, separate neutrals, circuit b, isolated ground
3G	10-wire duplex, separate neutrals, circuit c, isolated ground
4G	10-wire duplex, separate neutrals, circuit d, isolated ground
1N	10-wire duplex, separate neutrals, circuit a
2N	10-wire duplex, separate neutrals, circuit b
3N	10-wire duplex, separate neutrals, circuit c
4N	10-wire duplex, separate neutrals, circuit d
AG	8-wire duplex, shared neutral, circuit a, isolated ground
BG	8-wire duplex, shared neutral, circuit b, isolated ground
CG	8-wire duplex, shared neutral, circuit c, isolated ground
DG	8-wire duplex, shared neutral, circuit d, isolated ground

Prices for Steps 1-2.

MN152.AN	$216
BN	$216
CN	$216
DN	$216
1G	$216
2G	$216
3G	$216
4G	$216
1N	$216
2N	$216
3N	$216
4N	$216
AG	$216
BG	$216
CG	$216
DG	$216

Receptacle, 4-Circuit, 15 amp

continued

Step 3. Finish		
3G	brownstone	+$0
8Q	folkstone grey	+$0
91	white	+$0
98	studio white	+$0
BK	black	+$0
CL	cool grey neutral	+$0
G1	graphite	+$0
WL	sandstone	+$0
WN	warm grey neutral	+$0

Controlled Receptacle, 4-Circuit, 15 amp MN152M

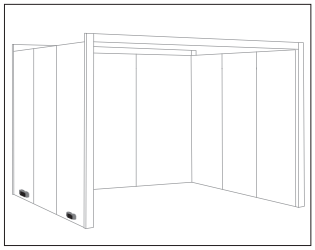

Product Information

Description

This receptacle is to be used for ASHRAE90.1 and Title 24 compliance. A controlled receptacle should be used for any receptacle that is automatically controlled by the energy management system. Receptacle locks into the power harness of a frame. It is UL Listed and Canadian UL Listed. Package contains 6 receptacles.

Notes

Receptacles can be placed on each side of the performance wall structure in standard locations.

Dimensions

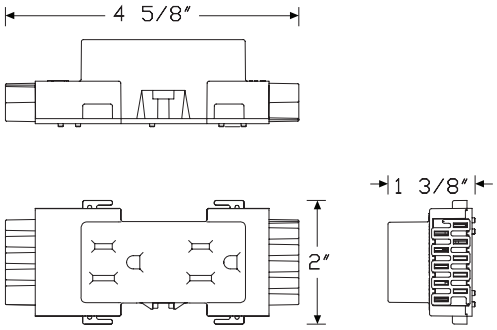

Specification Information

Step 1.

MN152M.

Step 2. Type

AN	8-wire duplex, shared neutral, circuit a
BN	8-wire duplex, shared neutral, circuit b
CN	8-wire duplex, shared neutral, circuit c
DN	8-wire duplex, shared neutral, circuit d
1G	10-wire duplex, separate neutrals, circuit a, isolated ground
2G	10-wire duplex, separate neutrals, circuit b, isolated ground
3G	10-wire duplex, separate neutrals, circuit c, isolated ground
4G	10-wire duplex, separate neutrals, circuit d, isolated ground
1N	10-wire duplex, separate neutrals, circuit a
2N	10-wire duplex, separate neutrals, circuit b
3N	10-wire duplex, separate neutrals, circuit c
4N	10-wire duplex, separate neutrals, circuit d
AG	8-wire duplex, shared neutral, circuit a, isolated ground
BG	8-wire duplex, shared neutral, circuit b, isolated ground
CG	8-wire duplex, shared neutral, circuit c, isolated ground
DG	8-wire duplex, shared neutral, circuit d, isolated ground

Prices for Steps 1-2.

MN152M.	**AN**	$219
	BN	$219
	CN	$219
	DN	$219
	1G	$219
	2G	$219
	3G	$219
	4G	$219
	1N	$219
	2N	$219
	3N	$219
	4N	$219
	AG	$219
	BG	$219
	CG	$219
	DG	$219

Controlled Receptacle, 4-Circuit, 15 amp *continued*

Step 3. Finish		
3G	brownstone	+$0
8Q	folkstone grey	+$0
91	white	+$0
98	studio white	+$0
BK	black	+$0
CL	cool grey neutral	+$0
G1	graphite	+$0
WL	sandstone	+$0
WN	warm grey neutral	+$0

Receptacle, 4-Circuit, 20 amp MN153.

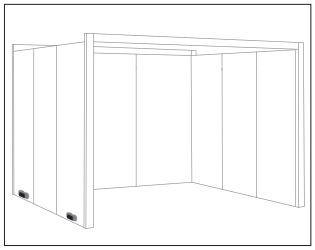

Product Information

Description

This receptacle locks into the power harness of a frame. It is UL Listed and Canadian UL Listed. Single-pack unit includes 1 receptacle.

Notes

Receptacles can be placed on each side of the performance wall structure in standard locations.

Dimensions

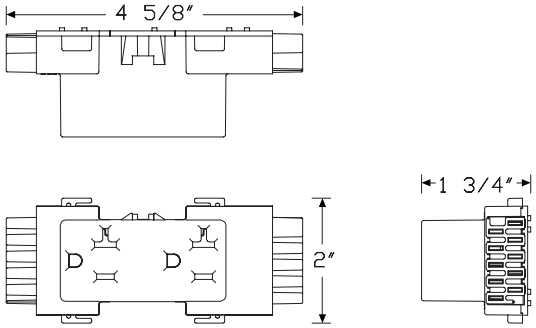

Specification Information

Step 1.

MN153.

Step 2. Type

AN	8-wire duplex, shared neutral, circuit a
BN	8-wire duplex, shared neutral, circuit b
1G	10-wire duplex, separate neutrals, circuit a, isolated ground
2G	10-wire duplex, separate neutrals, circuit b, isolated ground
1N	10-wire duplex, separate neutrals, circuit a
2N	10-wire duplex, separate neutrals, circuit b
AG	8-wire duplex, shared neutral, circuit a, isolated ground
BG	8-wire duplex, shared neutral, circuit b, isolated ground

Prices for Steps 1-2.

MN153.	**AN**	$59
	BN	$59
	1G	$59
	2G	$59
	1N	$59
	2N	$59
	AG	$59
	BG	$59

Step 3. Finish

3G	brownstone	+$0
8Q	folkstone grey	+$0
91	white	+$0
98	studio white	+$0
BK	black	+$0
CL	cool grey neutral	+$0
G1	graphite	+$0
WL	sandstone	+$0
WN	warm grey neutral	+$0

Controlled Receptacle, 4-Circuit, 20 amp MN153M

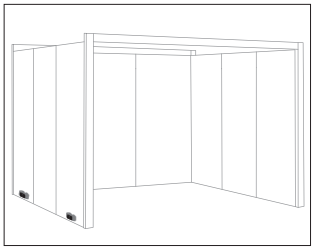

Product Information

Description

This receptacle snaps into an 8-wire, 4-circuit, shared neutral power harness or a 10-wire, 4-circuit, separate neutral power harness to provide power to equipment with a 20-amp standard plug head or cap. It also accepts 15-amp standard plug heads or caps. Receptacle is UL Listed. Single-pack unit includes 1 receptacle.

Notes

Avoid overloading circuit by ensuring total connected load does not exceed 16 amps. If 1 piece of equipment requires all available power, do not use receptacle's second outlet or install additional receptacles on that circuit. In many cases, equipment requiring this receptacle will use all available power.

Dimensions

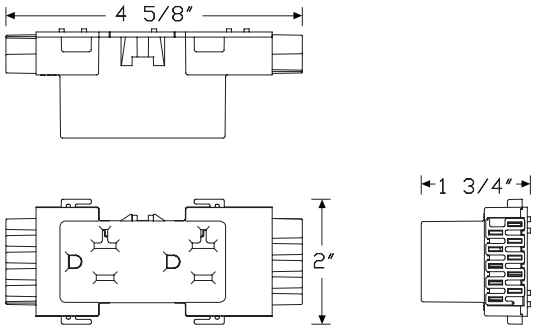

Specification Information

Step 1.

MN153M.

Step 2. Type

AN	8-wire duplex, shared neutral, circuit a
BN	8-wire duplex, shared neutral, circuit b
1G	10-wire duplex, separate neutrals, circuit a, isolated ground
2G	10-wire duplex, separate neutrals, circuit b, isolated ground
1N	10-wire duplex, separate neutrals, circuit a
2N	10-wire duplex, separate neutrals, circuit b
AG	8-wire duplex, shared neutral, circuit a, isolated ground
BG	8-wire duplex, shared neutral, circuit b, isolated ground

Prices for Steps 1-2.

MN153M.	**AN**	$60
	BN	$60
	1G	$60
	2G	$60
	1N	$60
	2N	$60
	AG	$60
	BG	$60

Step 3. Finish

3G	brownstone	+$0
8Q	folkstone grey	+$0
91	white	+$0
98	studio white	+$0
BK	black	+$0
CL	cool grey neutral	+$0
G1	graphite	+$0
WL	sandstone	+$0
WN	warm grey neutral	+$0

Performance Wall Power Jumper MN155.

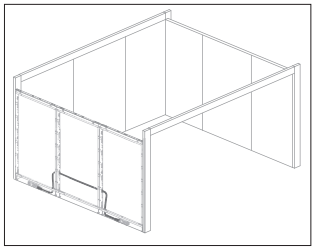

Product Information

Description

This power jumper connects power horizontally from one power harness to another. It connects power between adjacent frames. Power jumper connects into the end of a harness; it does not connect into a receptacle location. Power jumper is UL Listed and Canadian UL Listed.

Notes

For ceiling, floor or no infeed locations (CL, FL, NO), appropriate jumper will be supplied to reach from base power to infeed.

When using linear light (MN100.), specify yes light switch (YL) option for a jumper that connects power harness to light switch. Linear light comes with jumper from switch to light.

Jumper uses 1 of 4 modular connections on each end of adjacent power harness (MN150.).

For appropriate planning applications, see Overlay™ planning guide.

Dimensions

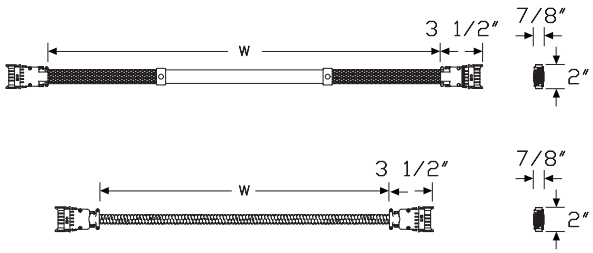

Specification Information

Step 1.

MN155.

Step 2. Configuration

08 8-wire, 4-circuit, shared neutral
10 10-wire, 4-circuit, separate neutrals

Step 3. Performance Wall Length

06 6′ long
07 7′ long
08 8′ long
09 9′ long
10 10′ long
11 11′ long
12 12′ long
13 13′ long
14 14′ long
15 15′ long
16 16′ long

Step 4. Power Cutout

For 6' long (06), 7' long (07), or 8' long (08)

22 2 duplex cutout

For 9' long (09), 10' long (10), 11' long (11), or 12' long (12)

32 2 duplex cutout
33 3 duplex cutout

For 13' long (13), 14' long (14), 15' long (15), or 16' long (16)

42 2 duplex cutout
44 4 duplex cutout

Step 5. Infeed Location

CL ceiling infeed location
FL floor infeed location
NO no infeed (for when infeed comes from a different performance wall)

Step 6. Light Switch Infeed

NL no light switch
YL light switch

Performance Wall Power Jumper

continued

Prices for Steps 1-6.

	22CLNL	22CLYL	22FLNL	22FLYL	22NONL	22NOYL
MN155.08 06	$437	437	185	185	185	185
07	$437	437	185	185	185	185
08	$437	437	185	185	185	185
10 06	$562	562	185	185	185	185
07	$562	562	185	185	185	185
08	$562	562	185	185	185	185

	32CLNL	32CLYL	32FLNL	32FLYL	32NONL	32NOYL
MN155.08 09	$490	490	237	237	237	237
10	$490	490	237	237	237	237
11	$490	490	237	237	237	237
12	$490	490	237	237	237	237
10 09	$539	539	264	264	264	264
10	$539	539	264	264	264	264
11	$539	539	264	264	264	264
12	$539	539	264	264	264	264

	33CLNL	33CLYL	33FLNL	33FLYL	33NONL	33NOYL
MN155.08 09	$620	620	370	370	370	370
10	$620	620	370	370	370	370
11	$620	620	370	370	370	370
12	$620	620	370	370	370	370
10 09	$688	688	412	412	412	412
10	$688	688	412	412	412	412
11	$688	688	412	412	412	412
12	$688	688	412	412	412	412

	42CLNL	42CLYL	42FLNL	42FLYL	42NONL	42NOYL
MN155.08 13	$437	437	185	185	185	185
14	$437	437	185	185	185	185
15	$437	437	185	185	185	185
16	$437	437	185	185	185	185
10 13	$562	562	185	185	185	185
14	$562	562	185	185	185	185
15	$562	562	185	185	185	185
16	$562	562	185	185	185	185

	44CLNL	44CLYL	44FLNL	44FLYL	44NONL	44NOYL
MN155.08 13	$845	845	554	554	554	554
14	$845	845	554	554	554	554
15	$845	845	554	554	554	554
16	$845	845	554	554	554	554
10 13	$893	893	614	614	614	614
14	$893	893	614	614	614	614
15	$893	893	614	614	614	614
16	$893	893	614	614	614	614

Spanner Zone Jumper MN156.

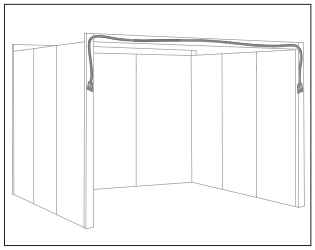

Product Information

Description

This power jumper connects power horizontally from one performance wall power harness to another performance wall power harness through the column spanner. Spanner power jumper connects into the end of a harness; it does not connect into a receptacle location. Power jumper is UL Listed and Canadian UL Listed.

Notes

For appropriate planning applications, see Overlay™ planning guide.

Dimensions

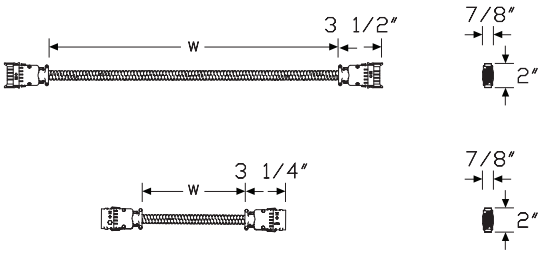

Specification Information

Step 1.

MN156.

Step 2. Configuration

08	8-wire, 4-circuit, shared neutral
10	10-wire, 4-circuit, separate neutrals

Step 3. Spanner Zone Length

06	6′ long
07	7′ long
08	8′ long
10	10′ long
11	11′ long
12	12′ long
14	14′ long
15	15′ long
16	16′ long

Prices for Steps 1-3.

	06	07	08	10	11	12
MN156.08	$917	917	917	917	1043	1043
10	$1026	1026	1026	1026	1174	1174

	14	15	16
MN156.08	$1043	1043	1043
10	$1174	1174	1174

Index by Product Name

Overlay™	
Column Seismic Anchor Bracket	page(s) 9
Controlled Receptacle, 4-Circuit, 15 amp	59
Controlled Receptacle, 4-Circuit, 20 amp	62
Curtain Track	34
Cutout Cover (Package of 6)	54
Glass Mount	31
Light Seal	45
Linear Light	46
Lite Rail	43
Media Mounting Components	41
Media Structure	42
Perforated Metal	35
Performance Wall Cap	7
Performance Wall Cladding	17
Performance Wall Column	10
Performance Wall Power Jumper	63
Performance Wall Seismic Anchor Bracket	8
Performance Wall Structure	5
Power Entry, Ceiling	51
Power Entry, Floor	48
Power Entry, New York - Ceiling	52
Power Entry, New York - Floor	49
Power Harness	55
Receptacle, 4-Circuit, 15 amp	57
Receptacle, 4-Circuit, 20 amp	61
Sliding Glass Door Hardware	32
Spanner	12
Spanner Zone Cladding	26
Spanner Zone Jumper	65
Spanner Zone Structure	25
Toggle Wall Strip Anchor	15
Trellis	37
Wall Fastener	16
Wood Slat	29

Index by Product Number

MN100. Linear Light	page(s) 46
MN140. Power Entry, Floor	48
MN141. Power Entry, New York - Floor	49
MN143. Power Entry, Ceiling	51
MN144. Power Entry, New York - Ceiling	52
MN150. Power Harness	55
MN151. Cutout Cover (Package of 6)	54
MN152. Receptacle, 4-Circuit, 15 amp	57
MN152M Controlled Receptacle, 4-Circuit, 15 amp	59
MN153. Receptacle, 4-Circuit, 20 amp	61
MN153M Controlled Receptacle, 4-Circuit, 20 amp	62
MN155. Performance Wall Power Jumper	63
MN156. Spanner Zone Jumper	65
MN200. Performance Wall Structure	5
MN210. Performance Wall Cladding	17
MN220. Performance Wall Cap	7
MN230. Performance Wall Seismic Anchor Bracket	8
MN240. Column Seismic Anchor Bracket	9
MN300. Performance Wall Column	10
MN400. Spanner	12
MN500. Spanner Zone Structure	25
MN510. Spanner Zone Cladding	26
MN520. Wood Slat	29
MN530. Glass Mount	31
MN540. Sliding Glass Door Hardware	32
MN550. Curtain Track	34
MN560. Perforated Metal	35
MN900. Trellis	37
MN910. Media Mounting Components	41
MN915. Media Structure	42
MN920. Lite Rail	43
MN930. Light Seal	45
X1191. Toggle Wall Strip Anchor	15
X1192. Wall Fastener	16

20-Day or Less/Assigned Lead-Time Order Information

GSA

20-Day or Less and Assigned Lead-Time Programs

20-day or less and assigned lead-time products are designed for established Herman Miller dealers with pre-approved credit.

Products are distributed from multiple manufacturing facilities across the United States. All products and options not designated by an Assigned Lead-Time icon A will ship in 20 business days or less after being acknowledged by Herman Miller. Products and options designated by an A are on the assigned lead-time program and will ship in 20 days, less than 20 days, or more than 20 days from order acknowledgement.

Ordering Procedure

Please place orders through Order Manager. If this is not available to you, place orders through mail or fax. Verbal purchase orders will not be accepted.

Order Entry fax number for Meridian® Filing and Storage:
(616) 846 9236.

Order Entry fax number for all other products:
(616) 654 3085.

For more information, contact your Customer Care representative at: (866) 854 3048 ext 3400.

Shipments and Delivery

Per Herman Miller Terms and Conditions.

Changes and Cancellation

Per Herman Miller Terms and Conditions.

Proprietary Textiles Application Chart — Workspaces

GSA

• *Available*

[A] *Assigned lead-time textile.*
See following page for exception notes.

		Action Office® Panels/Connectors	Action Office B-Style Tackboards	Action Office/Ethospace E-Style Storage	Ethospace Tiles/Connectors	Ethospace/Canvas Office Landscape® Privacy Doors	Canvas Tiles/Extended Width Tiles/Channel Tiles	Canvas B-/E-Style Storage	Canvas Tackboards	Canvas Metal Desk Hutch Back Panel	Canvas Vista™ Movable Insert and Display Unit	OE1 Boundary Agile Wall Tile	OE1 Boundary Project Board and Screens	OE1 Nook Liner/Felt Screen Liner/Storage Trolley Liner	Overlay™ Performance Wall Cladding	Pari™ Screens/Flat Edge Screens/Channel Screens	Renew™ Link Screens	Exclave® Tackable Boards and Stowage Tackable Backdrop	Exclave Video-Friendly Tackable Boards and Stowage Tackable Backdrop	Personal Side Screen	Tu® Wood Storage Cubby Tackboard	Seating
Price Category 1																						
COM	Customer's Own Material [A]	1	1	1	1	1	1	1	1	1	1	1	1		1	1	1	1		1	1	1
2V_ _	Chain	•	•	•	•	•	22	•	•	•	•		•		•	•	•				•	
8T_ _	Crossing (85_ _)	2	2	•	•	•	•	2	•	•		•	•		•	•	•	•	8		•	18
3DE_ _	Dex	6	2	•	•	•	•	2	•	•		•	•		•	•	•	•		•	•	•
95_ _	Gem	2	2	•	•	•	•	2	•	•					•	•				•	•	•
2I_ _	Grasscloth	•	•	•	•	•	•	•	•	•	•		•		•	•	•			•	•	
1MN_ _	Monologue	2	2	•	•	•	•	2	•	•	•		•		•	•	•			•	•	•
5T_ _	Resonance	•	•	•	•	•	•	•	•	•	•				•					•	•	
4SC_ _	Scatter	2	2				•		•	•	•	•	•		•	•	•	•		•	•	•
2M_ _	Silkworm	•	•	•	•	•	•	•	•	•	•				•	•				•	•	
22F_ _	Slant	6	•		•	•	•		•	•	•				•						•	
235_ _	Tailored	•		•	•	•	8	•	•	•	•				•						•	•
1WS_ _	Whisper	2	2	•	•	•	•	2	•	•	•	•	•		•	•	•	•		•	•	•
Price Category 2																						
3AR_ _	Aristo	2	2	•	•	•	•	2	•	•	•	•	•		•	•	•	•		•	•	•
92_ _	Crepe	2	•	•	•	•	•	•	•	•	•	•			•	•		•	8	•		•
3EP_ _	Epic	2	2	•	•	•	•	2	•	•		•	•		•	•	•	•		•	•	•
84_ _	Grosgrain	4		•	•	•	8	•		•	•				•					19	•	
4N_ _	Horizon	2	2	•	•	•	•	•	•	•	•				•	•				•	•	
1LM_ _	Loom	2	2	•		•	•	•	•	•		•	•		•	•	•	•				•
1HA_ _	Medley	2	2	•	•	•	•	•	•	•	•	•	•		•	•	•	•	8	•		•
4ME_ _	Mellow	2	2	•	•	•	•	2	•	•	•	•	•		•	•	•	•		•	•	•
3RA _	Rain	•	•	•	•	•	•	•	•	•	•	•	•		•	•	•	•		•	•	
3SL_ _	Sequel			2				2														•
4TE_ _	Terra	2	2	•	•	•	•	2	•	•	•	•	•		•	•	•	•		•	•	•
3TW_ _	Twine	•	•	•	21	•	•	•	•	•	•	•	•		•	•	•	•		•	•	
8R_ _	Twist (5S_ _)	5	2	•	•	•	•	2	•	•	•		•		•	•	•			•	•	18
Price Category 3																						
47_ _	Ground Cloth®	•	•	•	•	•	•	•	•	•	•	•	•		•	•	•	•	8	•	•	
8L_ _	Savannah	•	•	•	•	•	•	•	•	•	•				•						•	
8W_ _	Strands	•	•	•	•	•	•	•	•	•			•		•	•	•			•	•	

continued on next page

Proprietary Textiles Application Chart — Workspaces

continued

GSA

	Action Office® Panels/Connectors	Action Office B-Style Tackboards	Action Office/Ethospace E-Style Storage	Ethospace Tiles/Connectors	Ethospace/Canvas Office Landscape® Privacy Doors	Canvas Tiles/Extended Width Tiles/Channel Tiles	Canvas B-/E-Style Storage	Canvas Tackboards	Canvas Metal Desk Hutch Back Panel	Canvas Vista™ Movable Insert and Display Unit	OE1 Boundary Agile Wall Tile	OE1 Boundary Project Board and Screens	OE1 Nook Liner/Felt Screen Liner/Storage Trolley Liner	Overlay™ Performance Wall Cladding	Pari™ Screens/Flat Edge Screens/Channel Screens	Renew™ Link Screens	Exclave® Tackable Boards and Stowage Tackable Backdrop	Exclave Video-Friendly Tackable Boards and Stowage Tackable Backdrop	Personal Side Screen	Tu® Wood Storage Cubby Tackboard	Seating
Price Category 4																					
2X_ _ Glisten	•	•	•	•	•	•	•	•	•	•				•		•				•	
Price Category 5																					
14A_ _ Hopsak	2	2	•	•		•	2	•	•	•	•			•			•			•	•
Price Category 6																					
No fabrics available at this time.																					

1 *Refer to price book appendices and Omni for COM information.*
2 *Available on all products except 54" and 60" wide.*
4 *Not available on Action Office (AO®) acoustical panels.*
5 *(8R_ _), (8T_ _), (85_ _), and (5S_ _) not available on AO acoustical panels and not available on 54"- or 60"-wide products.*
6 *Not available on Action Office (AO®) connectors, cable management, and spacers.*
8 *Available in select colors. See the "Proprietary Textile Colors — Workspaces" appendix.*
18 *Available on seating products in select colors. See the "Proprietary Textile Colors — Seating" appendix.*
19 *Not available in Grosgrain (84_ _) fabric color 8405.*
22 *Not available as railroaded application option for Chain and Moire on Canvas extended width tiles.*

Application Note: Herman Miller cannot guarantee material/pattern alignment in adjacent products. For example, a fabric's pattern may not align from one screen to the next, or from one panel to the next.

GSA

Price Category 1

Customer's Own Material	
See Order Information in Appendices.	
Assigned lead-time textile. A	

Chain	
66" wide	
100% recycled polyester	
2V01	Pearl
2V02	Oyster
2V03	Wheat
2V04	Linen
2V05	Wicker
2V06	Bamboo
2V07	Sage
2V08	Spring Wood
2V09	Iceberg

Crossing	
54" wide	
86% antimony-free polyester	
14% polyester	
8T03	Wicker *
8T04	Porcelain *
8T05	Warm Grey *
8T10	Tomato
8T13	Green Apple
8T16	Periwinkle
8T17	Cerulean
8T18	Indigo
8T19	Shale *
8T22	Tin *
8T23	Graphite
8T24	Black

Crossing	
For systems products only.	
54" wide	
86% antimony-free polyester	
14% polyester	
8501	Ivory *
8502	Oyster *

* Crossing colors available on Exclave® Video-friendly Tackable Boards and Stowage Tackable Backdrop

Dex	
54" wide	
100% recycled polyester	
3DE01	Frost
3DE02	Silver Pine
3DE03	Stone
3DE04	Shale
3DE05	Charcoal
3DE06	Gossamer
3DE07	Pine

Gem	
54" wide	
100% antimony-free polyester	
9502	Tangerine
9503	Red
9507	Twilight
9508	Bayou
9510	Berry Blue
9511	Aqua Green
9512	Green Apple
9514	Black
9515	Slate Grey
9516	Fog

Grasscloth	
66" wide	
100% recycled polyester	
2I01	Silver Birch
2I02	Pampas
2I03	Sedge
2I07	Lea
2I08	Taro
2I09	Steam Grey
2I13	Gravel

Monologue	
54" wide	
56% recycled polyester	
44% polyester	
1MN01	Linen
1MN02	Alabaster
1MN03	Truffle
1MN04	Folkstone
1MN05	Silver Pine
1MN06	Slate
1MN07	Seed
1MN08	Yellow Oxide
1MN09	Persimmon
1MN10	Tundra
1MN11	Meadow
1MN12	Blue Sky
1MN13	Blue Spruce
1MN14	Deep Sea

Resonance	
66" wide	
100% polyester	
5T04	Greige
5T05	Porcelain
5T06	Alabaster
5T15	Iris
5T28	Sugar
5T47	Tobacco
5T54	Saltbush
5T57	Seed
5T58	Sepia
5T60	Iceberg
5T65	Red
5T67	Boysenberry
5T68	Pistachio
5T69	Green Apple
5T71	Jade
5T72	Blue Green
5T74	Twilight

Scatter	
54" wide	
100% recycled polyester, with 26% ocean bound plastic	
4SC01	Alpine
4SC02	Fog
4SC03	Shale
4SC04	Persimmon
4SC05	Red Violet
4SC06	Lime Zest
4SC07	Olive
4SC08	Glacier
4SC09	Blue Sky
4SC10	Lagoon
4SC11	Slate Grey
4SC12	Blue Black

Price category 1 continued on next page

Proprietary Textile Colors — Workspaces

continued

GSA

Price Category 1

continued

Silkworm	
66” wide	
58% recycled polyester	
42% polyester	
2M01	Cocoon
2M02	Pongee
2M03	Saffron
2M04	Tussah
2M05	Ceylon
2M06	Jasmine
2M07	Shale
2M08	Monsoon

Slant	
66” wide	
51% polyester	
49% recycled polyester	
22F04	Pesto
22F06	Neptune
22F07	Blueberry
22F10	Pumpkin
22F12	Silver Birch
22F13	Bluestone
22F15	Shale

Tailored	
54” wide	
56% polyester	
44% recycled polyester	
23501	Studio White *
23502	Sugar
23503	Tomato
23504	Orchid
23505	Boysenberry
23506	Chive
23507	Bluegrass
23508	Cobalt
23509	Cadet
23510	Fog
23511	Graphite
23512	Black
23513	Coffee

* Color not available on Canvas Tiles.

Whisper	
54” wide	
73% recycled polyester	
27% polyester,	
with 11.3% ocean bound plastic	
1WS01	Sand Dollar
1WS02	Pebble
1WS03	Silver Birch
1WS04	Iceberg
1WS05	Silver Pine
1WS06	Carbon
1WS07	Cumin
1WS08	Adobe
1WS09	Strawberry
1WS10	Blush
1WS11	Eggplant
1WS12	Willow
1WS13	Sea Grass
1WS14	Pool
1WS15	Blueberry
1WS16	Glacier
1WS17	Grey
1WS18	Canyon

Price Category 2

Aristo	
54” wide	
88% recycled polyester	
12% polyester	
Acrylic backing	
3AR01	Forest Moss
3AR02	Light Brindle
3AR03	Mink
3AR04	Copper
3AR05	Adobe
3AR06	Cherry
3AR07	Lilac
3AR08	Green Apple
3AR09	Surf
3AR10	Waterfall
3AR11	Cadet
3AR12	Tin
3AR13	Pewter
3AR14	Grey Brindle
3AR15	Grey Black

Crepe	
54” wide	
100% recycled polyester,	
with 43.6% ocean bound plastic	
9201	Licorice
9203	Smoke
9207	Cherry
9223	Cadet
9241	Beachglass
9249	Stone *
9251	Fog *
9252	Slate Grey
9261	Shale
9262	Graphite
9265	Mineral
9266	Persimmon
9267	Juniper
9268	Glacier
9269	Cascade
9270	Navy

* Colors available on Exclave® Video-friendly Tackable Boards and Stowage Tackable Backdrop

Price category 2 continued on next page

Price Category 2
continued

Epic	
54” wide	
56% recycled polyester	
44% polyester	
Acrylic backing	
3EP01	Alabaster
3EP02	Smoke
3EP03	Falcon
3EP04	Citrus Spring
3EP05	Copper
3EP06	Urban Orange
3EP07	Poppy
3EP08	Wild Plum
3EP09	Sugar Plum
3EP10	Clover
3EP11	Loden
3EP12	Everglade
3EP13	Mist
3EP14	Peacock
3EP15	Cadet
3EP16	Indigo
3EP17	Spring Wood
3EP18	Grey Brindle
3EP19	Seed
3EP20	Carbon Dark

Grosgrain	
66” wide	
100% recycled polyester	
8402	White Ash
8404	Khaki
8405	Oyster *
8408	Spa Blue
8409	Bud
8411	Bayou
8412	Tin

* Color not available on Canvas Dock Mounted Screens, and Thrive® Personal Side Screen.

Horizon	
54” wide	
65% antimony-free polyester	
35% polyester	
4N01	Rye Grass
4N02	Sugar Pine
4N03	Silver Pine
4N04	White Ash
4N05	Spring Wood
4N06	Tamarack
4N07	Mushroom
4N08	Haystack
4N09	Oat Grass
4N10	Forest Moss
4N11	Hickory
4N12	Beech Nut
4N13	Pine Cone
4N14	Poplar
4N15	Elderberry

Loom	
54” wide	
100% polyester	
1LM01	Linen
1LM03	Brick and Mortar
1LM04	Salt and Pepper
1LM05	Black
1LM08	Wild Berry
1LM09	Loden
1LM10	Jade
1LM11	Deep Sea

Medley	
54” wide	
100% polyester	
1HA01	Stone *
1HA02	Trail
1HA03	Charcoal
1HA04	Cinder
1HA05	Citrus
1HA06	Papaya
1HA07	Chutney
1HA08	Tundra
1HA09	Feather Grey *
1HA10	Chartreuse
1HA11	Loden
1HA12	Peacock
1HA13	Bayou *
1HA14	Blue Grotto
1HA15	Blueberry
1HA22	Khaki
1HA23	Pewter
1HA24	Yellow Oxide
1HA25	Vintage Rose
1HA26	Raspberry
1HA27	Acai Berry

* Colors available on Exclave® Video-friendly Tackable Boards and Stowage Tackable Backdrop

Mellow	
54” wide	
100% recycled polyester, with 16% ocean bound plastic	
4ME01	Mineral
4ME02	Pewter
4ME03	Wisteria
4ME04	Olive
4ME05	Glacier
4ME06	Oceanside
4ME07	Charcoal

Rain	
66” wide	
100% recycled polyester	
3RA01	Iceberg
3RA02	Frost
3RA03	Pewter
3RA04	Graphite
3RA05	Warm White
3RA06	Linen
3RA07	Rye
3RA08	Light Brindle

Sequel	
54” wide	
100% vinyl	
100% polyester knit backing	
Resilience® finish	
3SL01	White
3SL02	Pebble
3SL03	Mushroom
3SL04	Stone
3SL05	Chestnut
3SL06	Rattan
3SL07	Black Cherry
3SL08	Tundra
3SL09	Seal
3SL10	Blue Fog
3SL11	Folkstone
3SL12	Shale
3SL13	Slate Grey
3SL14	Charcoal
3SL15	Carbon Dark

Price category 2 continued on next page

GSA

Price Category 2
continued

Terra
54” wide
100% post-consumer recycled biodegradable polyester *

4TE01	Spring Wood
4TE02	Zinc
4TE03	Pine Cone
4TE04	Charcoal

* 1% biodegradation in 1,278 days under ASTM D5511 conditions. No evidence of further degradation.

Twine
66” wide
100% recycled polyester

3TW01	Silver Birch
3TW02	Ivory
3TW03	Alabaster
3TW04	Bamboo
3TW05	Iceberg
3TW06	Charcoal
3TW07	Feather Grey
3TW08	Shale

Twist
54” wide
80% antimony-free polyester
13% recycled polyester
7% polyester

8R05	Wicker
8R10	Poppy
8R14	Tin
8R15	Shale
8R16	Graphite
8R17	Birch
8R18	Sepia
8R22	Blueberry
8R23	Green Apple
8R26	Gunmetal
8R27	Cinder
8R28	Citrus
8R29	Pekoe
8R30	Tangerine
8R31	Red Plum
8R32	Wisteria
8R33	Forest
8R34	Jade Dark
8R35	Waterfall
8R36	Midnight Blue
8R37	Carbon Dark

Twist
For systems products only.
54” wide
80% antimony-free polyester
13% recycled polyester
7% polyester

5S01	Pearl
5S02	Ivory
5S03	Oyster

Price Category 3

Ground Cloth®
66” wide
100% polyester

4701	Vapor Grey
4721	Warm White *
4722	Fog *
4723	Straw *
4724	Red Orange *
4725	Wild Berry *
4726	Green Apple *
4727	Caribbean *
4728	Midnight *
4729	Cappuccino *

* Colors available on Exclave® Video-friendly Tackable Boards and Stowage Tackable Backdrop

Savannah
66” wide
76% recycled polyester
24% polypropylene

8L02	Oyster
8L04	Jute
8L05	Bamboo
8L06	Metal
8L07	Linen
8L10	Frost
8L11	Shale

Strands
66” wide
100% recycled polyester

8W01	Pebble
8W02	Porcelain
8W03	Taupe
8W04	Honey
8W05	Khaki
8W06	Rye
8W07	Wicker
8W08	Tin
8W09	Cool Grey

Price Category 4

Glisten
66” wide
84% polyester
16% recycled polyester

2X02	Rye
2X05	Iceberg
2X09	Pewter
2X10	Ash

GSA

Price Category 5

Hopsak	
56” wide	
100% recycled polyester	
14A20	Black
14A22	Raw Umber Dark
14A26	Grey Blue Dark
14A30	Sepia Dark
14A38	Emerald Dark
14A39	Yellow Dark
14A40	Orange
14A41	Sienna
14A42	Olive Green Dark
14A43	Crimson
14A44	Crimson Dark Dark
14A45	Violet Dark
14A46	Pink Dark Dark
14A47	Ultramarine Dark
14A48	Cobalt Blue
14A49	Terra Cotta
14A50	Ochre Dark

Price Category 6

No fabrics available at this time.

Maharam Application Chart — Workspaces

GSA

• *Available*
Maharam textiles are on assigned lead times. A
See below for exception notes.

	Action Office® Panels/Connectors	Action Office B-Style Tackboards	Action Office/Ethospace E-Style Storage	Ethospace Tiles/Connectors	Ethospace/Canvas Office Landscape® Privacy Doors	Canvas Tiles/Extended Width Tiles/Channel Tiles	Canvas B-/E-Style Storage	Canvas Tackboards	Canvas Metal Desk Hutch Back Panel	Canvas Vista™ Movable Insert and Display Unit	OE1 Boundary Agile Wall Tile	OE1 Boundary Project Board and Screens	Overlay™ Performance Wall Cladding	Pari™ Screens/Flat Edge Screens/Channel Screens	Renew™ Link Screens	Exclave® Tackable Boards and Stowage Tackable Backdrop	Personal Side Screen
Price Category 1																	
No fabrics available at this time.																	
Price Category 2																	
ZMA_ _ Metaphor - Maharam	2	2	2	2	•	•	2	•		•	•		•			•	
8I1_ _ Muse - Maharam	2	2	2	•		•	2	•		•	•	•	•	•	•	•	•
Price Category 3																	
ZM2_ _ Meld - Maharam	2	2	•	•	•	•	•	•	•	•	•	•	•	•	•	•	•
Price Category 4																	
No fabrics available at this time.																	
Price Category 5																	
40G_ _ Method - Maharam	2	2	2	2	•	•	2	•	•	•	•	•	•	•	•	•	•
ZNC_ _ Nico - Maharam	2	2	2	•	•	•	2	•	•	•	•	•	•	•	•	•	•
Price Category 6-9																	
No fabrics available at this time.																	
Price Category A																	
No fabrics available at this time.																	
Price Category B																	
VQ_ _ Crisp - Maharam	5	•	•	12		•	•	•	•	•			•				
TL_ _ Messenger - Maharam *		2	•	12	•	•	2	•	•	•			•	•			
Price Category C																	
Z27_ _ Manner - Maharam	2	2	2	•		•	2	•	•	•			•	•			
Z3_ _ Metric - Maharam	2	2			•	•		•	•	•			•	•			
Price Category D																	
No fabrics available at this time.																	
Price Category E																	
TT_ _ Parallel - Maharam	7	•		•	•	•	18	•	•	•			•				
Price Category F																	
No fabrics available at this time.																	
Price Category G-K																	
No fabrics available at this time.																	

** Available in select colors on 20-day lead-time.*
Refer to "Maharam Colors - Workspaces" for 20-day colors.

2 Available on all products except 54" and 60" wide.
5 Not available on AO partial-glazed panels.
7 Not available on AO or Prospects acoustical panels; not available on AO2 cable management panel face.
12 Not available on Ethospace tackable tiles.
18 Not available on Canvas E-style flipper doors.

Application Note: Herman Miller cannot guarantee material/ pattern alignment in adjacent products. For example, a fabric's pattern may not align from one screen to the next, or from one panel to the next.

Maharam Colors — Workspaces

GSA

Price Category 1

No fabrics available at this time.

Price Category 2

Metaphor – Maharam	
54” wide	
100% polyester	
Acrylic backing	
ZMA01/466553-001	Afterfeather
ZMA02/466553-002	Moonflower
ZMA03/466553-003	Handcraft
ZMA04/466553-004	Crossroad
ZMA05/466553-005	Chondrite
ZMA06/466553-006	Detective
ZMA07/466553-007	Steamship
ZMA08/466553-008	Electricity
ZMA09/466553-009	Takeoff
ZMA10/466553-010	Parachute
ZMA11/466553-011	Blueshift
ZMA12/466553-012	Dockyard
ZMA13/466553-013	Bathe
ZMA14/466553-014	Icebound
ZMA15/466553-015	Thermosphere
ZMA16/466553-016	Aboard
ZMA17/466553-017	Agateware
ZMA18/466553-018	Homeland
ZMA19/466553-019	Rockfall
ZMA20/466553-020	Undergrowth
ZMA21/466553-021	Gremolata
ZMA22/466553-022	Patina
ZMA23/466553-023	Sylvan
ZMA24/466553-024	Outfield
ZMA25/466553-025	Windbreak
ZMA26/466553-026	Saguaro
ZMA27/466553-027	Barnwood
ZMA28/466553-028	Cookshop
ZMA29/466553-029	Amandine
ZMA30/466553-030	Bodhran
ZMA31/466553-031	Centerstage
ZMA32/466553-032	Focaccia
ZMA33/466553-033	Bumblebee
ZMA34/466553-034	Microbrew
ZMA35/466553-035	Sauna
ZMA36/466553-036	Gazebo
ZMA37/466553-037	Pirouette
ZMA38/466553-038	Heartbeat
ZMA39/466553-039	Shino
ZMA40/466553-040	Sunrise
ZMA41/466553-041	Florist

Metaphor *continued*	
ZMA42/466553-042	Beadwork
ZMA43/466553-043	Framboise
ZMA44/466553-044	Wisteria
ZMA45/466553-045	Warrior

Muse – Maharam	
54” wide	
100% post-consumer recycled polyester	
8I101/466487-001	Crescendo
8I102/466487-002	Resonate
8I103/466487-003	Runway
8I104/466487-004	Ascend
8I105/466487-005	Veil
8I106/466487-006	Refresh
8I107/466487-007	Clear
8I108/466487-008	Fantasy
8I109/466487-009	Miso
8I110/466487-010	Compass
8I111/466487-011	Bergamot
8I112/466487-012	Grasshopper
8I113/466487-013	Goal
8I114/466487-014	Mistletoe
8I115/466487-015	Seaglass
8I116/466487-016	Frigid
8I117/466487-017	Riverbend
8I118/466487-018	Noble
8I119/466487-019	Pulsar
8I120/466487-020	Velella
8I121/466487-021	Sailboat
8I122/466487-022	Sparse
8I123/466487-023	Vase
8I124/466487-024	Haven
8I125/466487-025	Mead
8I126/466487-026	Neat
8I127/466487-027	Jovial
8I128/466487-028	Theater
8I129/466487-029	Poinsettia
8I130/466487-030	Celebrate
8I131/466487-031	Spectacle

Price Category 3

Meld – Maharam	
54” wide	
68% post-consumer recycled polyester	
32% polyester	
PFOA-Free stain resistant	
ZM201/466387-201	Vast
ZM202/466387-202	Panda **
ZM203/466387-203	Skyline *
ZM204/466387-204	Knight **
ZM205/466387-205	Quill **
ZM206/466387-206	Pipe
ZM207/466387-207	Grate *
ZM208/466387-208	Gloss
ZM209/466387-209	Bulb
ZM210/466387-210	Bride
ZM211/466387-211	Stark
ZM212/466387-212	Seashell
ZM213/466387-213	Antler
ZM214/466387-214	Crater *
ZM215/466387-215	Perennial
ZM216/466387-216	Mulberry
ZM217/466387-217	Fuchsia *
ZM218/466387-218	Amethyst *
ZM219/466387-219	Merlot
ZM220/466387-220	Magma *
ZM221/466387-221	Rooster
ZM222/466387-222	Heat *
ZM223/466387-223	Clementine
ZM224/466387-224	Fox
ZM225/466387-225	Kiss *
ZM226/466387-226	Bare
ZM227/466387-227	Blonde
ZM228/466387-228	Mimosa
ZM229/466387-229	Comet *
ZM230/466387-230	Honeydew
ZM231/466387-231	Wild *
ZM232/466387-232	Vine
ZM233/466387-233	Seed
ZM234/466387-234	Kale *

* Colors available on 20-day lead time.
** Colors available on 10-day lead time.

Price category 3 continued on next page

- Maharam textiles are on assigned lead times. A
- Fabric numbers are listed as Herman Miller fabric number/Maharam fabric number.

GSA

Price Category 3
continued

Meld *continued*	
ZM235/466387-235	Waterfall *
ZM236/466387-236	Nordic *
ZM237/466387-237	Reef *
ZM238/466387-238	Wave
ZM239/466387-239	Isle **
ZM240/466387-240	Creek
ZM241/466387-241	Mariner *
ZM242/466387-242	Globe
ZM243/466387-243	Spa

* Colors available on 20-day lead time.
** Colors available on 10-day lead time.

Price Category 4

No fabrics available at this time.

Price Category 5

Method – Maharam	
54” wide	
100% recycled polyester	
with 12% ocean-bound plastic	
40G01/466579-001	Inspire
40G02/466579-002	Rhea
40G03/466579-003	Noise
40G04/466579-004	Speedway
40G05/466579-005	Villanelle
40G06/466579-006	Maestro
40G07/466579-007	Destiny
40G08/466579-008	Possess
40G09/466579-009	Waterside
40G10/466579-010	Relax
40G11/466579-011	Delightful
40G12/466579-012	Parrotlet
40G13/466579-013	Verdurous
40G14/466579-014	Bosky
40G15/466579-015	Acreage
40G16/466579-016	Allude
40G17/466579-017	Tweed
40G18/466579-018	Korma
40G19/466579-019	Fossilize
40G20/466579-020	Cattail
40G21/466579-021	Shortcake
40G22/466579-022	Racecar
40G23/466579-023	Courtship
40G24/466579-024	Jam
40G25/466579-025	Sparrow

Nico - Maharam	
54” wide	
63% wool	
21% polyester	
16% solution-dyed nylon	
ZNC01/466564-001	Alcazar
ZNC02/466564-002	Ironclad
ZNC03/466564-003	Tune
ZNC04/466564-004	Bridegroom
ZNC05/466564-005	Diode
ZNC06/466564-006	Jest
ZNC07/466564-007	Sanctuary
ZNC08/466564-008	Aquarius
ZNC09/466564-009	Houseboat
ZNC10/466564-010	Olympian
ZNC11/466564-011	Tennis
ZNC12/466564-012	Dressage
ZNC13/466564-013	Zing
ZNC14/466564-014	Bitterroot
ZNC15/466564-015	Gemini
ZNC16/466564-016	Posh
ZNC17/466564-017	Sizzle
ZNC18/466564-018	Cheerful
ZNC19/466564-019	Watermelon
ZNC20/466564-020	Toucan
ZNC21/466564-021	Rosin
ZNC22/466564-022	Jousting
ZNC23/466564-023	Jojoba
ZNC24/466564-024	Dromedary
ZNC25/466564-025	Toasty
ZNC26/466564-026	Casaba
ZNC27/466564-027	Greenhouse
ZNC28/466564-028	Sibyl
ZNC29/466564-029	Spearmint
ZNC30/466564-030	Pothos
ZNC31/466564-031	Calathea
ZNC32/466564-032	Landscape
ZNC33/466564-033	Espalier
ZNC34/466564-034	Gecko
ZNC35/466564-035	Meditation

- Maharam textiles are on assigned lead times. A
- Fabric numbers are listed as Herman Miller fabric number/Maharam fabric number.

Price Category 6-9

No fabrics available at this time.

Price Category A

No fabrics available at this time.

Price Category B

Crisp – Maharam	
66” wide	
100% polyester	
VQ02/901420-002	Oyster
VQ13/901420-013	Admiral
VQ14/901420-014	Thunder
VQ21/901420-021	Graphite
VQ22/901420-022	Lychee
VQ23/901420-023	Persimmon
VQ24/901420-024	Kimchi
VQ25/901420-025	Marigold
VQ26/901420-026	Brut
VQ29/901420-029	Surf
VQ30/901420-030	Marble
VQ31/901420-031	Boulder
VQ32/901420-032	Bell
VQ33/901420-033	Ferry
VQ34/901420-034	Sapphire
VQ35/901420-035	Carbon
VQ36/901420-036	Owl
VQ37/901420-037	Agate

Messenger — Maharam	
54” wide	
78% recycled polyester	
15% polyester	
7% nylon	
TI07/458640-007	Shadow
TI08/458640-008	Bayou *
TI24/458640-024	Poppy
TI25/458640-025	Mao
TI29/458640-029	Onyx *
TI31/458640-031	Cloud *
TI38/458640-038	Depth *
TI40/458640-040	Nile *
TI41/458640-041	Azure *
TI45/458640-045	Cactus *

Messenger *continued*	
TI46/458640-046	Ice *
TI48/458640-048	Neon
TI50/458640-050	Hydrangea
TI53/458640-053	Tangelo
TI54/458640-054	Lumine *
TI58/458640-058	Snow
TI60/458640-060	Peridot
TI61/458640-061	Capri *
TI62/458640-062	Ultramarine
TI63/458640-063	Squall
TI66/458640-066	Cassis
TI67/458640-067	Aster
TI69/458640-069	Cherry
TI70/458640-070	Vibrant
TI71/458640-071	Satsuma *
TI72/458640-072	Maize
TI76/458640-076	Fossil
TI77/458640-077	Ash
TI78/458640-078	Tusk
TI79/458640-079	Oyster
TI81/458640-081	Husk
TI84/458640-084	Robust
TI85/458640-085	Beyond
TI86/458640-086	Voyage *
TI87/458640-087	Everglade
TI89/458640-089	Blanch
TI90/458640-090	Longspur
TI91/458640-091	Vireo
TI92/458640-092	Dipper
TI93/458640-093	Gale
TI94/458640-094	Hunter
TI95/458640-095	Lime
TI96/458640-096	Apple
TI97/458640-097	Krill
TI98/458640-098	Catalyst

* Colors available on 20-day lead time.

- Maharam textiles are on assigned lead times. A
- Fabric numbers are listed as Herman Miller fabric number/Maharam fabric number.

GSA

Price Category C

Manner - Maharam	
54” wide	
100% recycled polyester	
Z2701/466177-001	Magic
Z2702/466177-002	Carob
Z2703/466177-003	Porpoise
Z2704/466177-004	Flint
Z2705/466177-005	Hush
Z2706/466177-006	Nuance
Z2711/466177-011	Ember
Z2712/466177-012	Wagon
Z2713/466177-013	Ablaze
Z2714/466177-014	Peel
Z2716/466177-016	Butterscotch
Z2717/466177-017	Harvest
Z2720/466177-020	Parakeet
Z2722/466177-022	Aquatic
Z2723/466177-023	Cottage
Z2724/466177-024	Dahlia
Z2725/466177-025	Vivid
Z2726/466177-026	Basin
Z2727/466177-027	Schooner
Z2728/466177-028	Slope
Z2729/466177-029	Silverpoint
Z2730/466177-030	Lattice
Z2731/466177-031	Smoky
Z2732/466177-032	Magnetic
Z2733/466177-033	Woad
Z2734/466177-034	Resolute
Z2735/466177-035	Cruise
Z2736/466177-036	Atmospheric
Z2737/466177-037	Cloudburst
Z2738/466177-038	Tidewater
Z2739/466177-039	Firth
Z2740/466177-040	Oceanside
Z2741/466177-041	Grandeur
Z2742/466177-042	Comfort
Z2743/466177-043	Dill
Z2744/466177-044	Poplar
Z2745/466177-045	Citronella
Z2746/466177-046	Passerine

Manner *continued*	
Z2747/466177-047	Southwest
Z2748/466177-048	Roseate
Z2749/466177-049	Charisma
Z2750/466177-050	Siltstone
Z2751/466177-051	Kimono
Z2752/466177-052	Valiant
Z2753/466177-053	Baroness

Metric – Maharam	
54” wide	
51% recycled polyester	
49% polyester	
Z302/466014-002	Fog
Z303/466014-003	Fleece
Z312/466014-012	Cardinal
Z313/466014-013	Lava
Z318/466014-018	Pollen
Z320/466014-020	Alligator
Z323/466014-023	Tar
Z324/466014-024	Anchor
Z326/466014-026	Admiral
Z327/466014-027	Seaport
Z328/466014-028	Scuba
Z329/466014-029	Skate
Z330/466014-030	Hopscotch
Z331/466014-031	Film
Z332/466014-032	Whale
Z333/466014-033	Downpour
Z334/466014-034	Midday
Z335/466014-035	Talisman
Z336/466014-036	Hedgerow
Z337/466014-037	Snorkel
Z338/466014-038	Highway
Z339/466014-039	Canary
Z340/466014-040	Sunny
Z341/466014-041	Aztec
Z342/466014-042	Fruit
Z343/466014-043	Galah
Z344/466014-044	Kiln
Z345/466014-045	Moth

Price Category D

No fabrics available at this time.

Price Category E

Parallel — Maharam	
66” wide	
100% recycled polyester	
TT01/901180-001	Chalk
TT02/901180-002	Argent
TT03/901180-003	Fog
TT22/901180-022	Sterling
TT23/901180-023	Linen
TT24/901180-024	Pea
TT27/901180-027	Boulder
TT28/901180-028	Stream
TT29/901180-029	Shiitake
TT30/901180-030	Wafer
TT31/901180-031	Plank
TT32/901180-032	Brandy
TT33/901180-033	Crater
TT36/901180-036	Quail

- Maharam textiles are on assigned lead times. A
- Fabric numbers are listed as Herman Miller fabric number/Maharam fabric number.

GSA

Price Category F-K

No fabrics available at this time.

- Maharam textiles are on assigned lead times. A
- Fabric numbers are listed as Herman Miller fabric number/Maharam fabric number.

For more information about our products and services or to see a list of dealers, please visit us at HermanMiller.com or call (800) 851 1196.

© 2023 Herman Miller, Inc., Zeeland, Michigan

Distribution Rights

Working together since 1956, Herman Miller and Vitra are the authentic sources of designs by Charles and Ray Eames, Alexander Girard, and George Nelson. All the designs shown in this book are protected by law. Herman Miller has obtained all rights to make and sell these designs. Also, Herman Miller holds exclusive worldwide manufacturing and distribution rights for these products with the following exceptions:

Charles and Ray Eames, George Nelson, and Alexander Girard—Worldwide distribution rights for furniture in all areas except Europe and the Middle East. For those areas, please contact Vitra.

Isamu Noguchi—Worldwide distribution rights for the Noguchi Rudder Table. Distribution rights for the Noguchi Table in North America and Central America only. For all other areas, please contact Vitra.

Magis—Exclusive distribution rights in the US and Canada. For all other areas, please contact Magis.

® HermanMiller, ☻, Action Office, Aeron, Aside, Canvas Office Landscape, Caper, Cosm, Co/Struc, Eames, Embody, Ethospace, Exclave, Fine-Tune, FlexFront, Formcoat, Ground Cloth, Layout Studio, Lino, Maharam, Meridian, Mirra, Motia, Nelson, Pellicle, Perspectives, Plex, PostureFit, PostureFit SL, Resolve, Sayl, Setu, Tu, Verus, and Y-Tower are among the registered trademarks of Herman Miller, Inc., and its owned subsidiaries.

™ AireWeave, Bubbletack, Cellular Suspension, Commend, Compass, Connect, DOT, Durawrap, Everywhere, Flex-Edge, Headway, Hopsak 2, Intent, Iota, Keyless Entry, Latitude, Lyris 2, Mora, Multiscrim, Nevi, Overlay, Renew, Stackable, Swoop, Thrive, TriFlex, Twist, Valor, Vista and Zeph are among the trademarks of Herman Miller, Inc., and its owned subsidiaries.

Chemsurf® is a registered trademark of Wilsonart International.

Corian® is a registered trademark of E.I. du Pont de Nemours and Company Corporation.

FLEXNET™ is a trademark of Milliken & Company.

Floor Saver Glide® is a registered trademark of Carpin Manufacturing, Inc.

Forest Stewardship Council® is a registered trademark of the Forest Stewardship Council A.C. (FSC). We are FSC® certified (FSC® C102895).

FSC® is a registered trademark of the Forest Stewardship Council A.C. (FSC).

Geiger® is a registered trademark of Geiger International.

MicrobeCare™ is a trademark of Parasol Medical LLC.

Microsoft® and Natural® Keyboard are registered trademarks of Microsoft Corporation.

Place Textiles® is a registered trademark of Place Textiles.