ELKAY®
SPECIFICATIONS

Elkay Single Hole 8-5/8" Deck Mount Faucet with Gooseneck Spout Lever Handle on Right Side Chrome
Model(s) LKD20858C

PRODUCT SPECIFICATIONS

Elkay Single Hole 8-5/8" Deck Mount Faucet with Gooseneck Spout Lever Handle on Right Side Chrome. Faucet has a flow rate of 1.5 GPM, and is made of Chrome-plated Brass material, with a Quarter Turn Ceramic Disc - Cold valve. Faucet requires 1 faucet holes.

Mounting Type:	Deck Mount
Special Features:	Solid Brass Construction
Finish:	Chrome (CR)
Handle Type:	2.6" Lever Handle
Deck Clearance:	5-1/2"
Spout Reach:	5"
Spout Height:	8-5/8"
Hole Drillings:	1
Material:	Chrome-plated Brass
Valve Type:	Quarter Turn Ceramic Disc - Cold
Flow Rate:	1.5 GPM
Faucet Hole Size (min):	1-1/2"
Countertop Thickness:	1-1/8
Spout Swing Rotation:	0°
Spout Type:	Gooseneck


Chrome (CR)



A Century of Tradition and Quality.
For more than 100 years, Elkay has been making innovative products and providing exceptional customer care. We take pride in offering plumbing products that make life easier, inspire change and leave the world a better place.

Product Compliance: ADA & ICC A117.1
ASME A112.18.1/CSA B125.1
CEC
NSF 372 (lead free)
NSF 61 (Q≤1)

Complies with ADA & ICC A117.1 accessibility requirements when installed according to the requirements outlined in these standards.

Clean and Care Manual (PDF)
Installation Instructions (PDF) - 0000001000
Warranty (PDF)

PART:_____QTY: _____
PROJECT:_____
CONTACT:_____
DATE:_____
NOTES:_____
APPROVAL:

In keeping with our policy of continuing product improvement, Elkay reserves the right to change product specifications without notice. Please visit elkay.com for the most current version of Elkay product specification sheets. This specification describes an Elkay product with design, quality, and functional benefits to the user. When making a comparison of other producers' offerings, be certain these features are not overlooked.

Elkay Single Hole 8-5/8" Deck Mount Faucet with Gooseneck Spout Lever Handle on Right Side Chrome

Model(s) LKD20858C

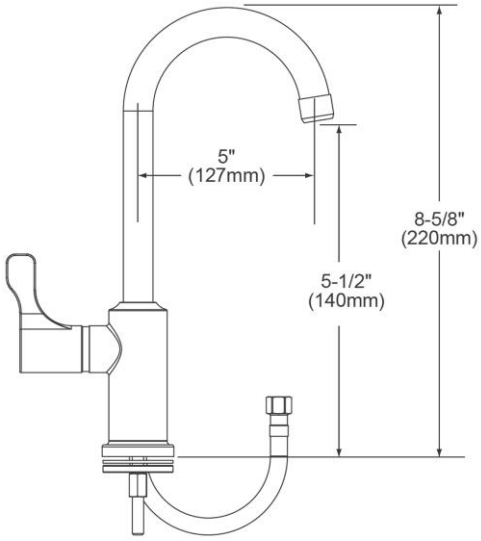

In keeping with our policy of continuing product improvement, Elkay reserves the right to change product specifications without notice. Please visit elkay.com for the most current version of Elkay product specification sheets. This specification describes an Elkay product with design, quality, and functional benefits to the user. When making a comparison of other producers' offerings, be certain these features are not overlooked.

Elkay Single Hole 8-5/8" Deck Mount Faucet with Gooseneck Spout Lever Handle on Right Side Chrome

Model(s) LKD20858C

ITEM	PART #	DESCRIPTION
1	0000000680	2.6” Blade Handle
2	0000000682	Cartridges
3	0000000688	Aerator

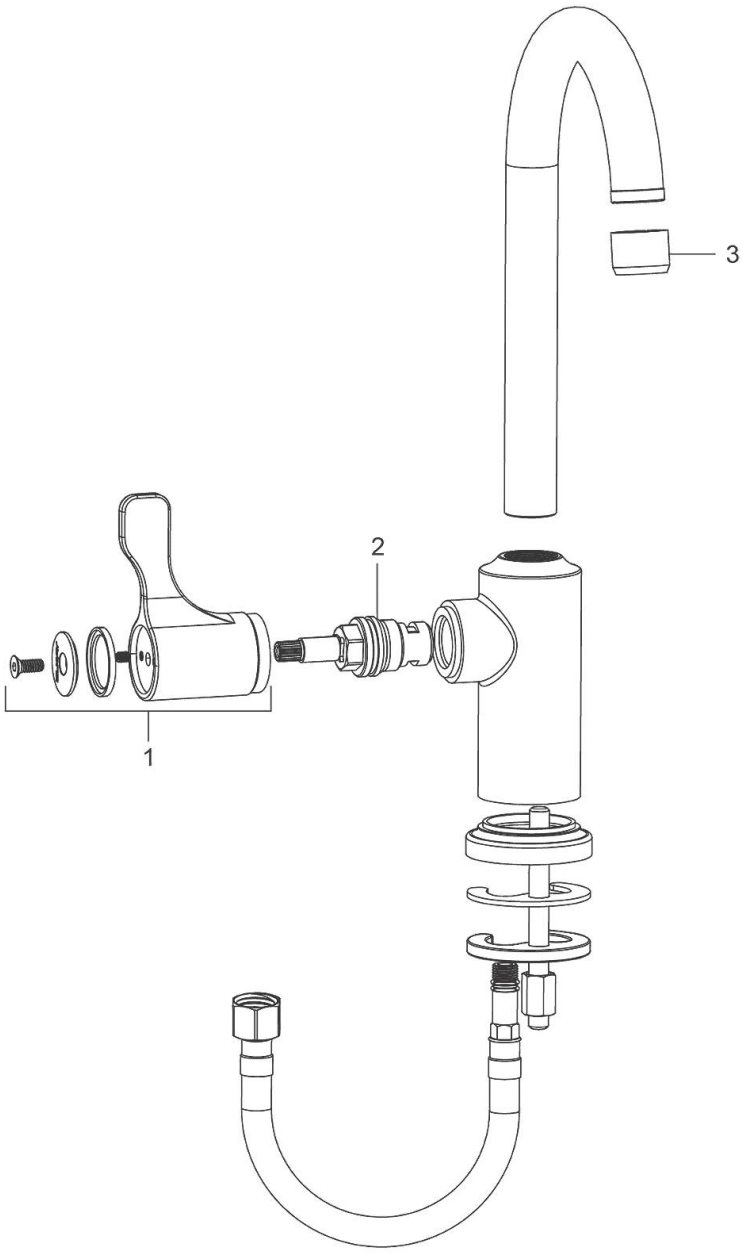

In keeping with our policy of continuing product improvement, Elkay reserves the right to change product specifications without notice. Please visit elkay.com for the most current version of Elkay product specification sheets. This specification describes an Elkay product with design, quality, and functional benefits to the user. When making a comparison of other producers’ offerings, be certain these features are not overlooked.