Manual Sink Faucets
897-244XKCABRCF

CHICAGO FAUCETS
Geberit Group

Product Type

Wall-mounted manual faucet with 8" centers

Features & Specifications

- Handles include color-coded index
- Integral supply stops
- 8" body, adjustable arms 7-5/8" - 8-3/8" centers
- Vandal Proof 2-3/8" lever handle
- Klo-Self™ self-closing cartridge, cam and cap design
- Ceramic 1/4-turn operating cartridge with integrated check valve, right-hand
- Arm, 3/16 Offset
- Vacuum breaker assembly
- ECAST® design provides durable cast brass construction with total lead content equal to or less than 0.25% by weighted average

Performance Specification

- Rated Operating Pressure: 20-125 PSI
- Rated Operating Temperature: 40-140°F (Note: 180°F max. during temporary high-temperature system flush)

Warranty

- 5-Year Limited Cartridge Warranty
- Lifetime Limited Faucet Warranty
- 1-Year Limited Finish Warranty

Codes & Standards

- ASME A112.18.1/CSA B125.1
- ADA ANSI/ICC A117.1

Job Name _____

Item Number _____

Section/Tag _____

Model Specified _____

Architect _____

Engineer _____

Contractor _____

[ ] Submitted as Shown [ ] Submitted with Variations

Date _____



ECAST

ECAST products are intended for installation where state laws and local codes mandate lead content levels or in any location where lead content is a concern.

2100 South Clearwater Drive
Des Plaines, IL
P: 847/803-5000
F: 847/803-5454
Technical: 800/TEC-TRUE
www.chicagofaucets.com

897-244XKCABRCF

Architect/Engineer Specification

Chicago Faucets No. 897-244XKCABRCF, Sink Faucet for hot and cold water, wall-mounted with 7-5/8" - 8-3/8" adjustable centers. Body and spout made of durable cast brass with rough chrome finish. Vacuum breaker spout with pail hook and wall brace. 2-3/8" metal, vandal-proof, lever handles with sixteen-point, tapered broach and secured blue and red index buttons. Klo-Self self-closing operating cartridge on the left (hot water) side; ceramic disc operating cartridge with integrated check valve on the right (cold water) side. Adjustable supply arms include 1/2" NPT female union nut. 3/4" male hose thread outlet. Round wall escutcheons. Integral stop valves for servicing the faucet. NOTE: Atmospheric vacuum breaker is NOT intended for continuous pressure applications. This product meets ADA ANSI/ICC A117.1 requirements and is tested and certified to industry standards: ASME A112.18.1/CSA B125.1.

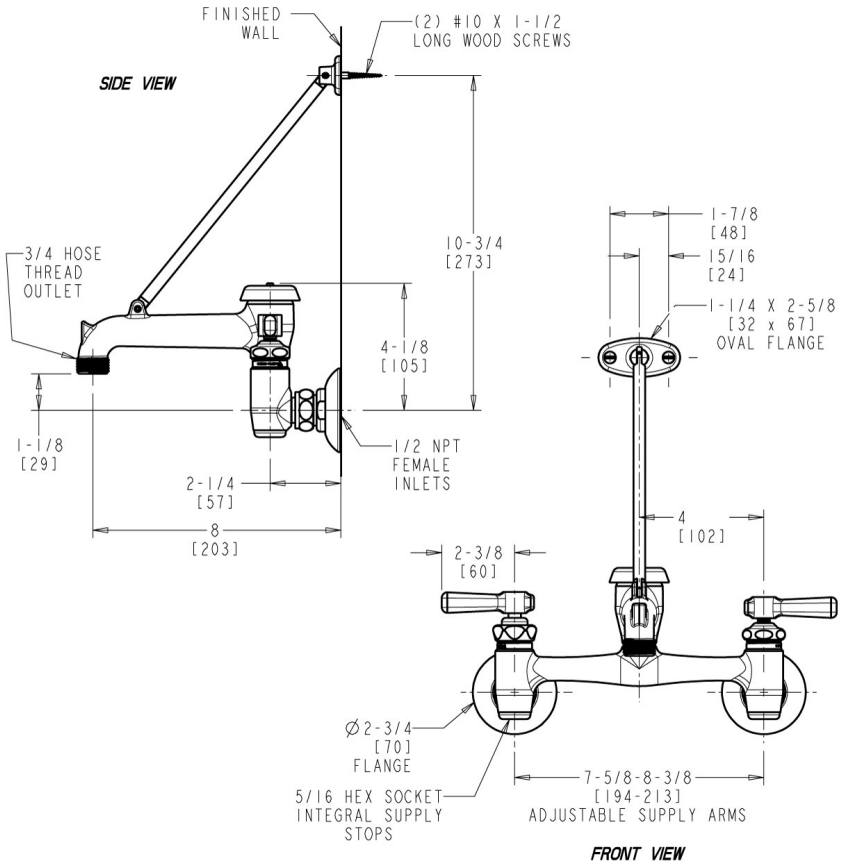

Operation and Maintenance

Installation should be in accordance with local plumbing codes. Flush all pipes thoroughly before installation. After installation, remove spout outlet or flow control and flush faucet thoroughly to clear any debris. Care should be taken when cleaning the product. Do not use abrasive cleaners, chemicals or solvents as they can result in surface damage. Use mild soap and warm water for cleaning and protecting the life of Chicago Faucet products. For specific operation and maintenance refer to the installation instructions and repair parts documents that are located at www.chicagofaucets.com.

Chicago Faucets, member of the Geberit Group, is the leading brand of commercial faucets and fittings in the United States, offering a complete range of products for schools, laboratories, hospitals, office buildings, food service, airports and sport facilities. Call 1.800.TECTRUE or 1.847.803.5000 Option 1 for installation or other technical assistance.

2100 South Clearwater Drive
Des Plaines, IL
P: 847/803-5000
F: 847/803-5454
Technical: 800/TEC-TRUE
www.chicagofaucets.com