KOHLER®

Simplice®

Pivoting toilet paper holder

K-27397

Features

- Pivoting holder makes changing toilet paper quick and simple
- Coordinates with other products in the Simplice collection

Material

- Premium metal construction for durability and reliability
- KOHLER® finishes resist corrosion and tarnishing

Recommended Products/Accessories

K-23729 Stainless steel cleaner



Codes/Standards

None Applicable

KOHLER® One-Year Limited Warranty

See website for detailed warranty information.

Available Colors/Finishes

Color tiles intended for reference only.

Color	Code	Description
	CP	Polished Chrome
	BN	Vibrant® Brushed Nickel
	BL	Matte Black

KOHLER®

Simplice®

Pivoting toilet paper holder

K-27397

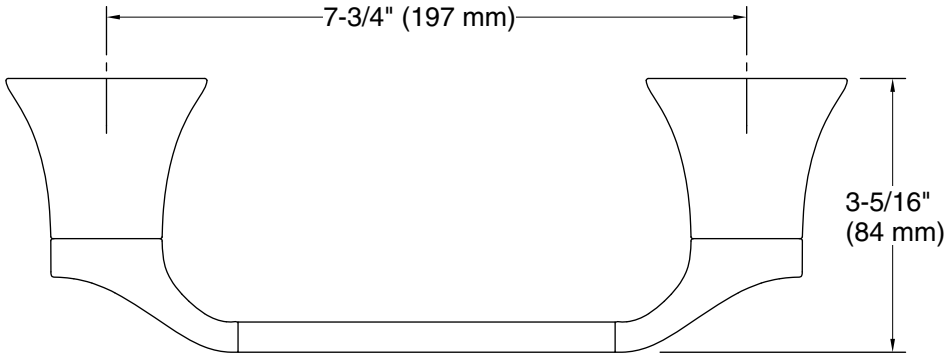

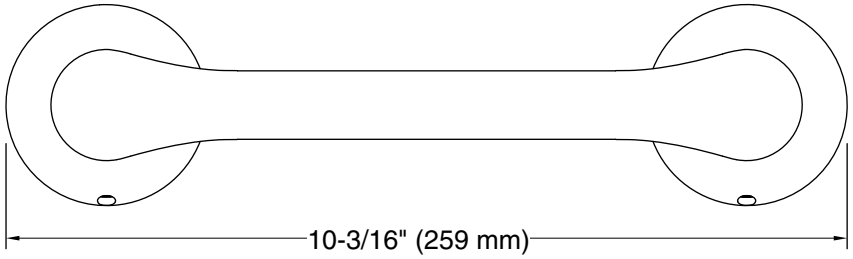

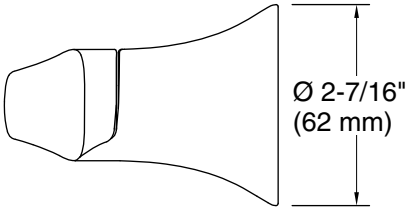

Technical Information

All product dimensions are nominal.

Material:	Zinc

Notes

Install this product according to the installation instructions.