MEM Wall valve clockwise closing 1/2" - Champagne (22kt Gold)

MEM

36 607 782



- rosette 60 x 60 mm
- head part with cut-to-length spindle and sleeve

Champagne (22kt Gold)	36 607 782-47
Chrome	36 607 782-00
Brushed Platinum	36 607 782-06
Platinum	36 607 782-08
Dark Chrome	36 607 782-19
Brushed Durabrass (23kt Gold)	36 607 782-28
Brushed Champagne (22kt Gold)	36 607 782-46
Brushed Chrome	36 607 782-93
Brushed Dark Platinum	36 607 782-99

Required miscellaneous



Wall valve 1/2" - 35 607 970 90
- max. recess depth 150 mm
- min. recess depth 105 mm

MEM Wall valve clockwise closing 1/2" - Champagne (22kt Gold)

MEM

36 607 782

mm [inches]



Certificates

DVGW_DW-6501DN0116.

WRAS_2011026.

LGA_29931.

WRAS_2010066.

DVGW_DW-6512DN0706.

MEM Wall valve clockwise closing 1/2" - Champagne (22kt Gold)

36 607 782

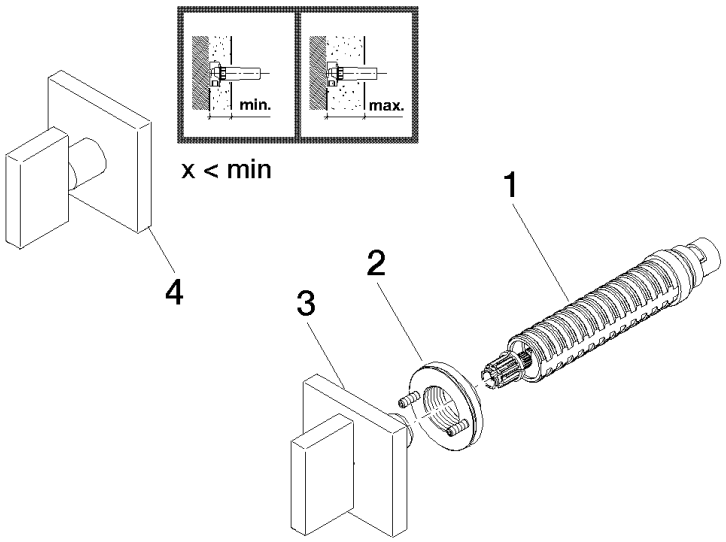

Spare parts list

No.	Item Number	Name	Quantity used	Delivery time
1	90 90 03 143 00 90	top	1	2
2	90 21 02 108 00 90	disc	1	2
3	90 20 78 002 02-47	handle	1	30
4	90 20 78 002 01-47	handle	1	-

Spare part can no longer be ordered, please order the replacement item

We reserve the right to change designs, product range and technical specifications without prior notice.
More information can be found at: www.dornbracht.com +49 (0) 2371 8899 900 mail@dornbracht.com