Shower - MEM

MEM Wall valve clockwise closing 1/2" - Champagne (22kt Gold)

Article number: 36 607 782-47

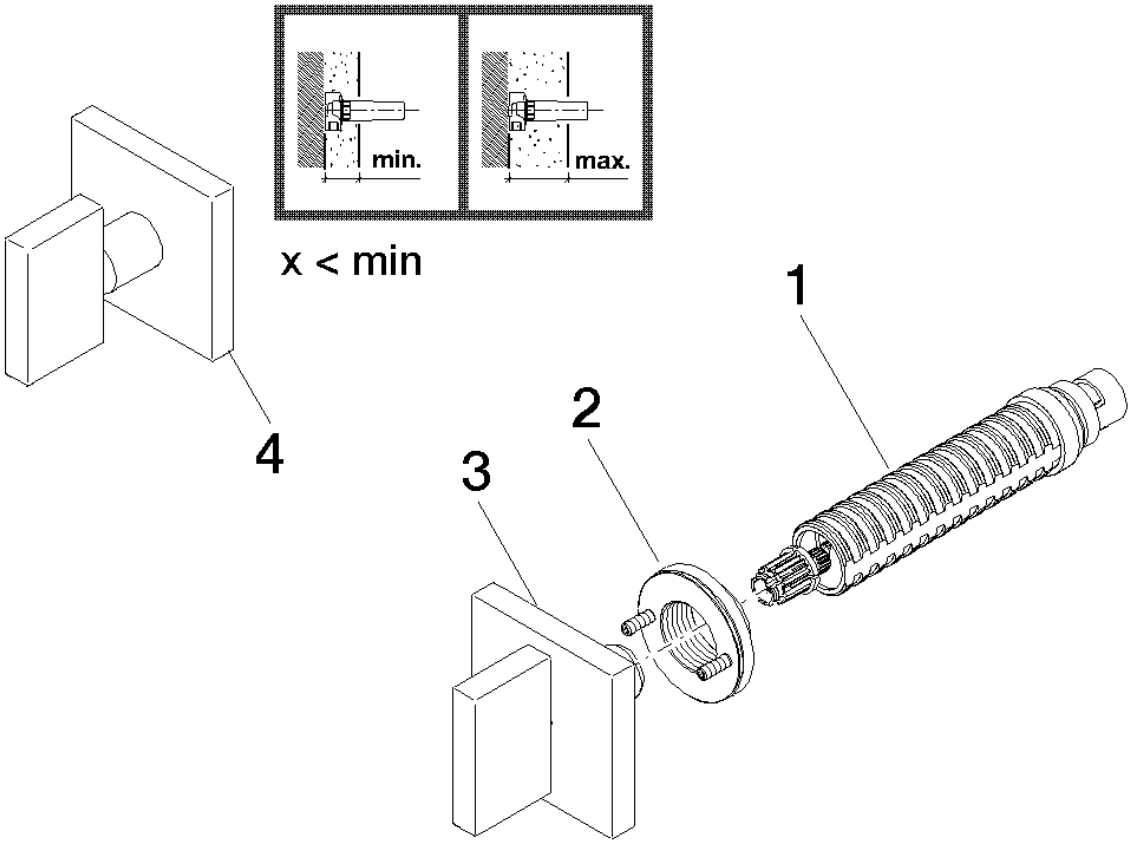

DORN BRACHT

Shower - MEM

MEM Wall valve clockwise closing 1/2" - Champagne (22kt Gold)

Article number: 36 607 782-47

Spare parts list

Position	Quantity used	Item Number	Spare part	Delivery time (Working days)
1	1	90 90 03 143 00 90	top	2
2	1	90 21 02 108 00 90	disc	2
3	1	90 20 78 002 02-47	handle	30
4	1	90 20 78 002 01-47	handle	-

Spare part can no longer be ordered, please order the replacement item