Lustra™

Quick-Release™ elongated toilet seat

K-4652

Features

- Quick-Release™ functionality allows seat to be removed easily from toilet for convenient cleaning
- Quick-Attach® hardware for fast and secure installation
- Color-matched plastic hinges

Material

- Plastic construction

Codes/Standards

None Applicable

KOHLER® One-Year Limited Warranty

See website for detailed warranty information.

Available Colors/Finishes

Color tiles intended for reference only.

Color	Code	Description
	0	White
	47	Almond
	55	Innocent Blush™
	Y2	Sunlight
	NG	Tea Green
	6	Skylight
	45	Wild Rose™
	58	Thunder™ Grey
	52	Navy
	53	Raspberry Puree
	56	Tender Grey
	71	Seafoam Green
	89	Desert Bloom
	97	Timberline™

Lustra™

Quick-Release™ elongated toilet seat

K-4652

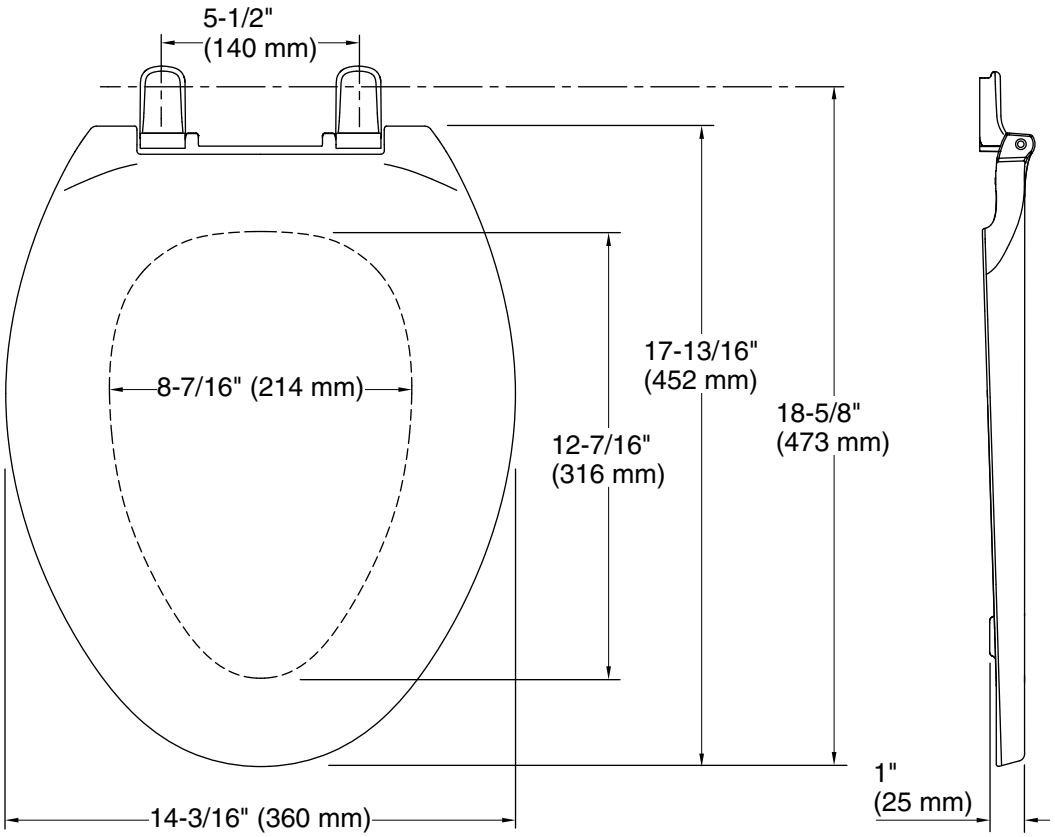

Technical Information

All product dimensions are nominal.

Seat shape type:	Elongated
Seat front type:	Closed-front
Seat-mounting holes:	5-1/2" (140 mm)

Notes

Install this product according to the installation guide.