Massage Shower - Brushed Platinum

ST 050 609 7985



- max. flow 24 l/min at 3 bar flow pressure
- rain flow
- with anti-scale system
- suitable for xGRID (when using installation track + 12 mm recess depth)
- exposed trim parts
- concealed rough parts
- temperature setting via thermostat

Brushed Platinum	ST 050 609 7985-06 0010
Chrome	ST 050 609 7985-00 0010

Individual components of this set

You need the following components for this set



4x 35 206 970 90



2x 12 370 970 90



1x 12 382 970 90



1x 36 501 985-06



1x 35 511 970 90

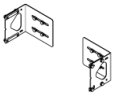

1x 12 381 970 90



4x 36 517 979-06



1x 36 607 985-06

Massage Shower - Brushed Platinum

ST 050 609 7985

Massage Shower - Brushed Platinum

ST 050 609 7985

- female thread 1/2" connection
- dust cover
- anti-water packing



Recommended miscellaneous



Leak protection 1/2" - 12 010 970 90

Recommended miscellaneous



xGRID Attachment set for integrating in the dry wall construction - 12 340 970 90

Required miscellaneous



xGRID Installation track 555 mm - 12 360 970 90

Massage Shower - Brushed Platinum

ST 050 609 7985

mm [inches]

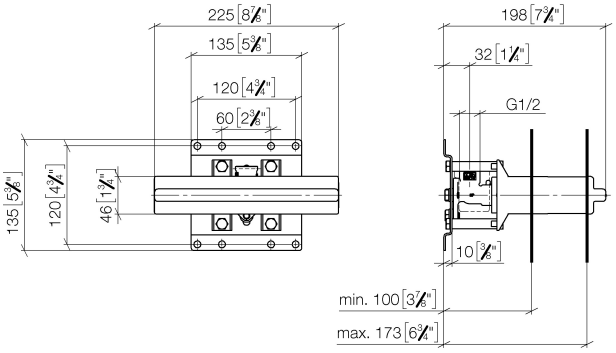

Certificates

WRAS_2106011. LGA_19489.

Massage Shower - Brushed Platinum

ST 050 609 7985

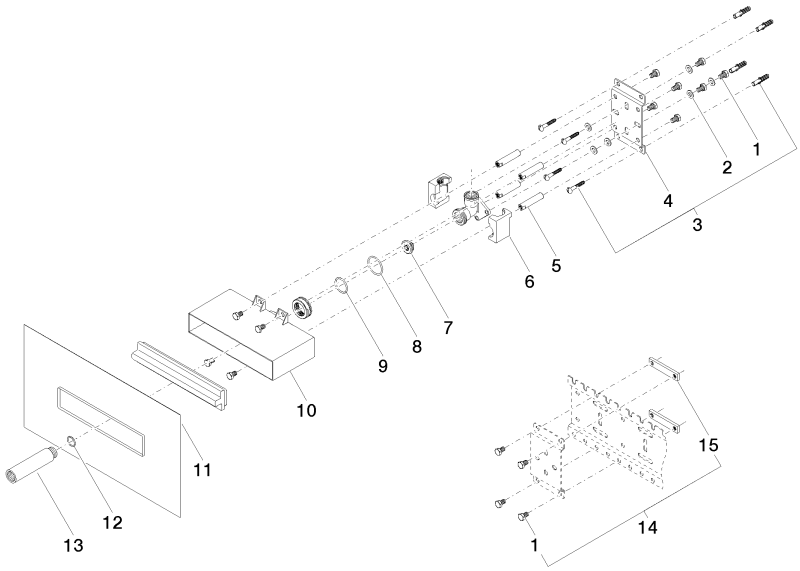

Spare parts list

No.	Item Number	Name	Quantity used	Delivery time
1	09 30 30 152 90	screw	15	2
2	09 30 11 139 90	disc	6	2
3	04 30 31 024 01 90	fixing set	2	2
4	09 17 20 094 90	holder	1	2
5	09 18 40 138 90	sleeve	1	60
6	09 11 11 036 90	accessories	1	2
7	04 31 20 006 00 90	plug	1	2
8	09 14 10 149 90	seal	1	2
9	09 14 10 118 90	seal	1	2
10	09 11 11 053 90	accessories	1	60
11	04 14 03 126 00 90	gasket kit	1	2
12	90 14 10 010 00 90	seal	1	2
13	09 24 03 169 10 90	adaptor	1	2
14	04 17 20 100 00 90	fixing set	1	2
15	09 17 20 100 90	holder	2	2

Massage Shower - Brushed Platinum

ST 050 609 7985



- red brass, lead-free
- 2x back flow preventer
- 2x female thread 3/4" connections
- 1x female thread 3/4" outlet for additional valves
- 1x female thread 3/4" outlet, right/left alternatively
- 2x dust cover
- 2x anti-water packing
- soundproofing
- gauge 120 mm
- suitable for xGRID (when using installation track + 12 mm recess depth)

Recommended miscellaneous



Extension 28 mm - 12 177 970 90

Recommended miscellaneous



Extension 46 mm - 12 178 970 90

Recommended miscellaneous



Leak protection 3/4" - 12 012 970 90

- This article is needed 2x.

Recommended miscellaneous



xGRID Attachment set for integrating in the dry wall construction - 12 340 970 90

Required miscellaneous



xGRID Installation track 555 mm - 12 360 970 90

Massage Shower - Brushed Platinum

ST 050 609 7985

Massage Shower - Brushed Platinum

ST 050 609 7985

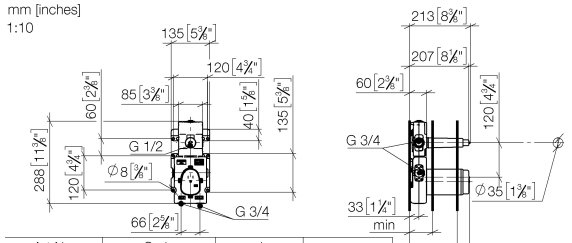

Art Nr.	Serie	min	max
36xxx361-FF	Madison	85 [3 3/8"]	110 [4 3/8"]
36xxx371-FF	Madison	85 [3 3/8"]	110 [4 3/8"]
36xxx710-FF	LULU	85 [3 3/8"]	110 [4 3/8"]
36xxx809-FF	VAIA	85 [3 3/8"]	110 [4 3/8"]
36xxx819-FF	VAIA	85 [3 3/8"]	110 [4 3/8"]
36xxx882-FF	Tara	95 [3 3/4"]	160 [6 1/4"]
36xxx892-FF	Tara	95 [3 3/4"]	160 [6 1/4"]
36xxx811-FF	CYO	95 [3 3/4"]	160 [6 1/4"]
36xxx812-FF	CYO	95 [3 3/4"]	160 [6 1/4"]
36xxx740-FF	Meta/CL.1/ CYO	95 [3 3/4"]	160 [6 1/4"]
36xxx980-FF	Symetrics	95 [3 3/4"]	160 [6 1/4"]
36xxx985-FF	Symetrics	95 [3 3/4"]	160 [6 1/4"]
36xxx705-FF	CL.1	115 [4 1/2"]	155 [6 1/8"]
36xxx715-FF	CL.1	115 [4 1/2"]	155 [6 1/8"]
36xxx782-FF	MEM	115 [4 1/2"]	155 [6 1/8"]

Certificates

Belgaqua_21-031-27_6.

WRAS_2011026.

ACS_21 ACC LY 141.

DVGW_DW-6512DN0706.

Massage Shower - Brushed Platinum

ST 050 609 7985

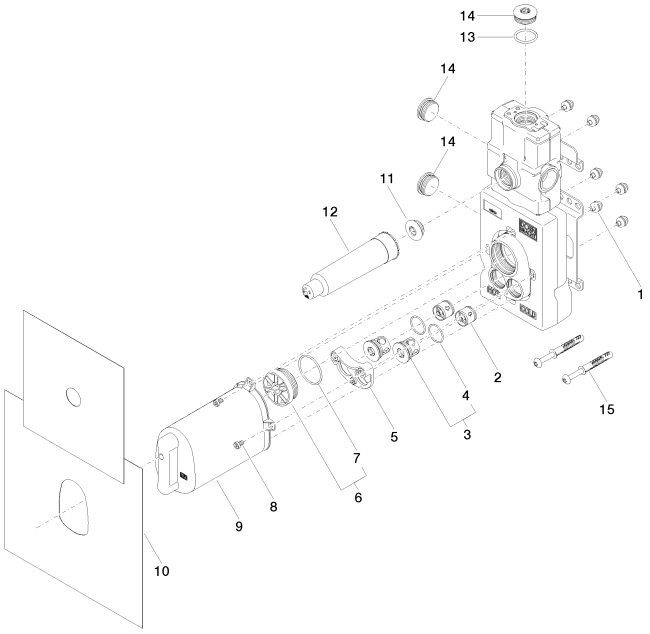

Spare parts list

No.	Item Number	Name	Quantity used	Delivery time
1	90 23 01 091 00 90	set	6	2
2	90 23 01 045 00 90	back-flow preventer	2	2
3	04 21 34 077 00 90	nipple	2	2
4	09 14 10 098 90	seal	2	2
5	90 12 12 218 00 90	base	1	2
6	04 31 20 100 00 90	plug	1	2
7	09 14 10 111 90	seal	1	2
8	09 30 30 112 90	screw	4	2
9	04 21 02 174 01 90	cap	1	2
10	04 14 03 073 05 90	gasket kit	1	2
11	04 31 20 006 00 90	plug	1	2
12	09 21 02 173 90	cap	1	2
13	09 14 10 009 90	seal	1	2
14	09 31 20 003 90	plug	3	2
15	04 30 31 054 00 90	fixing set	2	2

Massage Shower - Brushed Platinum

ST 050 609 7985

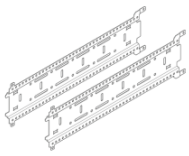

- width 555mm
- height 135 mm
- depth 12 mm
- retaining screws and plugs

This set contains 2 xGrid installation tracks and includes fixing material

More about the xGRID installation track can be found in the Shower Book brochure

Massage Shower - Brushed Platinum

ST 050 609 7985

Massage Shower - Brushed Platinum

ST 050 609 7985

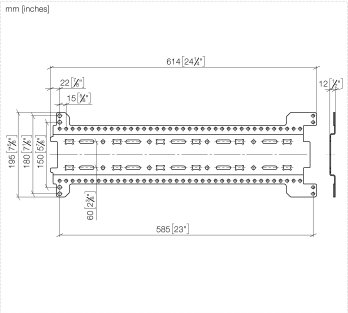

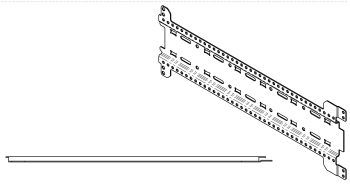

Massage Shower - Brushed Platinum

ST 050 609 7985

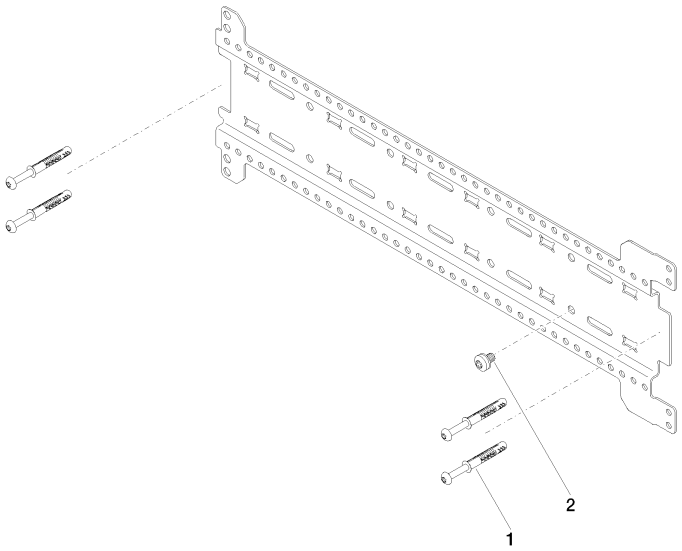

Spare parts list

No.	Item Number	Name	Quantity used	Delivery time
1	04 30 31 054 00 90	fixing set	4	2
2	04 30 30 212 00 90	fixing set	2	60

Massage Shower - Brushed Platinum

ST 050 609 7985

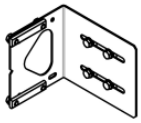



- attachment set

Massage Shower - Brushed Platinum

ST 050 609 7985

Massage Shower - Brushed Platinum

ST 050 609 7985

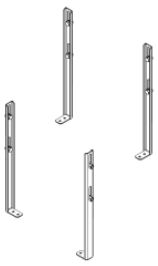

- attachment set

Massage Shower - Brushed Platinum

ST 050 609 7985

Massage Shower - Brushed Platinum

ST 050 609 7985



- HORIZONTAL RAIN, max. flow rate 6 l/min (at 3 bar)
- with anti-scale system
- cover plate 240 x 60 mm
- 1/2" connection
- This product can help a building to meet requirements of Green Building Rating Systems, e.g. LEED®, BREEAM®, DGNB

Fits: IMO, LULU, MADISON, MEM, TARA, CL.1, LISSÉ, VAIA, META, CYO

Brushed Platinum	36 517 979-06
Chrome	36 517 979-00
Platinum	36 517 979-08
Dark Chrome	36 517 979-19
Brushed Durabrass (23kt Gold)	36 517 979-28
Matte Black	36 517 979-33
Brushed Champagne (22kt Gold)	36 517 979-46
Champagne (22kt Gold)	36 517 979-47
Brushed Chrome	36 517 979-93
Brushed Dark Platinum	36 517 979-99

Required miscellaneous



Concealed wall installation box - 35 206 970 90
- max. recess depth 173 mm
- min. recess depth 100 mm

Recommended miscellaneous



xGRID Attachment set for integrating in the dry wall construction - 12 340 970 90

Required miscellaneous



xGRID Installation track 555 mm - 12 360 970 90

Massage Shower - Brushed Platinum

ST 050 609 7985

Massage Shower - Brushed Platinum

ST 050 609 7985

mm [inches]

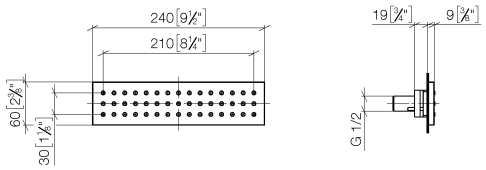

Flow rate chart

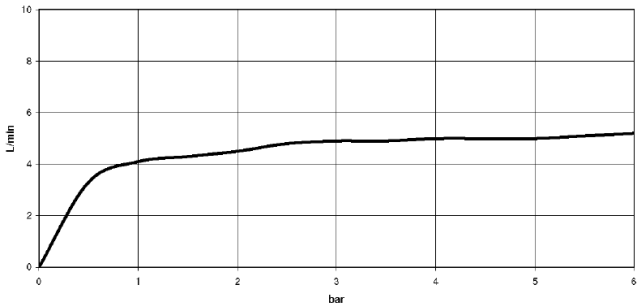

Certificates

WRAS_1304001. LGA_19489.

Massage Shower - Brushed Platinum

ST 050 609 7985

Trajectory diagram

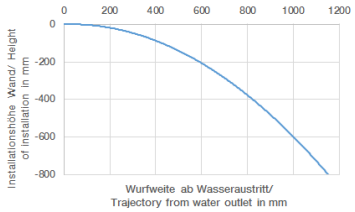

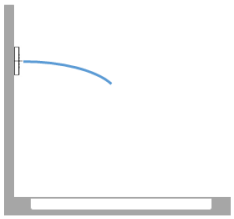

Massage Shower - Brushed Platinum

ST 050 609 7985

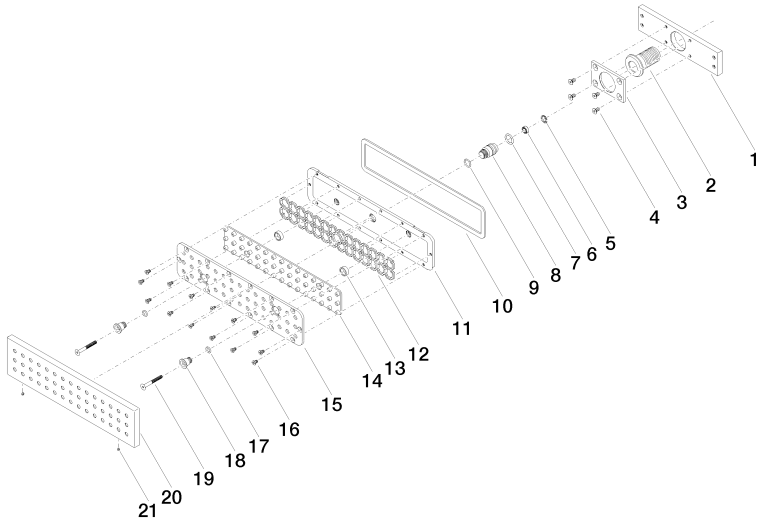

Spare parts list

No.	Item Number	Name	Quantity used	Delivery time
1	09 11 02 137 90	holder	1	2
2	09 24 04 247 20 90	connection	1	2
3	09 11 02 138 90	plate	1	2
4	09 30 30 116 90	screw	4	2
5	09 16 01 016 90	ring	1	2
6	90 23 01 032 00 90	flow reducer	1	2
7	09 14 10 003 90	seal	1	2
8	09 24 04 248 90	nipple	1	2
9	09 14 10 042 90	seal	1	2
10	09 14 03 133 90	seal	1	2
12	09 17 97 058 90	holder	1	2
13	09 28 10 142 20 90	ring	2	2
14	09 12 01 076 90	insert	1	2
15	09 11 02 136-00	cover	1	60
16	09 30 30 163 90	screw	14	2
17	09 14 10 132 90	seal	2	2
19	09 30 30 164 90	screw	2	2
20	09 27 99 001-06	rosette	1	10
21	09 31 11 006 90	pin	2	2

Massage Shower - Brushed Platinum

ST 050 609 7985



Fits: IMO, MEM, CL.1, CYO

- cover plate 120 x 120 mm
- temperature control handle with safety limit stop at 38°C
- thermostat cartridge

Brushed Platinum	36 501 985-06
Chrome	36 501 985-00
Platinum	36 501 985-08
Dark Chrome	36 501 985-19
Brushed Durabrass (23kt Gold)	36 501 985-28
Matte Black	36 501 985-33
Brushed Champagne (22kt Gold)	36 501 985-46
Champagne (22kt Gold)	36 501 985-47
Brushed Chrome	36 501 985-93
Brushed Dark Platinum	36 501 985-99

Required miscellaneous



xTOOL Concealed thermostat module without volume control - 35 503 970 90
- max. recess depth 160 mm
- min. recess depth 95 mm

Recommended miscellaneous



xGRID Attachment set for integrating in the dry wall construction - 12 340 970 90

Required miscellaneous



xGRID Installation track 555 mm - 12 360 970 90

Massage Shower - Brushed Platinum

ST 050 609 7985

Massage Shower - Brushed Platinum

ST 050 609 7985

mm [inches]

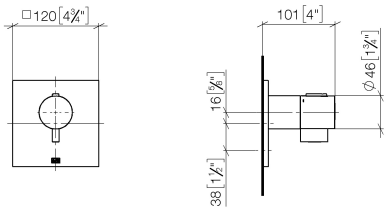

Certificates

WRAS_2011026. DVGW_DW-6512DN0706. LGA_29930. LGA_29932.

DORN BRACHT

Massage Shower - Brushed Platinum

ST 050 609 7985

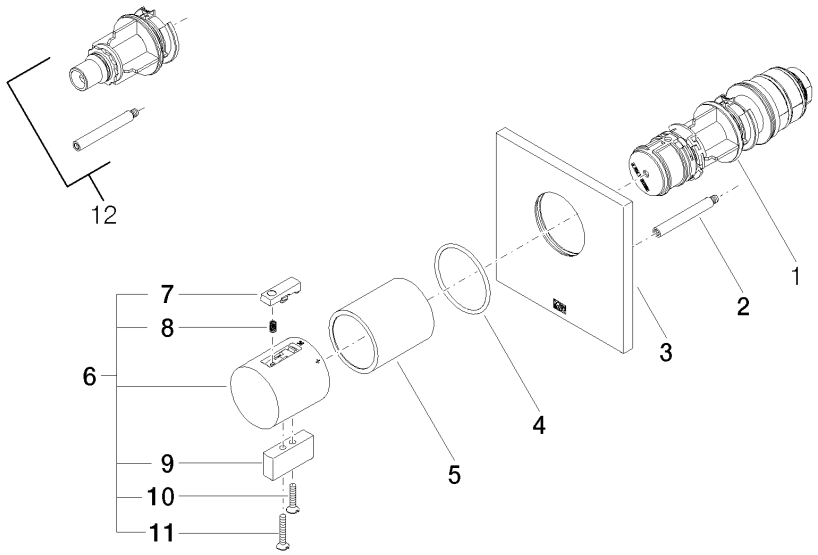

Spare parts list

No.	Item Number	Name	Quantity used	Delivery time
1	90 15 02 063 00 90	cartridge	1	2
2	90 31 09 095 00 90	bar	1	2
3	09 11 02 196-06	cover	1	60
4	90 14 10 049 00 90	seal	1	2
5	90 21 02 112 00-06	sleeve	1	10
6	04 17 33 006 00-06	handle	1	60
7	90 21 33 011 00-13	handle	1	-
	Spare part can no longer be ordered, please order the replacement item			
8	90 16 02 027 00 90	spring	1	2
9	09 20 33 006-06	handle	1	10
10	09 30 30 159-06	screw	1	10
11	09 30 30 160-06	screw	1	10
12	12 178 970 90	Extension 46 mm -	1	2

Massage Shower - Brushed Platinum

ST 050 609 7985



- rosette 60 x 60 mm
- head part with cut-to-length spindle and sleeve

Brushed Platinum	36 607 985-06
Chrome	36 607 985-00
Platinum	36 607 985-08
Brushed Durabrass (23kt Gold)	36 607 985-28
Brushed Chrome	36 607 985-93
Brushed Dark Platinum	36 607 985-99

Required miscellaneous



Wall valve 1/2" - 35 607 970 90
- max. recess depth 145 mm
- min. recess depth 75 mm

Massage Shower - Brushed Platinum

ST 050 609 7985

Massage Shower - Brushed Platinum

ST 050 609 7985

mm [inches]

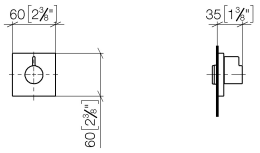

Certificates

DVGW_DW-6501DN0116.	WRAS_2011026.	IAPMO_4976 (1).	LGA_29931.	WRAS_2010066.
DVGW_DW-6512DN0706.	LGA_29932.			

Massage Shower - Brushed Platinum

ST 050 609 7985

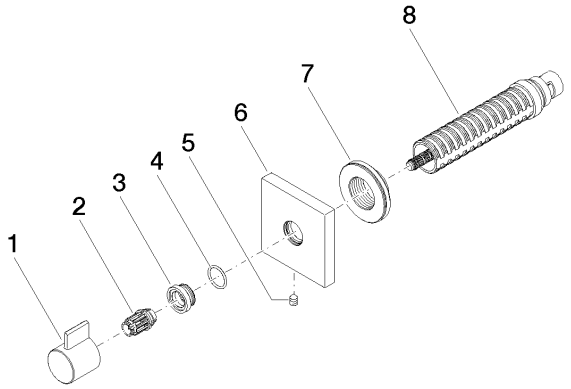

Spare parts list

No.	Item Number	Name	Quantity used	Delivery time
1	09 20 98 002-06	handle	1	10
2	09 12 12 005 90	fixing cap	1	2
3	09 12 12 043-06	base	1	10
4	09 14 10 017 90	seal	1	2
5	90 31 11 004 00 90	pin	1	2
6	09 27 98 014-06	rosette	1	10
7	09 21 02 151 90	sleeve	1	2
8	90 90 03 202 00 90	top	1	2