VAIA Wall-mounted basin mixer without pop-up waste - Brushed Champagne (22kt Gold)

VAIA

36 712 809



- 190mm projection
- fixed spout
- circular, air-enriched flow
- hole diameter valve 37 mm
- hole diameter spout 40 mm
- rosettes Ø 60 mm
- max. flow 5.7 l/min
- lead-free
- This product can help a building to meet requirements of Green Building Rating Systems, e.g. LEED®, BREEAM®, DGNB

Brushed Champagne (22kt Gold)	36 712 809-46
Chrome	36 712 809-00
Brushed Platinum	36 712 809-06
Platinum	36 712 809-08
Dark Chrome	36 712 809-19
Brushed Durabrass (23kt Gold)	36 712 809-28
Champagne (22kt Gold)	36 712 809-47
Brushed Dark Platinum	36 712 809-99

Required miscellaneous



Concealed wall-mounted mixer centred spout - 35 700 970 90
- max. recess depth 145 mm
- min. recess depth 85 mm

Required miscellaneous



Concealed wall-mounted mixer variable positioning - 35 720 970 90
- min. recess depth 85 mm
- max. recess depth 145 mm

VAIA Wall-mounted basin mixer without pop-up waste - Brushed Champagne (22kt Gold)

VAIA

36 712 809
mm [inches]

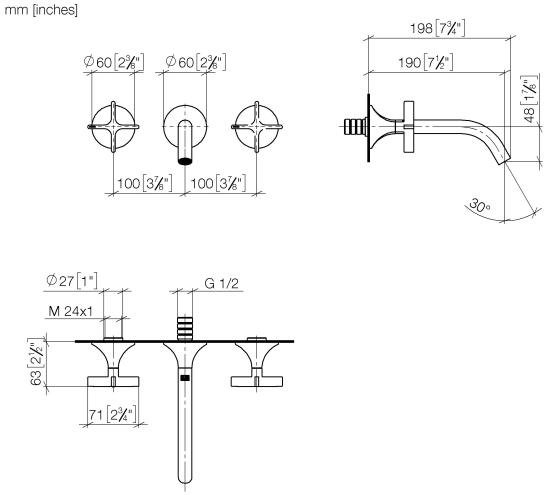

Flow rate chart

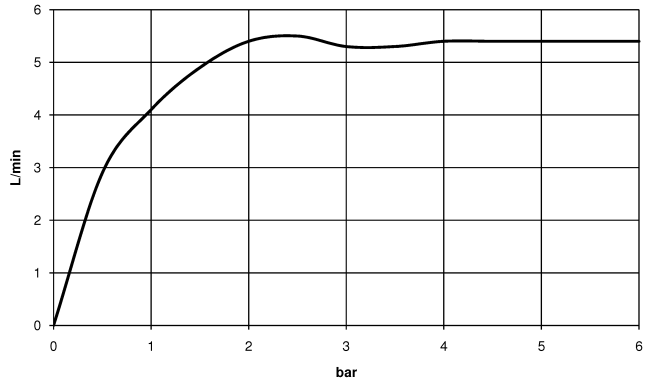

Trajectory diagram

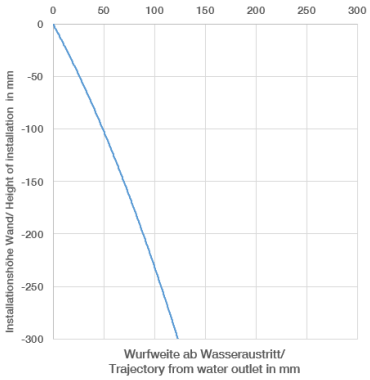

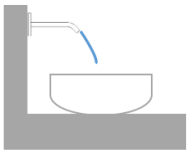

Certificates

LGA_29297. WRAS_2312073.

VAIA Wall-mounted basin mixer without pop-up waste - Brushed Champagne (22kt Gold)

36 712 809

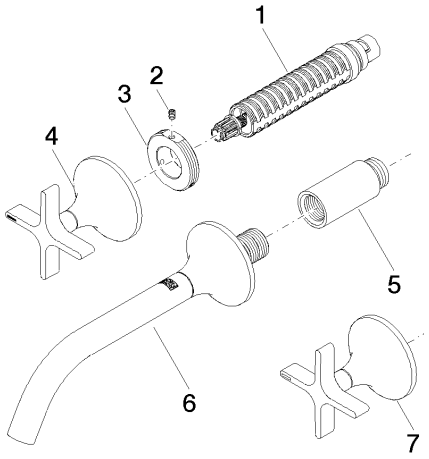

Spare parts list

No.	Item Number	Name	Quantity used	Delivery time
1	90 90 03 157 00 90	top	2	2
2	09 31 11 008 90	pin	2	2
3	09 21 02 163 90	disc	2	2
4	90 20 80 011 00-46	handle (hot)	1	30
5	09 24 03 081 10 90	extension	1	2
6	13 800 809-46	VAIA Wall-mounted basin spout without pop-up waste - Brushed Champagne (22kt Gold)	1	30
7	90 20 80 010 00-46	handle (cold)	1	30

We reserve the right to change designs, product range and technical specifications without prior notice.
More information can be found at: www.dornbracht.com +49 (0) 2371 8899 900 mail@dornbracht.com