Washbasin - VAIA

VAIA Wall-mounted basin mixer without pop-up waste - Brushed Champagne (22kt Gold)

Article number: 36 712 809-46

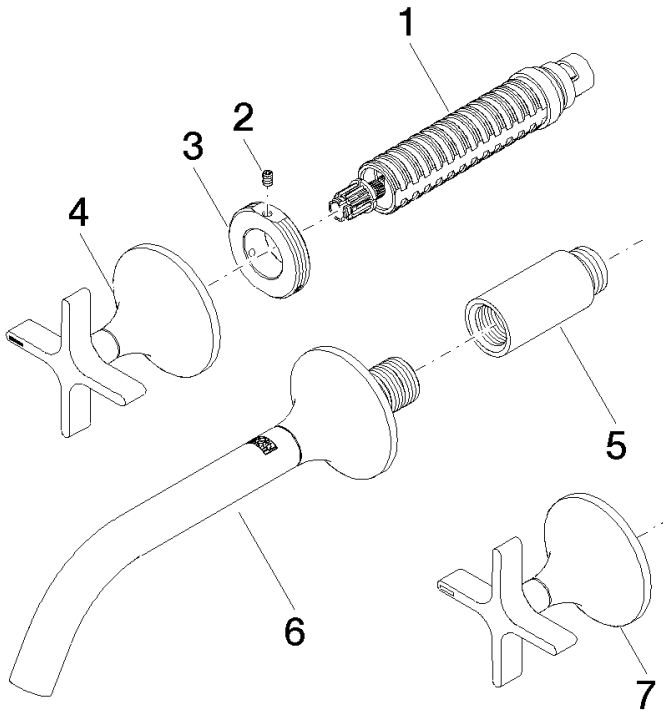

DORN BRACHT

Washbasin - VAIA

VAIA Wall-mounted basin mixer without pop-up waste - Brushed Champagne (22kt Gold)

Article number: 36 712 809-46

Spare parts list

Position	Quantity used	Item Number	Spare part	Delivery time (Working days)
1	2	90 90 03 157 00 90	top	2
2	2	09 31 11 008 90	pin	2
3	2	09 21 02 163 90	disc	2
4	1	90 20 80 011 00-46	handle (hot)	30
5	1	09 24 03 081 10 90	extension	2
6	1	13 800 809-46	VAIA Wall-mounted basin spout without pop-up waste - Brushed Champagne (22kt Gold)	30
7	1	90 20 80 010 00-46	handle (cold)	30