GSA prices effective January 30, 2023
(based on October 3, 2022, commercial price list)
Published June 2024

Workspaces

OE1 Workspace Collection™

General Services Administration
Federal Supply Service
Authorized Federal Supply Schedule Price List

Online access to contract ordering information, terms and conditions, up-to-date pricing, and the option to create an electronic delivery order is available through GSA Advantage!®, a menu-driven database system.
The Internet address for GSA Advantage! is www.gsaadvantage.gov.

Office Furniture
FSC/PSC 7110/7125
Contract Number: GS-03F-036DA
UEI: Q2K3MSZ843D8
Contract Period: December 21, 2015—December 20, 2025

MillerKnoll, Inc.
855 East Main Avenue
Zeeland, Michigan 49464
(616) 654 3000 Phone
(616) 654 8278 Fax
www.HermanMiller.com/government

Business Size: Large

Contract Information

1a. Special Item Numbers (SIN)

SIN 33721

Furniture Systems, Computer Furniture, Filing and Storage, Tables and Accessories, Upholstered Seating and Multi-Purpose Seating, Project Management, Reconfiguration and Relocation Services, Design/Layout and Installation Services

SIN 33721P

Packaged Offices

SIN 337127

Modular Laboratory Furniture Systems

SIN 339113H

Healthcare Furniture

SIN OLM

Order-Level Materials (OLMs)

This SIN is only for products and/or services used in direct support of the purchase of new furniture. It requires approval from the ordering Contract Officer. Please contact your local MillerKnoll Inc. representative to discuss the appropriate use of this SIN.

SIN 532289

Leasing

Contact MillerKnoll Inc participating government dealer for current leasing information.

1b. Lowest Priced Model

SIN 33721:	BVP3.S	$7.27
SIN 33127:	TW113	$5.81
SIN 339113H:	CR900NR	$483.80

1c. Service Rates

Project Management

Furniture Project Manager: $64.75 per hour
Furniture Project Coordinator: $49.00 per hour
Build-Out Project Manager: $80.00 per hour

Reconfiguration and Relocation Services

Not to exceed $55 per hour.

See * Additional Notes for Installation & Reconfiguration and Relocation Services.

Design/Layout

Not to exceed $65 per hour.

Installation Services

Not to exceed $55 per hour ($82.50 per hour for after-hours Installation).

See * Additional Notes for Installation & Reconfiguration and Relocation Services.

2. Maximum Order

SIN 33721, 337127, NEW, OLM

$250,000 net product value

SIN 33721P

$250,000 net value

SIN 339113H

$500,000 net product value

3. Minimum Order

$100 net

4. Geographic Coverage

Continental U.S.

Orders for Alaska, Hawaii, and Puerto Rico will be shipped F.O.B. inland carrier point of exportation.

5. Point of Production

Zeeland, Ottawa County, Michigan

Spring Lake, Ottawa County, Michigan

Elland, Yorkshire, United Kingdom

Hildebran, Burke County, North Carolina, USA

6. Pricing

Prices shown are list. Discounts include Industrial Funding Fee.

SIN 33721

Standard Lead Time, Single Order Net Purchase $100 - 250,000, includes approved Herman Miller Options Products.

Product Line	Discount From List
Action Office 1	73.8%
Action Office 2	73.8%
Aeron	64.5%
Ambit Workspace Solutions	74.3%
Aside	64.2%
C-Style Overhead Storage	73.8%
Canvas Office Landscape Channel	74.8%
Canvas Office Landscape Dock	74.8%
Canvas Metal Desk	74.8%
Canvas Office Landscape Metal Storage	74.8%
Canvas Office Landscape Private Office	74.8%
Canvas Office Landscape Wood Storage	74.8%
Canvas Office Landscape Vista	74.8%
Canvas Office Landscape Wall	74.8%
Caper	61.5%
Commend Nurses Station	73.3%
Cosm	61.7%
Eames® Aluminum Group	58.7%
Eames Conference & Dining Tables	73.6%
Easton Family	54.91%
Embody	59.7%
Energy Distribution Systems	73.8%
Ethospace System	73.8%
Everywhere™ Tables	73.8%
Exclave	61.7%
Fuld	59.7%

Headway™ Tables	73.8%
Intent Solution	58.7%
Layout Studio®	60.7%
Lighting	73.8%
Lino	63.7%
Meridian Laterals	67.3%
Meridian Pedestals	64.2%
Meridian Towers	62.7%
Meridian Storage	62.7%
Mirra 2	61.7%
Motia Tables	73.8%
NaughtOne	50.0%
Nemschoff	54.91%
Nevi™ Tables	73.8%
Nevi Link	73.8%
OE1 Boundary	72.8%
OE1 Community Elements	61.7%
OE1 Micro Packs	73.8%
OE1 Storage	72.8%
OE1 Tables and Benching	73.8%
Overlay™	62.7%
Plex® Lounge Furniture	59.5%
Public Office Landscape	61.7%
Renew™ Tables	73.8%
Renew Link	73.8%
Sayl	62.2%
Setu	59.7%
Swoop Lounge Furniture	60.7%
Thrive Portfolio	62.0%
Thrive Portfolio-CBS Products Extension	62.0%
Tu Lateral Files	74.3%
Tu Pedestals	73.8%
Tu Storage	74.3%
Tu Towers	74.3%
Tu Wood Cases	74.3%
Tu Wood Cubbies	74.3%
Tu Wood Credenzas	74.3%
Tu Wood Pedestals	74.3%
Tu Wood Towers	74.3%
Valor™ Family	54.91%
Verus	63.7%
Zeph	60.2%

Services

Please refer to section 19 for Terms and Conditions of Installation/ Reconfiguration and Relocation Services.

Project Management

Services under this SIN may be used only in conjuction with the purchase of new furniture. Please contact your local MillerKnoll Inc. representative to discuss the available labor categories (listed below). The hourly rates listed are “Not To Exceed” or “NTE” values.

Furniture Project Manager: $64.75 per hour
Furniture Project Coordinator: $49.00 per hour
Build-Out Project Manager: $80.00 per hour

Reconfiguration and Relocation Services

Reconfiguration and Relocation Services will be provided by MillerKnoll Inc. or its participating dealer based on a fee not to exceed $55 per hour.

See * Additional Notes for Installation & Reconfiguration and Relocation Services.

Design/Layout

Design service will be provided by MillerKnoll Inc. or its participating dealer based on a fee not to exceed $65 per hour.

Installation Services

Installation Services will be provided by MillerKnoll Inc. or its participating dealer based on a fee not to exceed $55 per hour ($82.50 per hour for after-hours Installation).

See * Additional Notes for Installation & Reconfiguration and Relocation Services.

SIN 337127

Standard Lead Time, Single Order Net Purchase $100 - 250,000, includes approved Herman Miller Options Products.

Product Line	**Discount From List**
Action Lab	58.5%
Compass System	58.5%
Co/Struc System	58.5%
Healthcare Carts	18.0%
Mora System	58.5%
Bedside Cabinets	58.5%

SIN 33721P

Packaged Office Furniture - Maximum Order $250,000 (net).

Includes packaged furniture solutions for customers needing to furnish an office.

SIN 339113H

Standard Lead Time, Single Order Net Purchase $100 - 500,000, includes approved Herman Miller Options Products.

Product Line	**Discount From List**
Nemschoff Healthcare Furniture	54.91%

7. Quantity Discounts

Reference item #6.

8. Payment Terms

Net 30 days

9. Foreign Items

None

10. Time of Delivery

a. 90 day ARO
b. Expedited delivery: Items listed in the 10-Day section of the catalogs are available for expedited delivery.
c. Overnight/2-day delivery: Select items may be available for overnight or 2-day delivery. Contact MillerKnoll Inc. or a participating dealer for availability and rates.
d. Urgent requirements: Agencies may contact contractor or participating dealer to request faster delivery.

11. F.O.B.

F.O.B. destination except Alaska, Hawaii, and Puerto Rico, which will be shipped F.O.B. inland carrier point of exportation.

12. Ordering Address

a. MillerKnoll Inc.
Government Customer Care 0161
855 East Main Avenue
Zeeland MI 49464.

b. For supplies and services, the ordering procedures information on Blanket Purchase Agreements (BPA's) are found in Federal Acquisition Regulation (FAR) 8.405-3.

13. Payment Address.

MillerKnoll Inc.
22764 Network Place
Chicago, IL 60673-1227

14. Warranty

MillerKnoll Inc. commercial warranty applies.

15. Export Packing Charge

Prices supplied on request.

16. Rental Maintenance and Repair Terms

Not applicable

17. Terms and Conditions of Installation/Reconfiguration and Relocation Services

* Additional Notes for Installation & Reconfiguration and Relocation Services:

FOB Destination (Drop Ship): Price includes product delivery to the site, brought to the tailgate of the truck. The purchaser is responsible for unloading.

Prices effective up to the maximum order by SIN only. Above the MO, pricing shall be negotiated on a case-by-case basis between the client and local dealer.

Standard Services are Subject to the Following Conditions:

Installation will be performed during normal weekday working hours.

Adequate facilities for delivery, unloading, moving and staging/storing the product during the installation process shall be provided.

Service work will not be hindered by other trades.

Electric, heat, and adequate elevator service will be furnished without charge.

The immediate installation area shall be complete and free of debris including the carpet/flooring before installation commences.

Any work requiring a licensed electrician is the responsibility of the buyer.

Additional Charges May Apply For:

Major Metro Markets and any non-ground floor installation.

Major Metro Markets include large population centers and urban environments.

Installation in a clinical/medical environment.

Special restrictions or limits established by local laws,

ordinances or the directions of the buyer, including but not limited to restrictions on transportations of materials, street access to the job site and/or dock facilities.

Installations outside of a 50 mile radius of the servicing dealer.

Local Prevailing Wage and/or Union Labor Rates.

Any additional charges shall be quoted by the dealer and approved by the buyer prior to performance of the work.

18. Terms and Conditions of Repair Parts

Not applicable

19. Service and Distribution Points

For service and distribution points nearest you, call (800) 851 1196.

20. Participating Dealers

Access Herman Miller web site for current list of participating dealers: www.HermanMiller.com/where-to-buy/contact-a-dealer/. Select your market by using the filter.

21. Preventive Maintenance

Not applicable

22a. Special Attributes.

2022

MillerKnoll earns its 15th consecutive perfect score in Human Rights Campaign Foundation's 2022 Corporate Equality Index.

2021

The OE1 Trolley and Micro Packs are both winners of the 2021 Archiproducts international design competition in the Office Category.

MillerKnoll is named to Michigan's Best and Brightest in Wellness List for 2021.

MillerKnoll is awarded Platinum Rating in CSR by EcoVadis.

OE1 is named winner of Wallpaper's "Most Futuristic Furniture" Category as part of their first-ever Smart Space Awards.

OE1 receives the Workplace category award from Fast Company's 2021 Innovation by Design Awards.

MillerKnoll is named to Fast Company's Annual List of the World's Most Innovative Companies for 2021.

MillerKnoll is recognized as a "Disclosure Leader" by the Chemical Footprint Project (CFP).

MillerKnoll earns its 14th consecutive perfect score in Human Rights Campaign Foundation's 2021 Corporate Equality Index.

MillerKnoll is named to Newsweek's List of America's Most Responsible Companies 2021.

Great Lakes Women's Business Council awards MillerKnoll for "Excellence in Supplier Diversity" in the Best In Class category.

2020

Herman Miller is recognized with a 2020 FSC® Leadership Award for our commitment to responsible forestry management.

Herman Miller is named one of Investor's Business Daily Top 50 Best ESG (Environmental, Social, and Corporate Governance) Companies.

Working Mother names Herman Miller as one of the Best Companies for Dads.

Herman Miller is awarded Platinum Rating in CSR by EcoVadis.

Herman Miller is named Diversity Inc 2020 Noteworthy Company for recruitment efforts, employee development opportunities, leadership accountability, and supplier diversity.

Cosm, by Studio 7.5, receives an iF Gold Award in the Office and Industry category at the iF World Design Awards 2020.

Herman Miller earns its 13th consecutive perfect score in Human Rights Campaign Foundation's 2020 Corporate Equality Index.

2019

Mora System casework, designed by Collective Ten for Herman Miller, receives silver in the Industrial and Life Science Design/ Medical Furniture category at the European Product Design Awards.

Mora System casework is awarded GOOD DESIGN Award 2019, selected for design excellence and innovation.

National Minority Supplier Diversity Council (NMSDC) names Herman Miller as the 2019 Class 1 Corporation of the Year for leadership in supplier diversity.

TIME Magazine names Cosm to its list of 100 Best Inventions of 2019.

Herman Miller is named #12 Overall and #2 in Manufacturing on Investor's Business Daily Best ESG (Environmental, Social, Governance) Companies.

Herman Miller is recognized as a silver level Certified Veteran-Friendly Employer by the Michigan Veterans Affairs Agency for a commitment to veteran hiring, retention, and development.

For the second year in a row, Herman Miller receives a Gold Medal from EcoVadis in recognition of Corporate Social Responsibility achievement measured in categories of environment, labor and human rights, ethics, and sustainable procurement.

Herman Miller is named "Frontrunner" in Chemical Footprint Project by Clean Production Action for our chemical management policies and practices.

Herman Miller receives International Interior Design Association and Contract's best showroom design award in the "Large Showroom" category at NeoCon.

Herman Miller earns its 12th consecutive perfect score in Human Rights Campaign Foundation's 2019 Corporate Equality Index.

Cosm, designed by Studio 7.5 for Herman Miller, receives a Red Dot Best of the Best Product Design Award in the "Office Chairs" category.

Lino, designed by Sam Hecht and Kim Colin for Herman Miller, receives an iF Design Award in the Product Design category.

2018

Overlay, designed by Birsel+Seck, receives Interior Design Best of Year Award in the Partitions and Wall Systems category.

Herman Miller receives the "Corporation of the Year" in consumer products award from the Michigan Minority Supplier Development Council.

Herman Miller achieves the Advanced Excellence in Supplier Diversity Award from the Great Lakes Women's Business Council for doing business with women-owned suppliers.

Great Lakes Women's Business Council awards Herman Miller for "Excellence in Supplier Diversity" in the Advanced category.

WEConnect awards Herman Miller an Honorable Mention for global supplier diversity initiatives.

As one of the top-scoring companies in the industry for the 14th consecutive year, Herman Miller has qualified for inclusion in RobecoSAM's 2018 Sustainability Yearbook and receives the Silver Class distinction for excellent sustainability performance—economic, environmental, and social.

For the 11th consecutive year, Herman Miller receives a perfect score on the Human Rights Campaign Foundation's Corporate Equality Index and is designated as Best Place to Work for LGBT equality. This report evaluates U.S. companies in terms of diversity, particularly LGBT-related policies and practices.

Herman Miller receives Gold Medal from EcoVadis in recognition of Corporate Social Sustainability achievement measured in categories of environment, labor and human rights, ethics, and sustainable procurement. EcoVadis operates the first web-based collaborative platform that allows companies to assess the environmental and social performance of their global suppliers.

Aeron receives Good Design Award from The Chicago Athenaeum Museum of Architecture and Design.

The Cosm Chair wins Mix Interiors "Product of the Year—Task" award.

2017

Herman Miller receives "Rising Star Award" from the Michigan Veterans Affairs Agency (MVAA) for exhibiting new and novel approaches to veteran recruitment and hiring.

Herman Miller is named the 2017 "Corporation of the Year" in the consumer products sector by the Michigan Minority Supplier Development Council (MMSDC).

Herman Miller receives a 2017 SEAL (Sustainability, Environmental Achievement and Leadership) Business Sustainability Award. SEAL Award winners are determined by a holistic methodology measuring applicants against established benchmarks that demonstrate impact and progress toward creating a healthy planet and a sustainable future.

Herman Miller earns the 4 Star Diversity Visionary Award. This award celebrates the diversity, equality, and inclusion work of Herman Miller. The award is presented at the annual Diversity Equity Inclusion Summit, held by the Grand Rapids Area Chamber of Commerce.

Herman Miller is named one of the Best and Brightest in Wellness for the 5th year in a row.

Herman Miller earns its 10th consecutive perfect score in Human Rights Campaign Foundation's 2017 Corporate Equality Index.

As one of the top-scoring companies in the industry for the 13th consecutive year, Herman Miller has qualified for inclusion in RobecoSAM's 2017 Sustainability Yearbook and receives the Bronze Class distinction for excellent economic, environmental, and social sustainability performance. The selection criteria for inclusion in the Yearbook becomes more rigorous each year, and only the top 15 percent of companies within each industry are selected.

Herman Miller once again earns the WorldatWork Seal of Distinction, a unique standard of excellence in work-life effectiveness that shows we provide a distinct, mutually beneficial workplace experience. Herman Miller is the only furniture manufacturer among the 160 companies across the U.S. and Canada honored with the award.

Herman Miller's Mora wins Nightingale Silver Award in the "Furniture Collections" category at the 2017 Healthcare Design Conference.

2016

Herman Miller earns 9th consecutive perfect score in Human Rights Campaign Foundation's Corporate Equality Index and is designated as Best Place to Work for LGBT equality.

Herman Miller is recognized as the Business of the Year at the Annual Meeting of the West Michigan Environmental Action Council (WMEAC) for being an outstanding partner in support of the growth of WMEAC's programs. WMEAC's award goes to the business with the greatest depth and breadth of support, unwavering dedication to environmental action in West Michigan, and a strong corporate commitment to environmental advocacy.

The 101 Best and Brightest Sustainable Companies once again (5th consecutive year) recognizes Herman Miller as an organization in Michigan (and for the first time, in the nation) that exhibits leadership and innovation in its approach to sustainability. This award celebrates those companies that are making their businesses more sustainable, the lives of their employees better, and the community, both locally and globally, more responsible as a whole.

Herman Miller is recognized by the Michigan Minority Supplier Development Council (MMSDC) as a "Corporation of the Year". Additionally, we are the only West Michigan company this year to receive an "Ambassadors Championing Excellence" Award from the MMSDC.

Herman Miller is recognized with "2016 Excellence in Supplier Diversity Award" from the Great Lakes Women's Business Council.

Herman Miller is recognized as a 2016 Healthiest 100 Workplace in America, ranking 49th in the country for our commitment to health and exceptional corporate wellness programming.

Herman Miller receives the Best and Brightest in Wellness Award for the 4th year in a row. This program is an innovative initiative that recognizes and celebrates quality and excellence in health awareness.

The Michigan Occupational Safety and Health Administration renews Herman Miller's "Star" status, the highest workplace safety and health designation, for the Hickory facility in Spring Lake.

Plex Lounge Furniture from Herman Miller receives #MetropolisLikes award at NeoCon 2016.

Plex Lounge Furniture from Herman Miller receives Interior Design HiP Award for Workplace Seating/Lounge at NeoCon 2016.

Herman Miller is named a 2016 Women on Boards Winning Company. Companies selected for this recognition are considered champions of board diversity as 20 percent or more of their board seats are occupied by women.

Herman Miller is selected for inclusion in the 2016 RobecoSAM Sustainability Yearbook for the 12th consecutive year.

Herman Miller again earns the WorldatWork Work-Life 2016 Seal of Distinction. This award identifies organizations that focus on programs that promote work-life balance and overall well-being.

22b. Section 508 Compliance

Not applicable

23. Unique Entity ID: Q2K3MSZ843D8

24. Registered in System for Award Management (www.SAM.gov) Database

25. Cancellation

Prior to production, no cancellation charge will apply. After production, only actual cost incurred that the contractor can demonstrate if items are sold after 3 months.

26. Restocking Charges

Agencies must notify the contractor for authorization prior to returning any items. The customer agency will be required to pay all packaging and return freight charges. A restocking fee of 50% for Systems Furniture and 35% for all other product lines will be charged for any returned items.

Returns and restocking policy is not applicable to Options products, products under SIN 337127, 339113H, NaughtOne and Nemschoff products.

MillerKnoll Inc. Miscellaneous Information:

Federal ID Number: 38-0837640

Commercial and Government Entity Code (CAGE): 40636

Data Universal Numbering System (DUNS) 00-601-2801

Commercial Entity Code (CEC): 00702290J

Contents

Introduction	**page 2**
OE1 Workspace Collection™	**3**
OE1 Boundary	5
OE1 Height Adjustable Micro Packs	24
OE1 Communal Tables	40
OE1 Fixed Height Tables	65
OE1 Screens	109
OE1 Storage	118
OE1 Community Elements	135
OE1 Accessories	138
Indices	**141**
By Name	141
By Number	143
Appendices	
20-Day or Less/Assigned Lead-Time Order Information	
Keyed-Alike Information	
Customer's Own Material Order Information-Workspaces	
Textiles Application Chart-Workspaces	
Textiles Application Chart-Seating	
Textile Colors	

For the latest materials information, refer to the Materials pages on HermanMiller.com.

Introduction

A Note on the Organization of This Book

There are a few signals that will help you understand the organization of this book. Once you know them, you should be able to find your way around easily.

Like a newspaper, this book is formatted with columns of text and illustrations that run vertically.

Information wraps from one column to the next and continues for as many pages as it needs to.

Black bars are clues.

A black bar at the top of a page signals the start of information about a product.

This information is divided into two sections, each signaled by a black bar. Product Information includes a description, additional notes, and dimensional drawings. Specification Information, which always begins at the top of a column, includes a series of steps. Each step represents a decision you need to make in order to complete your product number. Steps must be followed sequentially. The number of pages needed to complete information on a product varies; some will be complete in one page; others may fill three or four pages. Just continue going through the steps until you run into the next product, signaled by the black bar at the top of the page.

Black tabs running along the outside edge of the page help you locate what section you are in or what section you want to go to. You can thumb forwards or backwards to find a section; tabs and text appear on both sides of the page.

The additional pages in the back of the book include the appendices and indices. They are signaled by a long black bar running along the outside edge of the page.

The index is presented two ways.

The first index is in alphabetical order by product name. It can be helpful if you are new to the products and numbering scheme or if you are looking for a type of product, such as work chair or round table.

The second index is by product number. It lists, in alphanumeric order, the base product number, typically a five-digit number.

General Information

This book is effective January 30, 2023, subject to change without notice. Products may be purchased from authorized Herman Miller dealers who will quote prices upon request. For more information about our products and services or to see a list of dealers, visit www.HermanMiller.com.

All prices are list prices. Additional services, such as planning services, design, storage, and installation, are not included and must be added to these prices when the additional services are requested.

Illustrations, specifications, and prices are based on the latest information at the time of publication. The right is reserved to make changes at any time without notice in prices, fabrics, finishes, materials, specifications, and models, and also to discontinue models and finishes.

Dimensions shown in the drawings are engineering drawing dimensions rounded up to the nearest 1/8". Product is shipped set up or knocked down. Products that include "Shipped knocked down" in the description require some assembly. If this statement does not appear in the description, the product is shipped assembled.

Service problems are normally handled by a Herman Miller authorized dealer. Where this cannot be accomplished on a local level, service problems should be referred to the Customer Care Representative for your region, Herman Miller, Inc., Zeeland, Michigan 49464.

20-Day or Less/Assigned Lead-Time Shipments

All products and options in this price book not designated by an Assigned Program icon A will ship in **20 business days or less** after being acknowledged by Herman Miller.

Products and options designated by an A are on the assigned lead- time program and may ship in 20 days, less than 20 days, or more than 20 days from order acknowledgement.

OE1 Boundary

OE1 Height Adjustable Micro Packs

OE1 Communal Tables

OE1 Fixed Height Tables

OE1 Screens

OE1 Storage

OE1 Community Elements

OE1 Accessories

OE1 Agile Wall, Frame with Casters

HZ100.

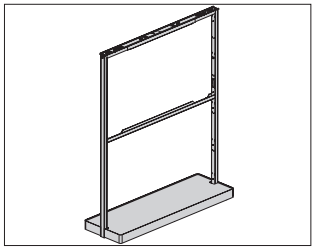

Product Information

Description

This frame holds individual tiles on both sides and accommodates lower shelving and comes on casters. Frame can adjoin to an adjacent OE1 Workspace Collection™ Agile Wall frame.

Notes

Order the following products separately:

- Upper tile (HZ130.) and lower tile (HZ140.)
- Bottom shelves (HZ150.)
- Monitor mount (HZ170.)

OE1 agile wall base finish matches frame finish.

Casters are non-locking and are concealed beneath the base.

Top alignment clip to adjoin multiple OE1 agile wall frames is included.

See planning guide for additional information.

Dimensions

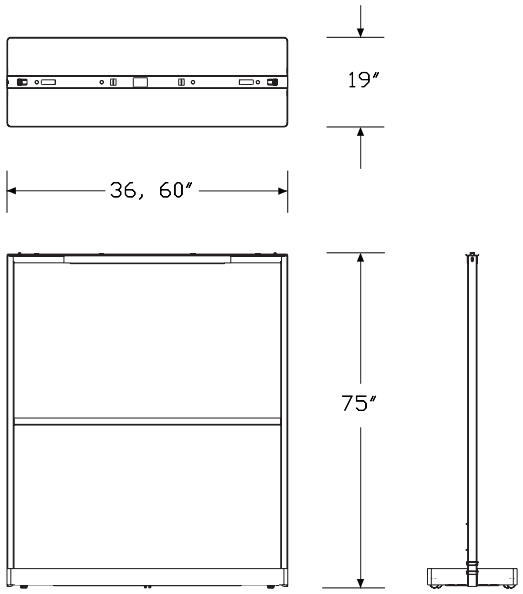

Specification Information

Step 1.

HZ100.

Step 2. Height

75	75″ high

Step 3. Width

36	36″ wide
60	60″ wide

Step 4. Frame Type

1	frame for tiles only
2	frame for tiles on top and shelving on bottom

Prices for Steps 1-4.

		1	2
HZ100. 75	**36**	$2893	2893
	60	$3708	3708

Step 5. Frame/Base Finish

Metallic Paint

For 36″ wide (36)

SNA	satin aluminum	+$80

Sand Texture Paint

For 36″ wide (36)

8Q	folkstone grey	+$0
91	white	+$0
98	studio white	+$0
BK	black	+$0
DB3	glacier	+$60
DN2	nightfall	+$60
DR1	canyon	+$60
OLF	olive	+$60

Metallic Paint

For 60″ wide (60)

SNA	satin aluminum	+$120

OE1 Agile Wall, Frame with Casters *continued*

Sand Texture Paint		
For 60" wide (60)		
8Q	folkstone grey	+$0
91	white	+$0
98	studio white	+$0
BK	black	+$0
DB3	glacier	+$100
DN2	nightfall	+$100
DR1	canyon	+$100
OLF	olive	+$100

OE1 Agile Wall, Frame with Glides HZ110.

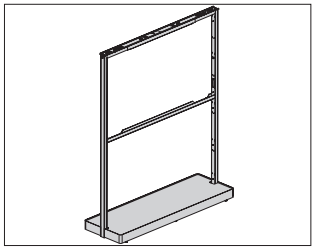

Product Information

Description

This frame holds individual tiles on both sides and accommodates lower shelving and comes on glides. Frame can adjoin to an adjacent OE1 Workspace Collection™ Agile Wall frame.

Notes

Glides provide 1½" of leveling adjustment.

Order the following products separately:

- Upper tile (HZ130.) and lower tile (HZ140.)
- Bottom shelves (HZ150.)
- Monitor mount (HZ170.)

OE1 agile wall base finish matches frame finish.

Top alignment clip to adjoin multiple OE1 agile wall frames is included.

See planning guide for additional information.

Dimensions

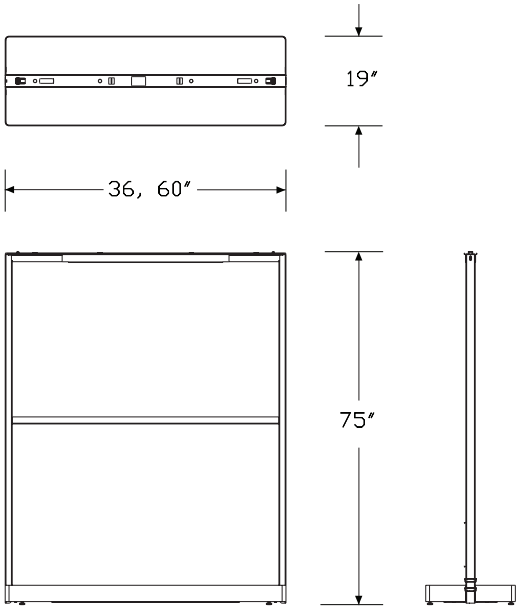

Specification Information

Step 1.

HZ110.

Step 2. Height

75	75" high

Step 3. Width

36	36" wide
60	60" wide

Step 4. Frame Type

1	frame for tiles only
2	frame for tiles on top and shelving on bottom

Prices for Steps 1-4.

		1	2
HZ110. 75	**36**	$2761	2761
	60	$3539	3539

Step 5. Frame/Base Finish

Metallic Paint

For 36" wide (36)

SNA	satin aluminum	+$80

Sand Texture Paint

For 36" wide (36)

8Q	folkstone grey	+$0
91	white	+$0
98	studio white	+$0
BK	black	+$0
DB3	glacier	+$60
DN2	nightfall	+$60
DR1	canyon	+$60
OLF	olive	+$60

Metallic Paint

For 60" wide (60)

SNA	satin aluminum	+$120

OE1 Agile Wall, Frame with Glides *continued*

Sand Texture Paint		
For 60" wide (60)		
8Q	folkstone grey	+$0
91	white	+$0
98	studio white	+$0
BK	black	+$0
DB3	glacier	+$100
DN2	nightfall	+$100
DR1	canyon	+$100
OLF	olive	+$100

OE1 Agile Wall, Frame with Glides, for Full Height Shelves HZ120.

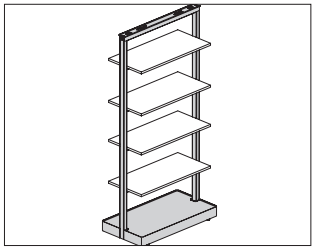

Product Information

Description

This frame accommodates full height shelving and comes on glides. Frame can adjoin to an adjacent OE1 Workspace Collection™ Agile Wall frame.

Notes

Glides provide 1½″ of leveling adjustment.

Order the following products separately:

• Full height shelves (HZ160.)

OE1 agile wall base finish matches frame finish.

Top alignment clip to adjoin multiple OE1 agile wall frames is included.

See planning guide for additional information.

Dimensions

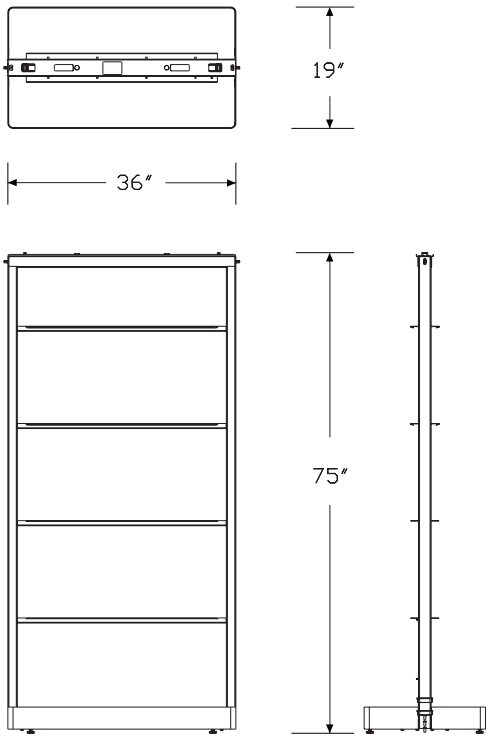

Specification Information

Step 1.

HZ120.

Step 2. Height

75	75″ high

Step 3. Width

36	36″ wide

Step 4. Frame Type

1	frame for full shelving

Prices for Steps 1-4.

		1
HZ120. 75 36		$2761

Step 5. Frame/Base Finish

Metallic Paint

SNA	satin aluminum	+$80

Sand Texture Paint

8Q	folkstone grey	+$0
91	white	+$0
98	studio white	+$0
BK	black	+$0
DB3	glacier	+$60
DN2	nightfall	+$60
DR1	canyon	+$60
OLF	olive	+$60

OE1 Agile Wall, Upper Tile HZ130.

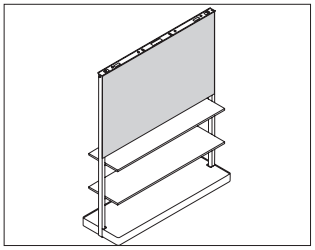

OE1 Boundary

Product Information

Description

This upper tile attaches to 1 side of a frame and is available in a tackable fabric, markerboard, laminate or veneer surface.

Notes

Specify width of tile to match width of frame.

Pair with OE1 frame with casters (HZ100.) or OE1 frame with glides (HZ110.), ordered separately.

Fabric version contains knockout for optional monitor mount. Order OE1 agile wall, monitor mount (HZ170.) separately.

When specifying tackable fabric, horizontal option (R), fabric direction is horizontal (railroaded).

Fabric-covered tile accepts Customer's Own Material (COM).
Width (Surface Material)—Yardage
36 (R)—1.23
36 (T)—1.23
60 (R)—1.95
For information on multiple quantities or nondirectional fabrics, contact COM Department. See Order Information in appendices.

See planning guide for additional information.

Dimensions

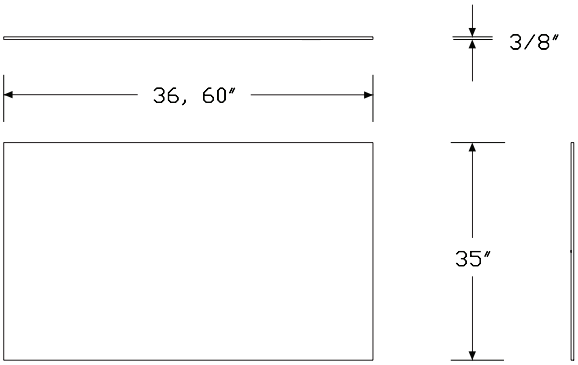

Specification Information

Step 1.

HZ130.

Step 2. Height

35	35″ high

Step 3. Width

36	36″ wide
60	60″ wide

Step 4. Surface Material

For 36″ wide (36)

T	tackable fabric
R	tackable fabric, horizontal
M	marker board
L	high-pressure laminate / thermoplastic edge
W	veneer/veneer edge

For 60″ wide (60)

R	tackable fabric, horizontal
M	marker board
L	high-pressure laminate / thermoplastic edge
W	veneer/veneer edge

Prices for Steps 1-4.

		T	R	M	L	W
HZ130. 35	**36**	$528	538	948	646	1161
	60	—	$806	1369	1132	2037

Step 5. Grain Direction

For high-pressure laminate / thermoplastic edge (L) or veneer/veneer edge (W)

HRG	horizontal grain	+$0
VTG	vertical grain	+$0

Step 6. Fabric

For 36″ wide (36) with tackable fabric (T), or tackable fabric, horizontal (R)

Price Category 1	+$0
Price Category 2	+$20
Price Category 3	+$46
Price Category 4	+$78
Price Category 5	+$130
Price Category C	+$110

For 60" wide (60) with tackable fabric, horizontal (R)	
Price Category 1	+$0
Price Category 2	+$31
Price Category 3	+$72
Price Category 4	+$122
Price Category 5	+$204
Price Category C	+$174

Step 7. Tile Finish

For high-pressure laminate / thermoplastic edge (L)		
28	canyon A	+$0
29	misted A	+$0
38	twilight A	+$0
39	desert A	+$0
76	light brown walnut	+$0
8Q	folkstone grey	+$0
91	white	+$0
98	studio white	+$0
CL	cool grey neutral	+$0
HF	inner tone light	+$0
HM	natural maple	+$0
HP	light anigre	+$0
HT	inner tone (discontinuing) A	+$0
HX	aged cherry	+$0
LBA	clear on ash	+$0
LBB	oak on ash	+$0
LBC	walnut on ash	+$0
LBF	neutral twill	+$0
LBJ	graphite twill	+$0
LBQ	white twill	+$0
LBR	phantom ecru A	+$0
LBS	phantom cocoa A	+$0
LBU	medium matte walnut A	+$0
LBV	warm grey teak A	+$0
LT	light tone	+$0
LU	soft white	+$0
WL	sandstone	+$0
WN	warm grey neutral	+$0
ZZ	open line high-pressure laminate (nonstandard) A	+$50

For 36" wide (36) with veneer/veneer edge (W)		
2U	light brown walnut A	+$85
40	dark brown walnut A	+$85
CHD	noble cherry A	+$85
ET	clear on ash A	+$85
EU	oak on ash A	+$85
EV	walnut on ash A	+$85
EW	medium matte walnut A	+$85
OK	white oak A	+$85
OU	walnut A	+$85
UL	natural maple A	+$85
WHN	natural white oak A	+$85

For 60" wide (60) with veneer/veneer edge (W)		
2U	light brown walnut A	+$85
40	dark brown walnut A	+$85
CHD	noble cherry A	+$85
ET	clear on ash A	+$85
EU	oak on ash A	+$85
EV	walnut on ash A	+$85
EW	medium matte walnut A	+$85
OK	white oak A	+$85
OU	walnut A	+$85
UL	natural maple A	+$85
WHN	natural white oak A	+$85

Step 8. Edge Finish		
For high-pressure laminate / thermoplastic edge (L)		
76	light brown walnut	+$0
8Q	folkstone grey	+$0
91	white	+$0
98	studio white	+$0
BU	black umber	+$0
CL	cool grey neutral	+$0
HF	inner tone light	+$0
HM	natural maple	+$0
HP	light anigre	+$0
HX	aged cherry	+$0
LBA	clear on ash	+$0
LBB	oak on ash	+$0
LBC	walnut on ash	+$0
LBF	neutral twill	+$0
LBJ	graphite twill	+$0
LBQ	white twill	+$0
LBR	phantom ecru	+$0
LBS	phantom cocoa	+$0
LBU	medium matte walnut	+$0
LBV	warm grey teak	+$0
LU	soft white	+$0
WL	sandstone	+$0
WN	warm grey neutral	+$0

Step 9. Markerboard Tray Finish		
For marker board (M)		

Metallic Paint		
SNA	satin aluminum	+$10

Smooth Paint		
8Q	folkstone grey	+$0
DB3	glacier	+$8
DN2	nightfall	+$8
DR1	canyon	+$8
OLF	olive	+$8
BK	black	+$0

OE1 Agile Wall, Lower Tile HZ140.

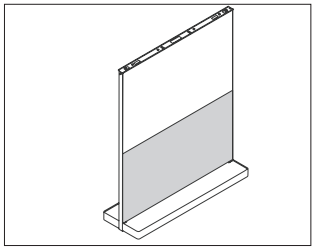

Product Information

Description

This lower tile attaches to 1 side of a frame and is available in a tackable fabric, laminate or veneer surface.

Notes

Specify width of tile to match width of frame.

Pair with OE1 frame with casters (HZ100.) or OE1 frame with glides (HZ110.), ordered separately.

For user power access, specify tackable fabric, horizontal, with power (RP) option. Order OE1 agile wall, monitor mount (HZ170.) separately.

The user power module option is only available as part of the monitor mount specification.

When specifying tackable fabric, horizontal option (R), fabric direction is horizontal (railroaded).

Fabric-covered tile accepts Customer's Own Material (COM).

Width (Surface Material)—Yardage

36 (R)—1.23

36 (T)—1.23

60 (R)—1.95

For information on multiple quantities or nondirectional fabrics, contact COM Department. See Order Information in appendices.

See planning guide for additional information.

Dimensions

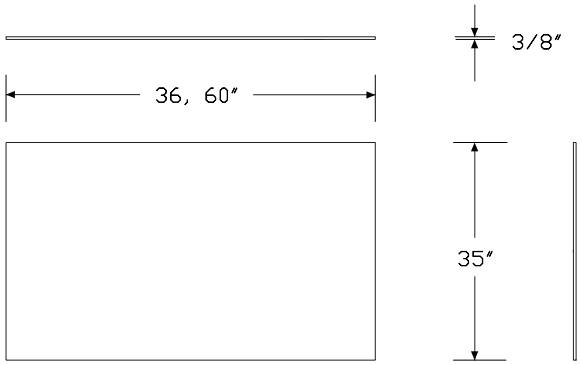

Specification Information

Step 1.

HZ140.

Step 2. Height

35 35″ high

Step 3. Width

36 36″ wide

60 60″ wide

Step 4. Surface Material

For 36″ wide (36)

TN tackable fabric without power

RN tackable fabric, horizontal, without power

LN high-pressure laminate/thermoplatic edge without power

WN veneer/veneer edge without power

For 60″ wide (60)

RN tackable fabric, horizontal, without power

RP tackable fabric, horizontal, with power

LN high-pressure laminate/thermoplatic edge without power

WN veneer/veneer edge without power

Prices for Steps 1-4.

		TN	RN	RP	LN	WN
HZ140. 35	**36**	$528	538	—	646	1161
	60	—	$806	806	1132	2037

Step 5. Grain Direction

For high-pressure laminate/thermoplatic edge without power (LN) or veneer/veneer edge without power (WN)

HRG	horizontal grain	+$0
VTG	vertical grain	+$0

Step 6. Fabric

For 36″ wide (36) with tackable fabric without power (TN), or tackable fabric, horizontal, without power (RN)

Price Category 1	+$0
Price Category 2	+$20
Price Category 3	+$46
Price Category 4	+$78
Price Category 5	+$130
Price Category C	+$110

For 60" wide (60) with tackable fabric, horizontal, without power (RN), or tackable fabric, horizontal, with power (RP)

Price Category 1	+$0
Price Category 2	+$31
Price Category 3	+$72
Price Category 4	+$122
Price Category 5	+$204
Price Category C	+$174

Step 7. Tile Finish

For high-pressure laminate/thermoplatic edge without power (LN)

28	canyon A	+$0
29	misted A	+$0
38	twilight A	+$0
39	desert A	+$0
76	light brown walnut	+$0
8Q	folkstone grey	+$0
91	white	+$0
98	studio white	+$0
CL	cool grey neutral	+$0
HF	inner tone light	+$0
HM	natural maple	+$0
HP	light anigre	+$0
HT	inner tone (discontinuing) A	+$0
HX	aged cherry	+$0
LBA	clear on ash	+$0
LBB	oak on ash	+$0
LBC	walnut on ash	+$0
LBF	neutral twill	+$0
LBJ	graphite twill	+$0
LBQ	white twill	+$0
LBR	phantom ecru A	+$0
LBS	phantom cocoa A	+$0
LBU	medium matte walnut A	+$0
LBV	warm grey teak A	+$0
LT	light tone	+$0
LU	soft white	+$0
WL	sandstone	+$0
WN	warm grey neutral	+$0
ZZ	open line high-pressure laminate (nonstandard) A	+$50

For 36" wide (36) with veneer/veneer edge without power (WN)

2U	light brown walnut A	+$85
40	dark brown walnut A	+$85
CHD	noble cherry A	+$85
ET	clear on ash A	+$85
EU	oak on ash A	+$85
EV	walnut on ash A	+$85
EW	medium matte walnut A	+$85
OK	white oak A	+$85
OU	walnut A	+$85
UL	natural maple A	+$85
WHN	natural white oak A	+$85

For 60" wide (60) with veneer/veneer edge without power (WN)

2U	light brown walnut A	+$85
40	dark brown walnut A	+$85
CHD	noble cherry A	+$85
ET	clear on ash A	+$85
EU	oak on ash A	+$85
EV	walnut on ash A	+$85
EW	medium matte walnut A	+$85
OK	white oak A	+$85
OU	walnut A	+$85
UL	natural maple A	+$85
WHN	natural white oak A	+$85

Step 8. Edge Finish		
For high-pressure laminate/thermoplatic edge without power (LN)		
76	light brown walnut	+$0
8Q	folkstone grey	+$0
91	white	+$0
98	studio white	+$0
BU	black umber	+$0
CL	cool grey neutral	+$0
HF	inner tone light	+$0
HM	natural maple	+$0
HP	light anigre	+$0
HX	aged cherry	+$0
LBA	clear on ash	+$0
LBB	oak on ash	+$0
LBC	walnut on ash	+$0
LBF	neutral twill	+$0
LBJ	graphite twill	+$0
LBQ	white twill	+$0
LBR	phantom ecru	+$0
LBS	phantom cocoa	+$0
LBU	medium matte walnut	+$0
LBV	warm grey teak	+$0
LU	soft white	+$0
WL	sandstone	+$0
WN	warm grey neutral	+$0

OE1 Agile Wall, Bottom Shelves HZ150.

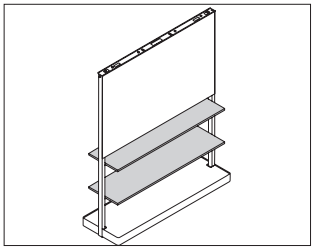

OE1 Boundary

Product Information

Description

These lower shelves pair with an OE1 Workspace Collection™ Agile Wall frame and are available in laminate or veneer. Package quantity is 2 shelves.

Notes

Pair with OE1 frame with casters (HZ100.) or OE1 frame with glides (HZ110.), ordered separately.

2 shelves are included.

Grain direction runs horizontally on the shelf.

See planning guide for additional information.

Dimensions

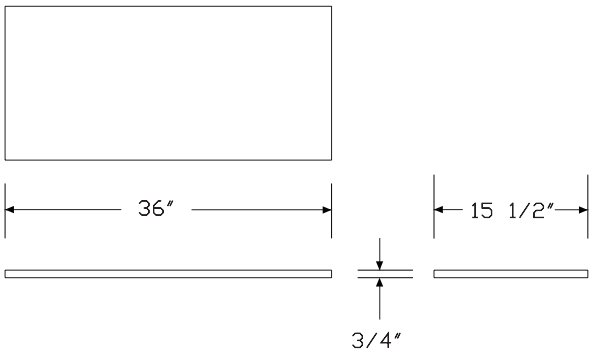

Specification Information

Step 1.

HZ150.

Step 2. Width

36	36″ wide
60	60″ wide

Step 3. Shelf Material

L	high-pressure laminate/thermoplastic edge
W	veneer/veneer edge

Prices for Steps 1-3.

		L	W
HZ150.	**36**	$475	1185
	60	$607	1514

Step 4. Shelf Finish

For high-pressure laminate/thermoplastic edge (L)

76	light brown walnut	+$0
8Q	folkstone grey	+$0
91	white	+$0
98	studio white	+$0
CL	cool grey neutral	+$0
G1	graphite	+$0
HM	natural maple	+$0
HP	light anigre	+$0
HX	aged cherry	+$0
LBA	clear on ash	+$0
LBB	oak on ash	+$0
LBC	walnut on ash	+$0
LBF	neutral twill	+$0
LBJ	graphite twill	+$0
LBQ	white twill	+$0
LBR	phantom ecru	+$0
LBS	phantom cocoa	+$0
LBU	medium matte walnut	+$0
LBV	warm grey teak	+$0
LU	soft white	+$0
WL	sandstone	+$0
WN	warm grey neutral	+$0

OE1 Agile Wall, Bottom Shelves

continued

For 36" wide (36) with veneer/veneer edge (W)		
2U	light brown walnut A	+$85
40	dark brown walnut A	+$85
CHD	noble cherry	+$85
ET	clear on ash A	+$85
EU	oak on ash A	+$85
EV	walnut on ash A	+$85
EW	medium matte walnut A	+$85
OK	white oak	+$85
OU	walnut A	+$85
UL	natural maple A	+$85
WHN	natural white oak	+$85

For 60" wide (60) with veneer/veneer edge (W)		
2U	light brown walnut A	+$85
40	dark brown walnut A	+$85
CHD	noble cherry	+$85
ET	clear on ash A	+$85
EU	oak on ash A	+$85
EV	walnut on ash A	+$85
EW	medium matte walnut A	+$85
OK	white oak	+$85
OU	walnut A	+$85
UL	natural maple A	+$85
WHN	natural white oak	+$85

Step 5. Edge Finish *For high-pressure laminate/thermoplastic edge (L)*		
76	light brown walnut	+$0
8Q	folkstone grey	+$0
91	white	+$0
98	studio white	+$0
BU	black umber	+$0
CL	cool grey neutral	+$0
G2	graphite satin	+$0
HF	inner tone light	+$0
HM	natural maple	+$0
HP	light anigre	+$0
HX	aged cherry	+$0
LBA	clear on ash	+$0
LBB	oak on ash	+$0
LBC	walnut on ash	+$0
LBF	neutral twill	+$0
LBJ	graphite twill	+$0
LBQ	white twill	+$0
LBR	phantom ecru	+$0
LBS	phantom cocoa	+$0
LBU	medium matte walnut	+$0
LBV	warm grey teak	+$0
LU	soft white	+$0
WL	sandstone	+$0
WN	warm grey neutral	+$0

OE1 Agile Wall, Full Height Shelves HZ160.

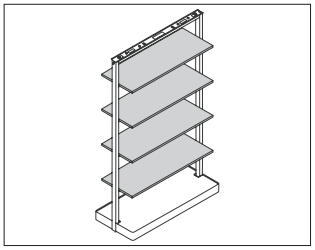

OE1 Boundary

Product Information

Description

These full height shelves pair with the OE1 Workspace Collection™ Agile Wall frame for full height shelves and are available in laminate or veneer. Package quantity is 4 shelves.

Notes

Pair with OE1 frame for full height shelves (HZ120.), ordered separately.

4 shelves are included.

Grain direction runs horizontally on the shelf.

See planning guide for additional information.

Dimensions

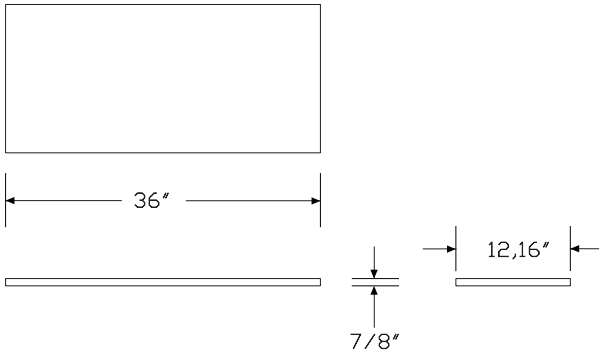

Specification Information

Step 1.

HZ160.

Step 2. Width

36	36″ wide

Step 3. Shelf Material

L	high-pressure laminate/thermoplastic edge
W	veneer/veneer edge

Prices for Steps 1-3.

	L	W
HZ160. 36	$1053	2630

Step 4. Shelf Finish

For high-pressure laminate/thermoplastic edge (L)

76	light brown walnut	+$0
8Q	folkstone grey	+$0
91	white	+$0
98	studio white	+$0
CL	cool grey neutral	+$0
G1	graphite	+$0
HM	natural maple	+$0
HP	light anigre	+$0
HX	aged cherry	+$0
LBA	clear on ash	+$0
LBB	oak on ash	+$0
LBC	walnut on ash	+$0
LBF	neutral twill	+$0
LBJ	graphite twill	+$0
LBQ	white twill	+$0
LBR	phantom ecru	+$0
LBS	phantom cocoa	+$0
LBU	medium matte walnut	+$0
LBV	warm grey teak	+$0
LU	soft white	+$0
WL	sandstone	+$0
WN	warm grey neutral	+$0

For 36" wide (36) with veneer/veneer edge (W)		
2U	light brown walnut A	+$85
40	dark brown walnut A	+$85
CHD	noble cherry	+$85
ET	clear on ash A	+$85
EU	oak on ash A	+$85
EV	walnut on ash A	+$85
EW	medium matte walnut A	+$85
OK	white oak	+$85
OU	walnut A	+$85
UL	natural maple A	+$85
WHN	natural white oak	+$85

Step 5. Edge Finish *For high-pressure laminate/thermoplastic edge (L)*		
76	light brown walnut	+$0
8Q	folkstone grey	+$0
91	white	+$0
98	studio white	+$0
BU	black umber	+$0
CL	cool grey neutral	+$0
G2	graphite satin	+$0
HF	inner tone light	+$0
HM	natural maple	+$0
HP	light anigre	+$0
HX	aged cherry	+$0
LBA	clear on ash	+$0
LBB	oak on ash	+$0
LBC	walnut on ash	+$0
LBF	neutral twill	+$0
LBJ	graphite twill	+$0
LBQ	white twill	+$0
LBR	phantom ecru	+$0
LBS	phantom cocoa	+$0
LBU	medium matte walnut	+$0
LBV	warm grey teak	+$0
LU	soft white	+$0
WL	sandstone	+$0
WN	warm grey neutral	+$0

OE1 Agile Wall, Monitor Mount HZ170.

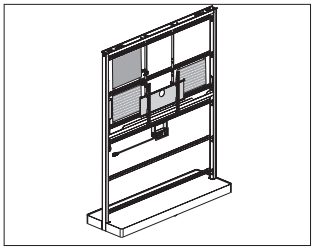

OE1 Boundary

Product Information

Description

This monitor mount pairs with the OE1 Workspace Collection™ fabric upper tile and provides 3 mounting configurations with the option for a user accessible power strip. Mount can be placed to accommodate a seated or standing posture.

Notes

Order the following products separately:

- OE1 fabric upper tile (HZ130.3560R)-for use with monitor mount
- OE1 fabric lower tile (HZ140.3560RP)-for use with user power on single side
- OE1 frame with casters (HZ100.) or OE1 frame with glides (HZ110.)

Monitor mount works on OE1 fabric upper tile (HZ130.) only.

When specifying user power (1P, 2P, 3P) options, order OE1 fabric lower tile (HZ140.3560RP) separately.

To mount 1 monitor on 1 side of an OE1 agile wall, specify monitor configuration (1).

To mount 2 monitors, 1 on each side of an OE1 agile wall at the same height, specify monitor configuration (2).

To mount 2 monitors, 1 on each side of an OE1 agile wall at different heights, specify monitor configuration (3).

See planning guide for additional information.

Dimensions

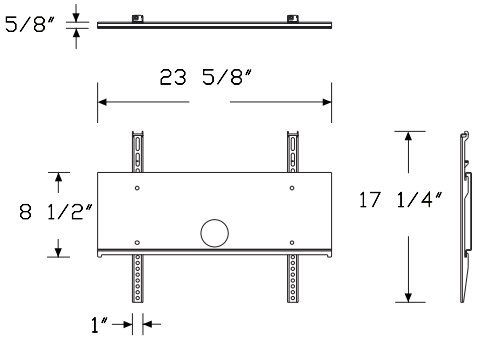

Specification Information

Step 1.

HZ170.

Step 2. Monitor Configuration

1	mounting one monitor at any height on upper tile
2	mounting two monitors at the same height, opposite sides on upper tile
3	mounting two monitors at different heights, opposite sides on upper tile

Step 3. User Power

N	no user power
P	user power on single side

Step 4. Interior Technology Support

N	no interior technology
T	interior power strip + technology panels

Prices for Steps 1-4.

			N	T
HZ170.	**1**	**N**	$948	1510
		P	$2079	2640
	2	**N**	$1185	1943
		P	$2390	3149
	3	**N**	$1421	2179
		P	$2629	3387

Step 5. Power Strip Finish

For user power on single side (P)

0H	black	+$0
0J	white	+$0

OE1 Mobile Easel Base HZ200.

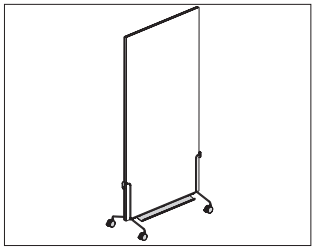

Product Information

Description

This Mobile Easel Base accepts an OE1 Workspace Collection™ Project Board and comes with an integrated accessory tray. Base is on casters that are lockable.

Notes

Use with OE1 Project Board (HZ210.), ordered separately.

OE1 Project Board secures into mobile base via a board latch.

Multiple Mobile Easel Bases can nest together for ease of storage.

Accessory tray finish matches specified base finish.

Metallic and satin paints are smooth.

Dimensions

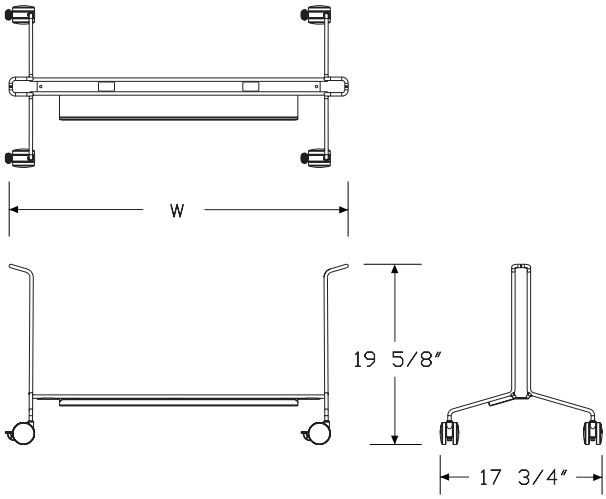

Specification Information

Step 1.

HZ200.

Step 2. Width

36	36″ wide	

Prices for Steps 1-2.

HZ200. 36		$1115

Step 3. Board Latch Finish

Sand Texture Paint

98	studio white	+$0
8Q	folkstone grey	+$0
BK	black	+$0

Step 4. Base Frame Finish

Metallic Paint

SNA	satin aluminum A	+$10

Sand Texture Paint

8Q	folkstone grey	+$0
91	white	+$0
98	studio white	+$0
BK	black	+$0
DB3	glacier A	+$8
DN2	nightfall A	+$8
DR1	canyon A	+$8
OLF	olive A	+$8

OE1 Project Board HZ210.

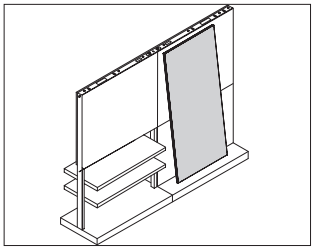

OE1 Boundary

Product Information

Description

This user-movable project board pairs with multiple products within the OE1 Workspace Collection™. It can connect into the OE1 Mobile Easel Base or OE1 Wall Rail Kit or rest against an OE1 Agile Wall frame. Board is available in markerboard or tackable fabric with an option for MicrobeCare™.

Notes

When specifying fabric project board (F) or fabric project board, with MicrobeCare™ (E), fabric direction is vertical.

Fabric is tackable.

Project board is compatible with the following products:

- OE1 mobile easel base (HZ200.)
- OE1 wall rail kit (HZ220.)
- OE1 agile wall frames (HZ100., HZ110.)
- OE1 flip chart hook, pair (HZ920.)
- OE1 marker cup (Y7235.)

Project board accepts Customer's Own Material (COM). COM requires 4.79 yards.

See planning guide for additional information.

Dimensions

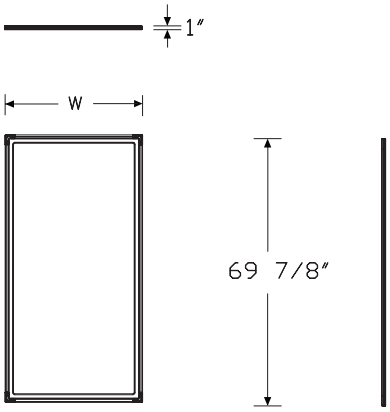

Specification Information

Step 1.

HZ210.

Step 2. Height

70	70″ high

Step 3. Width

36	36″ wide

Step 4. Project Board Type

E	fabric project board, with MicrobeCare™
F	fabric project board
M	markerboard project board

Prices for Steps 1-4.

	E	F	M
HZ210. 70 36	$2122	2043	1421

Step 5. Edge Finish

For markerboard project board (M)

WMB	markerboard white	+$0
8Q	folkstone grey	+$0
BK	black	+$0

Step 6. Fabric

For fabric project board, with MicrobeCare™ (E) or fabric project board (F)

Price Category 1	+$0
Price Category 2	+$73
Price Category 3	+$167
Price Category 4	+$287
Price Category 5	+$475
Price Category B	+$296
Price Category C	+$404
Price Category E	+$614

OE1 Wall Rail Kit HZ220.

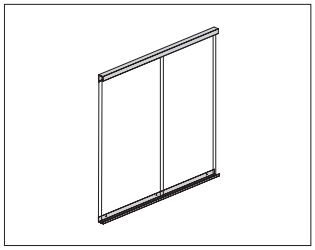

Product Information

Description

This set of top and bottom rails attaches to an architectural wall to accommodate OE1 Workspace Collection™ Project Boards. Screws to attach to wall are included; wall anchor must be sourced according to the installation guidelines for a given wall type.

Notes

36″ wide rails accommodate 1 project board vertically.

72″ wide rails accommodate 2 project boards vertically or 1 project board horizontally.

Metallic and satin paints are smooth.

Use with OE1 Project Board (HZ210.), ordered separately.

See planning guide for additional information.

Dimensions

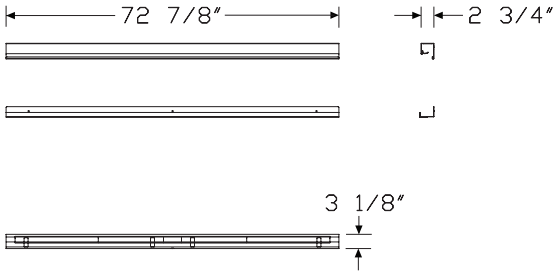

Specification Information

Step 1.

HZ220.

Step 2. Width

36	36″ wide for one vertical board
72	72″ wide for two vertical boards or one horizontal board

Prices for Steps 1-2.

HZ220.	**36**	$426
	72	$660

Step 3. Rail Finish

Metallic Paint

CN	metallic champagne	+$0
MS	metallic silver	+$0
SNA	satin aluminum	+$30
SNB	satin bronze	+$30
SNC	satin carbon	+$30

Sand Texture Paint

8Q	folkstone grey	+$0
91	white	+$0
98	studio white	+$0
BK	black	+$0
G1	graphite	+$0
WL	sandstone	+$0
DB3	glacier	+$20
DN2	nightfall	+$20
DR1	canyon	+$20
OLF	olive	+$20

OE1 Micro Pack, Single HZ300S

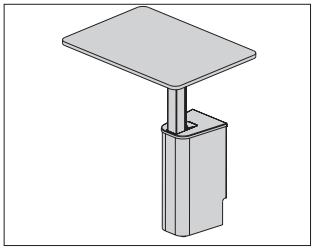

Product Information

Description

This unit is a height-adjustable surface mounted to an architectural wall. It comes with a cable management sleeve and 1 bag hook. Optional screen can be ordered separately. Available with several power options or without power.

Notes

Single Micro Pack is always wall mounted. Wall mounting hardware not included.

Electric height adjustment range is 27"-42".

Actual depth is 23.5". Actual width is 32.5".

Cable management sleeve mounts to the back of leg.

Included bag hook mounts in front of leg on the base.

Order optional screen and screen liner separately:

- OE1 micro pack privacy screen, single/4-pack (HZ330.)
- OE1 micro pack screen liner (HZ350.)

When power is specified, the Logic Mini unit is included with the product. It does not need to be ordered separately.

When power is specified, an AC splitter is included. It allows the Logic Mini and the Micro Pack to plug into it, and a single cord exits the Micro Pack base to plug into a wall outlet.

The single Micro Pack unit cannot be mounted directly over a floor core/outlet.

Dimensions

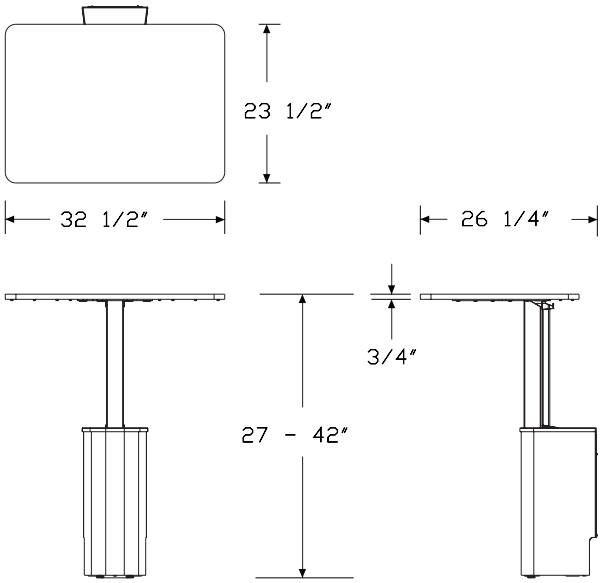

Specification Information

Step 1.

HZ300

Step 2. Edge

S.	squared-edge

Step 3. Depth

23	23″ deep

Step 4. Width

32	32″ wide

Step 5. Surface Material

L	high-pressure laminate top/thermoplastic edge
W	veneer top/veneer edge [A]
A	high-pressure laminate top/thermoplastic edge with MicrobeCare™ [A]
B	veneer top/veneer edge with MicrobeCare™ [A]

Step 6. Top Thickness

04	3/4″ thick

Step 7. Mechanism

E	electric

Step 8. User Power Type

N	no power
G	grommet mount
S	surface clamp
B	below surface attachment
M	grommet mount/below surface mount
C	surface clamp/below surface mount

Prices for Steps 1-8.

	L04EN	L04EG	L04ES	L04EB	L04EM	L04EC
HZ300S. 23 32	$3097	3617	3508	3508	4168	4060

	W04EN	W04EG	W04ES	W04EB	W04EM	W04EC
HZ300S. 23 32	$4023	4545	4435	4435	5096	4988

	A04EN	A04EG	A04ES	A04EB	A04EM	A04EC
HZ300S. 23 32	$3180	3701	3593	3593	4252	4144

	B04EN	B04EG	B04ES	B04EB	B04EM	B04EC
HZ300S. 23 32	$4108	4628	4520	4520	5180	5072

Step 9. Switch Option

SKS	rounded simple switch	+$0

Step 10. Grommet Power Access Cutout

For grommet mount (G) or grommet mount/below surface mount (M)

LC	left cutout for grommet mount Logic Mini for Micro Packs	+$0

Step 11. Power Configuration

For grommet mount (G), surface clamp (S), or below surface attachment (B)

J	1 simplex recptacle, 1 powered USB-A/USB-C combo	+$215
K	2 simplex receptacles	+$0

For grommet mount/below surface mount (M) or surface clamp/below surface mount (C)

L	1 simplex recptacle, 1 powered USB-A/USB-C combo on top/ 2 simplex recptacles on bottom	+$0

Step 12. Power Attachment Finish

For grommet mount (G), surface clamp (S), below surface attachment (B), grommet mount/below surface mount (M), or surface clamp/ below surface mount (C)

91	white	+$0
98	studio white	+$0
BK	black	+$0
G1	graphite	+$0

Step 13.

Top Finish

For high-pressure laminate top/thermoplastic edge (L) or high-pressure laminate top/thermoplastic edge with MicrobeCare™ (A)

76	light brown walnut	+$0
8Q	folkstone grey	+$0
91	white	+$0
98	studio white	+$0
CL	cool grey neutral	+$0
G1	graphite	+$0
HM	natural maple	+$0
HP	light anigre	+$0
HX	aged cherry	+$0
LBA	clear on ash	+$0
LBB	oak on ash	+$0
LBC	walnut on ash	+$0
LBF	neutral twill	+$0
LBJ	graphite twill	+$0
LBQ	white twill	+$0
LBR	phantom ecru	+$0
LBS	phantom cocoa	+$0
LBU	medium matte walnut	+$0
LBV	warm grey teak	+$0
LU	soft white	+$0
WL	sandstone	+$0
WN	warm grey neutral	+$0

Top/Edge Finish

For veneer top/veneer edge (W) or veneer top/veneer edge with MicrobeCare™ (B)

2U	light brown walnut A	+$85
40	dark brown walnut A	+$85
CHD	noble cherry	+$85
ET	clear on ash A	+$85
EU	oak on ash A	+$85
EV	walnut on ash A	+$85
EW	medium matte walnut A	+$85
OK	white oak (nonstandard) A	+$85
UL	natural maple A	+$85
WHN	natural white oak	+$85

Step 14. Edge Finish

For high-pressure laminate top/thermoplastic edge (L) or high-pressure laminate top/thermoplastic edge with MicrobeCare™ (A)

76	light brown walnut	+$0
8Q	folkstone grey	+$0
91	white	+$0
98	studio white	+$0
BU	black umber	+$0
CL	cool grey neutral	+$0
G2	graphite satin	+$0
HF	inner tone light	+$0
HM	natural maple	+$0
HP	light anigre	+$0
HX	aged cherry	+$0
LBA	clear on ash	+$0
LBB	oak on ash	+$0
LBC	walnut on ash	+$0
LBF	neutral twill	+$0
LBJ	graphite twill	+$0
LBQ	white twill	+$0
LBR	phantom ecru	+$0
LBS	phantom cocoa	+$0
LBU	medium matte walnut	+$0
LBV	warm grey teak	+$0
LU	soft white	+$0
WL	sandstone	+$0
WN	warm grey neutral	+$0

Step 15. Base Finish

Sand Texture Paint

8Q	folkstone grey	+$0
91	white	+$0
98	studio white	+$0
BK	black	+$0
DB3	glacier	+$175
DN2	nightfall	+$175
DR1	canyon	+$175
OLF	olive	+$175

OE1 Micro Pack, 3-Pack HZ310S

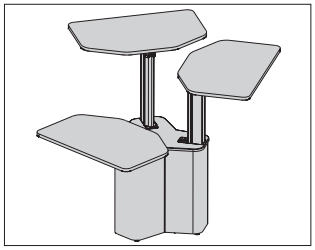

Product Information

Description

This freestanding unit is a pack of 3 height-adjustable surfaces. It comes with a cable management sleeve and 3 bag hooks. Optional screens can be ordered separately. Available with several power options or without power.

Notes

Electric height adjustment range is 27″-42″ above the floor.

Actual depth is 19.68″. Actual width is 30.3″.

Cable management sleeve mounts to the back of leg.

Included bag hooks can be mounted in front of each leg on the base.

Order optional screen and screen liner separately:

- OE1 micro pack privacy screen, 3-pack (HZ340.)
- OE1 micro pack screen liner (HZ350.)

When power is specified, the Logic Mini unit is included with the product. It does not need to be ordered separately.

When power is specified, an AC splitter is included. It allows the Logic Mini and the Micro Pack to plug into it, and a single cord exits the Micro Pack base to plug into a floor core, wall outlet, or Logic Reach unit.

The Micro Pack, 3-pack unit cannot be mounted directly over a floor core/outlet.

Dimensions

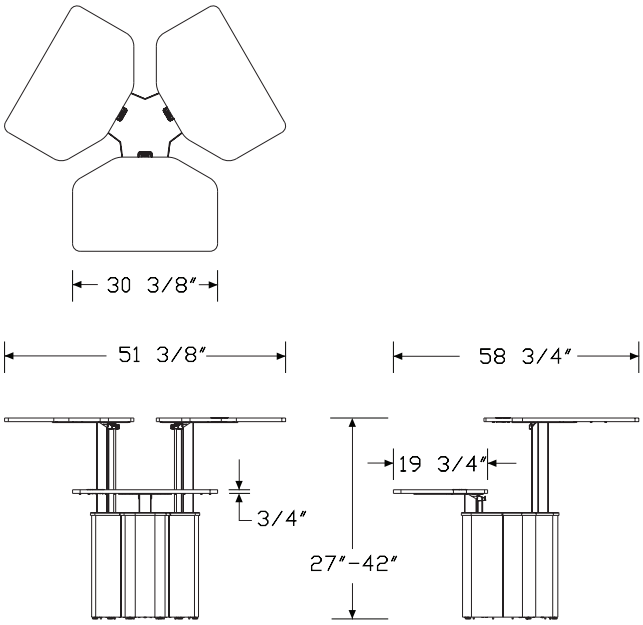

Specification Information

Step 1.

HZ310

Step 2. Edge

S. squared-edge

Step 3. Depth

20 20″ deep

Step 4. Width

31 31″ wide

Step 5. Surface Material

L high-pressure laminate top/thermoplastic edge
W veneer top/veneer edge A
A high-pressure laminate top/thermoplastic edge with MicrobeCare™ A
B veneer top/veneer edge with MicrobeCare™ A

Step 6. Top Thickness

04 3/4″ thick

Step 7. Mechanism

E electric

Step 8. User Power Type

N no power
G grommet mount
S surface clamp
B below surface attachment
M grommet mount/below surface mount
C surface clamp/below surface mount

Prices for Steps 1-8.

	L04EN	L04EG	L04ES	L04EB	L04EM	L04EC
HZ310S. 20 31	$8299	9860	9531	9531	11520	11191

	W04EN	W04EG	W04ES	W04EB	W04EM	W04EC
HZ310S. 20 31	$10788	12348	12020	12020	14009	13680

	A04EN	A04EG	A04ES	A04EB	A04EM	A04EC
HZ310S. 20 31	$8552	10114	9783	9783	11774	11444

	B04EN	B04EG	B04ES	B04EB	B04EM	B04EC
HZ310S. 20 31	$11041	12601	12271	12271	14262	13931

Step 9. Switch Option

SKS rounded simple switch +$0

Step 10. Grommet Power Access Cutout

For grommet mount (G) or grommet mount/below surface mount (M)

LC left cutout for grommet mount Logic Mini for Micro Packs +$0

Step 11. Power Configuration

For grommet mount (G), surface clamp (S), or below surface attachment (B)

J 1 simplex recptacle, 1 powered USB-A/USB-C combo +$645
K 2 simplex receptacles +$0

For grommet mount/below surface mount (M) or surface clamp/below surface mount (C)

L 1 simplex recptacle, 1 powered USB-A/USB-C combo on top/ 2 simplex recptacles on bottom +$0

Step 12. Power Attachment Finish

For grommet mount (G), surface clamp (S), below surface attachment (B), grommet mount/below surface mount (M), or surface clamp/ below surface mount (C)

91 white +$0
98 studio white +$0
BK black +$0
G1 graphite +$0

Step 13.

Top Finish

For high-pressure laminate top/thermoplastic edge (L) or high-pressure laminate top/thermoplastic edge with MicrobeCare™ (A)

76	light brown walnut	+$0
8Q	folkstone grey	+$0
91	white	+$0
98	studio white	+$0
CL	cool grey neutral	+$0
G1	graphite	+$0
HM	natural maple	+$0
HP	light anigre	+$0
HX	aged cherry	+$0
LBA	clear on ash	+$0
LBB	oak on ash	+$0
LBC	walnut on ash	+$0
LBF	neutral twill	+$0
LBJ	graphite twill	+$0
LBQ	white twill	+$0
LBR	phantom ecru	+$0
LBS	phantom cocoa	+$0
LBU	medium matte walnut	+$0
LBV	warm grey teak	+$0
LU	soft white	+$0
WL	sandstone	+$0
WN	warm grey neutral	+$0

Top/Edge Finish

For veneer top/veneer edge (W) or veneer top/veneer edge with MicrobeCare™ (B)

2U	light brown walnut A	+$85
40	dark brown walnut A	+$85
CHD	noble cherry	+$85
ET	clear on ash A	+$85
EU	oak on ash A	+$85
EV	walnut on ash A	+$85
EW	medium matte walnut A	+$85
OK	white oak (nonstandard) A	+$85
UL	natural maple A	+$85
WHN	natural white oak	+$85

Step 14. Edge Finish

For high-pressure laminate top/thermoplastic edge (L) or high-pressure laminate top/thermoplastic edge with MicrobeCare™ (A)

76	light brown walnut	+$0
8Q	folkstone grey	+$0
91	white	+$0
98	studio white	+$0
BU	black umber	+$0
CL	cool grey neutral	+$0
G2	graphite satin	+$0
HF	inner tone light	+$0
HM	natural maple	+$0
HP	light anigre	+$0
HX	aged cherry	+$0
LBA	clear on ash	+$0
LBB	oak on ash	+$0
LBC	walnut on ash	+$0
LBF	neutral twill	+$0
LBJ	graphite twill	+$0
LBQ	white twill	+$0
LBR	phantom ecru	+$0
LBS	phantom cocoa	+$0
LBU	medium matte walnut	+$0
LBV	warm grey teak	+$0
LU	soft white	+$0
WL	sandstone	+$0
WN	warm grey neutral	+$0

Step 15. Base Finish

Sand Texture Paint

8Q	folkstone grey	+$0
91	white	+$0
98	studio white	+$0
BK	black	+$0
DB3	glacier	+$420
DN2	nightfall	+$420
DR1	canyon	+$420
OLF	olive	+$420

OE1 Micro Pack, 4-Pack HZ320S

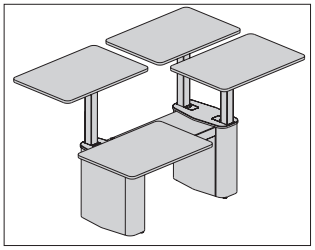

Product Information

Description

This freestanding unit is a pack of 4 height-adjustable surfaces. It comes with a cable management sleeve and 4 bag hooks. Optional screens can be ordered separately. Available with several power options or without power.

Notes

Electric height adjustment range is 27″-42″ above the floor.

Actual depth is 22.5″. Actual width is 32.5″.

Overall width of 4-pack is 70″. Width aligns with 70″-wide center screen.

Cable management sleeve mounts to the back of leg.

Included bag hooks can be mounted in front of each leg on the base or on the side of the left and right bases.

Order optional screens and screen liner separately:

- OE1 micro pack privacy screen, single/4-pack (HZ330.)
- OE1 micro pack screen liner (HZ350.)
- OE1 micro pack center screen, 4-pack, flat edge (HZ360.)
- OE1 micro pack center screen, 4-pack, Pari (HZ370.)
- OE1 micro pack center screen, 4-pack, laminate (HZ380.)

When power is specified, the Logic Mini unit is included with the product. It does not need to be ordered separately.

When power is specified, an AC splitter is included. It allows the Logic Mini and the Micro Pack to plug into it, and a single cord exits the Micro Pack base to plug into a floor core, wall outlet, or Logic Reach unit.

The Micro Pack, 4-pack unit cannot be mounted directly over a floor core/outlet.

When specifying grommet power access cutout (LR) option, 2 of the 4 surfaces will have a left-hand cutout and the other 2 surfaces will have a right-hand cutout. At time of installation, the choice can be made to have cutouts inbound or outbound.

Dimensions

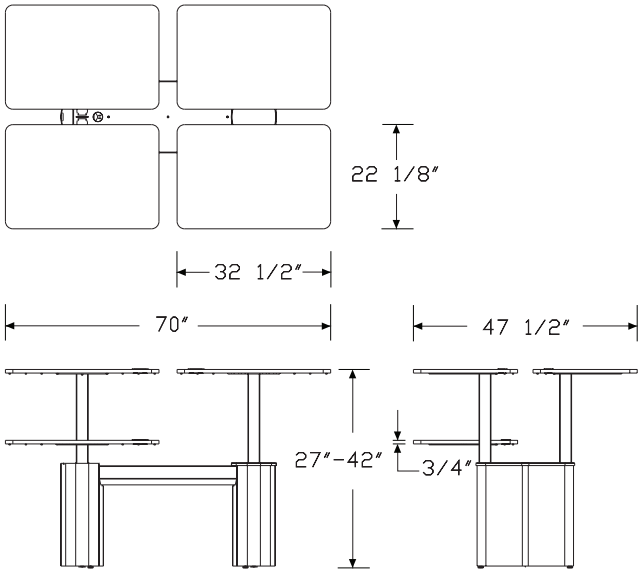

Specification Information

Step 1.

HZ320

Step 2. Edge

S.	squared-edge

Step 3. Depth

23	23″ deep

Step 4. Width

33	33″ wide

Step 5. Surface Material

L	high-pressure laminate top/thermoplastic edge
W	veneer top/veneer edge [A]
A	high-pressure laminate top/thermoplastic edge with MicrobeCare™ [A]
B	veneer top/veneer edge with MicrobeCare™ [A]

Step 6. Top Thickness

04	3/4″ thick

Step 7. Mechanism

E	electric

Step 8. User Power Type

N	no power
G	grommet mount
S	surface clamp
B	below surface attachment
M	grommet mount/below surface mount
C	surface clamp/below surface mount

Prices for Steps 1-8.

	L04EN	L04EG	L04ES	L04EB	L04EM	L04EC
HZ320S. 23 33	$11789	12982	12544	12544	16886	16448

	W04EN	W04EG	W04ES	W04EB	W04EM	W04EC
HZ320S. 23 33	$15500	16694	16256	16256	20597	20159

	A04EN	A04EG	A04ES	A04EB	A04EM	A04EC
HZ320S. 23 33	$12126	13320	12881	12881	17223	16785

	B04EN	B04EG	B04ES	B04EB	B04EM	B04EC
HZ320S. 23 33	$15837	17031	16593	16593	20935	20497

Step 9. Switch Option

SKS	rounded simple switch	+$0

Step 10. Grommet Power Access Cutout

For grommet mount (G) or grommet mount/below surface mount (M)

LR	left and right cutout for logic mini for micro packs	+$0

Step 11. Power Configuration

For grommet mount (G), surface clamp (S), or below surface attachment (B)

J	1 simplex recptacle, 1 powered USB-A/USB-C combo	+$860
K	2 simplex receptacles	+$0

For grommet mount/below surface mount (M) or surface clamp/below surface mount (C)

L	1 simplex recptacle, 1 powered USB-A/USB-C combo on top/ 2 simplex recptacles on bottom	+$0

Step 12. Power Attachment Finish

For grommet mount (G), surface clamp (S), below surface attachment (B), grommet mount/below surface mount (M), or surface clamp/ below surface mount (C)

91	white	+$0
98	studio white	+$0
BK	black	+$0
G1	graphite	+$0

Step 13.

Top Finish

For high-pressure laminate top/thermoplastic edge (L) or high-pressure laminate top/thermoplastic edge with MicrobeCare™ (A)

76	light brown walnut	+$0
8Q	folkstone grey	+$0
91	white	+$0
98	studio white	+$0
CL	cool grey neutral	+$0
G1	graphite	+$0
HM	natural maple	+$0
HP	light anigre	+$0
HX	aged cherry	+$0
LBA	clear on ash	+$0
LBB	oak on ash	+$0
LBC	walnut on ash	+$0
LBF	neutral twill	+$0
LBJ	graphite twill	+$0
LBQ	white twill	+$0
LBR	phantom ecru	+$0
LBS	phantom cocoa	+$0
LBU	medium matte walnut	+$0
LBV	warm grey teak	+$0
LU	soft white	+$0
WL	sandstone	+$0
WN	warm grey neutral	+$0

Top/Edge Finish

For veneer top/veneer edge (W) or veneer top/veneer edge with MicrobeCare™ (B)

2U	light brown walnut A	+$85
40	dark brown walnut A	+$85
CHD	noble cherry	+$85
ET	clear on ash A	+$85
EU	oak on ash A	+$85
EV	walnut on ash A	+$85
EW	medium matte walnut A	+$85
OK	white oak (nonstandard) A	+$85
UL	natural maple A	+$85
WHN	natural white oak	+$85

Step 14. Edge Finish

For high-pressure laminate top/thermoplastic edge (L) or high-pressure laminate top/thermoplastic edge with MicrobeCare™ (A)

76	light brown walnut	+$0
8Q	folkstone grey	+$0
91	white	+$0
98	studio white	+$0
BU	black umber	+$0
CL	cool grey neutral	+$0
G2	graphite satin	+$0
HF	inner tone light	+$0
HM	natural maple	+$0
HP	light anigre	+$0
HX	aged cherry	+$0
LBA	clear on ash	+$0
LBB	oak on ash	+$0
LBC	walnut on ash	+$0
LBF	neutral twill	+$0
LBJ	graphite twill	+$0
LBQ	white twill	+$0
LBR	phantom ecru	+$0
LBS	phantom cocoa	+$0
LBU	medium matte walnut	+$0
LBV	warm grey teak	+$0
LU	soft white	+$0
WL	sandstone	+$0
WN	warm grey neutral	+$0

Step 15. Base Finish

Sand Texture Paint

8Q	folkstone grey	+$0
91	white	+$0
98	studio white	+$0
BK	black	+$0
DB3	glacier	+$590
DN2	nightfall	+$590
DR1	canyon	+$590
OLF	olive	+$590

OE1 Micro Pack Privacy Screen, Single/4-Pack HZ330.

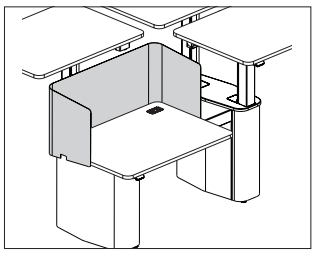

Product Information

Description

This metal screen attaches to the surface of the OE1 Workspace Collection™ Micro Pack, 4-Pack and Micro Pack, Single. Attachment hardware included. Package contains 1 screen.

Notes

Screen is used on the surface of the OE1 single Micro Pack (HZ300) and 4-pack (HZ320). It attaches directly to the surface.

Order felt screen liner (HZ350.) separately.

Dimensions

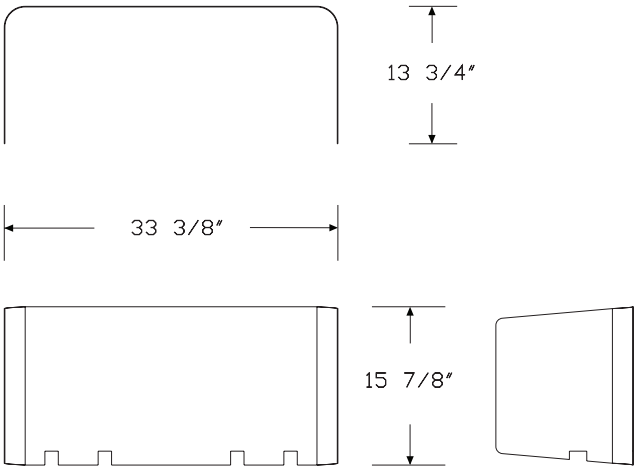

Specification Information

Step 1.

HZ330.

Step 2. Height

14	14″ high (from top of surface to top of screen)

Step 3. Width

33	33″ wide

Prices for Steps 1-3.

	33
HZ330. 14	$660

Step 4. Screen Finish

Sand Texture Paint

8Q	folkstone grey	+$0
91	white	+$0
98	studio white	+$0
BK	black	+$0
DB3	glacier	+$10
DN2	nightfall	+$10
DR1	canyon	+$10
OLF	olive	+$10

OE1 Micro Pack Privacy Screen, 3-Pack HZ340.

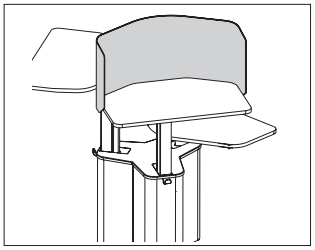

Product Information

Description

This metal screen attaches to the surface of the OE1 Workspace Collection™ Micro Pack, 3-Pack. Attachment hardware included. Package contains 1 screen.

Notes

Screen is used on the surface of the OE1 Micro Pack, 3-pack (HZ310). It attaches directly to the surface.

Order felt screen liner (HZ350.) separately.

Dimensions

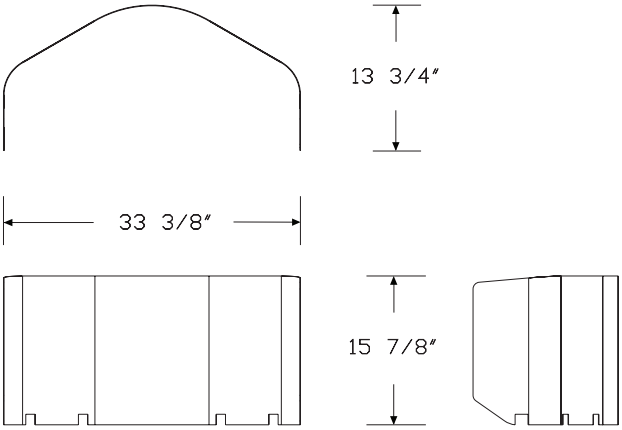

Specification Information

Step 1.

HZ340.

Step 2. Height

14	14″ high (from top of surface to top of screen)

Step 3. Width

32	32″ wide

Prices for Steps 1-3.

	32
HZ340. 14	$627

Step 4. Screen Finish

Sand Texture Paint

8Q	folkstone grey	+$0
91	white	+$0
98	studio white	+$0
BK	black	+$0
DB3	glacier	+$10
DN2	nightfall	+$10
DR1	canyon	+$10
OLF	olive	+$10

OE1 Micro Pack Screen Liner HZ350.

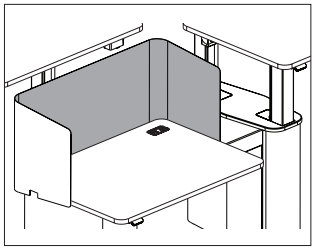

Product Information

Description

This felt liner attaches magnetically to the metal surface-mounted OE1 Workspace Collection™ Micro Pack screen. It provides softness and a touch of color. Package contains 1 liner.

Notes

Order the following Micro Pack screens separately:

- OE1 micro pack privacy screen, single/4-pack (HZ330.)
- OE1 micro pack privacy screen, 3-pack (HZ340.)

Dimensions

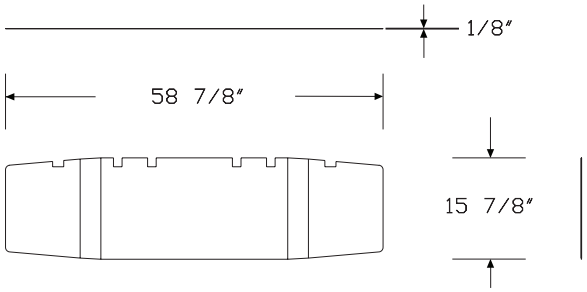

Specification Information

Step 1.

HZ350.

Step 2. Liner Type

1	liner for single micro pack or 4-pack micro pack
2	liner for 3-pack micro pack

Prices for Steps 1-2.

HZ350.	**1**	$437
	2	$437

Step 3. Screen Liner Fabric

Price Category 4	+$0

OE1 Micro Pack Center Screen, 4-Pack, Flat Edge

HZ360.

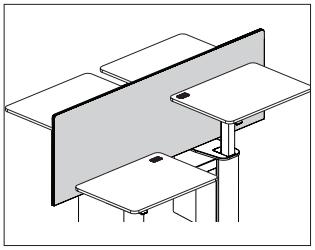

Product Information

Description

This screen provides privacy between surfaces of the OE1 Workspace Collection™ Micro Pack, 4-Pack. Installed height of the screen is 46″ or 53″. Attachment hardware included.

Notes

Screen accepts Customer's Own Material (COM). Yardage is estimated.

Height—Yards

23 (to reach 46″ high datum)—2.46

30 (to reach 53″ high datum)—4.91

Dimensions

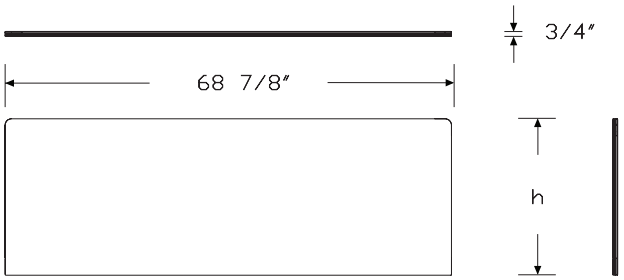

Specification Information

Step 1.

HZ360.

Step 2. Height

23	23″ high (to reach the 46″ high datum)
30	30″ high (to reach 53″ datum)

Step 3. Width

70	70″ wide

Step 4. Surface Material

D	tackable fabric, horizontal with MicrobeCare™
R	tackable fabric, horizontal

Prices for Steps 1-4.

	D	R
HZ360. 23 70	$1271	1191
30 70	$1518	1437

Step 5. Fabric

For 23″ high (to reach the 46″ high datum) (23)	
Price Category 1	+$0
Price Category 2	+$23
Price Category 3	+$55
Price Category 4	+$97
Price Category 5	+$166
Price Category B	+$0
Price Category C	+$236
Price Category E	+$356

For 30″ high (to reach 53″ datum) (30)	
Price Category 1	+$0
Price Category 2	+$46
Price Category 3	+$109
Price Category 4	+$196
Price Category 5	+$331
Price Category B	+$0
Price Category C	+$472
Price Category E	+$713

OE1 Micro Pack Center Screen, 4-Pack, Pari

HZ370.

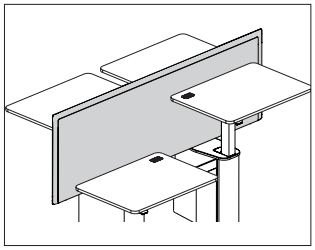

Product Information

Description

This screen provides privacy between surfaces of the OE1 Workspace Collection™ Micro Pack, 4-Pack. Installed height of the screen is 46″ or 53″. Attachment hardware included.

Notes

Screen accepts Customer's Own Material (COM). Yardage is estimated.

Height—Yards

23 (to reach 46″ high datum)—2.46

30 (to reach 53″ high datum)—4.91

Dimensions

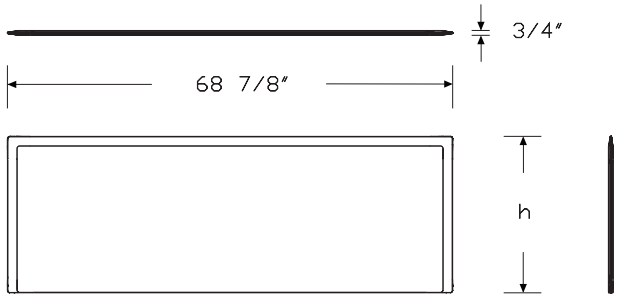

Specification Information

Step 1.

HZ370.

Step 2. Height

23	23″ high (to reach the 46″ high datum)
30	30″ high (to reach 53″ datum)

Step 3. Width

70	70″ wide

Step 4. Surface Material

D	tackable fabric, horizontal with MicrobeCare™
R	tackable fabric, horizontal

Prices for Steps 1-4.

	D	R
HZ370. 23 70	$1450	1371
30 70	$1738	1657

Step 5. Fabric

For 23" high (to reach the 46" high datum) (23)

Price Category 1	+$0
Price Category 2	+$23
Price Category 3	+$55
Price Category 4	+$97
Price Category 5	+$166
Price Category B	+$0
Price Category C	+$236
Price Category E	+$356

For 30" high (to reach 53" datum) (30)

Price Category 1	+$0
Price Category 2	+$46
Price Category 3	+$109
Price Category 4	+$196
Price Category 5	+$331
Price Category B	+$0
Price Category C	+$472
Price Category E	+$713

OE1 Micro Pack Center Screen, 4-Pack, Laminate HZ380.

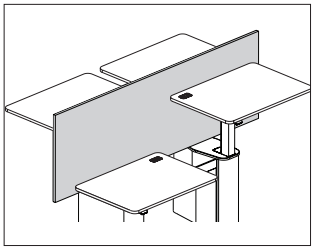

Product Information

Description

This screen provides privacy between surfaces of the OE1 Workspace Collection™ Micro Pack, 4-Pack. Installed height of the screen is 46″ or 53″. Attachment hardware included.

Dimensions

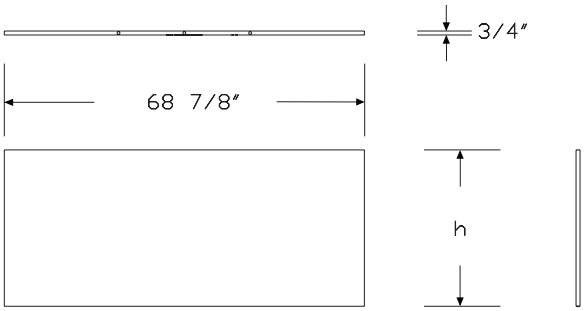

Specification Information

Step 1.

HZ380.

Step 2. Height

23	23″ high (to reach the 46″ high datum)
30	30″ high (to reach 53″ datum)

Step 3. Width

70	70″ wide

Step 4. Surface Material

L	high-pressure laminate top/thermoplastic edge

Prices for Steps 1-4.

		L
HZ380.	**23 70**	$741
	30 70	$889

Step 5. Grain Direction

HRG	horizontal grain	+$0

Step 6. Surface Finish

76	light brown walnut	+$0
8Q	folkstone grey	+$0
91	white	+$0
98	studio white	+$0
CL	cool grey neutral	+$0
G1	graphite	+$0
HM	natural maple	+$0
HP	light anigre	+$0
HX	aged cherry	+$0
LBA	clear on ash	+$0
LBB	oak on ash	+$0
LBC	walnut on ash	+$0
LBF	neutral twill	+$0
LBJ	graphite twill	+$0
LBQ	white twill	+$0
LBR	phantom ecru	+$0
LBS	phantom cocoa	+$0
LBU	medium matte walnut	+$0
LBV	warm grey teak	+$0
LU	soft white	+$0
WL	sandstone	+$0
WN	warm grey neutral	+$0

OE1 Micro Pack Center Screen, 4-Pack, Laminate *continued*

Step 7. Edge Finish		
76	light brown walnut	+$0
8Q	folkstone grey	+$0
91	white	+$0
98	studio white	+$0
BU	black umber	+$0
CL	cool grey neutral	+$0
G2	graphite satin	+$0
HF	inner tone light	+$0
HM	natural maple	+$0
HP	light anigre	+$0
HX	aged cherry	+$0
LBA	clear on ash	+$0
LBB	oak on ash	+$0
LBC	walnut on ash	+$0
LBF	neutral twill	+$0
LBJ	graphite twill	+$0
LBQ	white twill	+$0
LBR	phantom ecru	+$0
LBS	phantom cocoa	+$0
LBU	medium matte walnut	+$0
LBV	warm grey teak	+$0
LU	soft white	+$0
WL	sandstone	+$0
WN	warm grey neutral	+$0

OE1 One-Piece Standing Communal Table, Single Sided

HZ400S

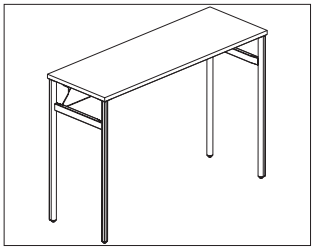

Product Information

Description

This OE1 Workspace Collection™ standing-height, single-sided Communal Table has a laminate top with thermoplastic edge, laminate top with thermoplastic-backed plywood edge, or veneer top and edge. Available with cutouts to accommodate Herman Miller power options that are ordered separately.

Notes

Cutouts for single-sided Communal Table are for rectangular Logic Mini units only.

Counterweights must be specified when using screens with this table. See OE1 planning guide for more information.

Dimensions

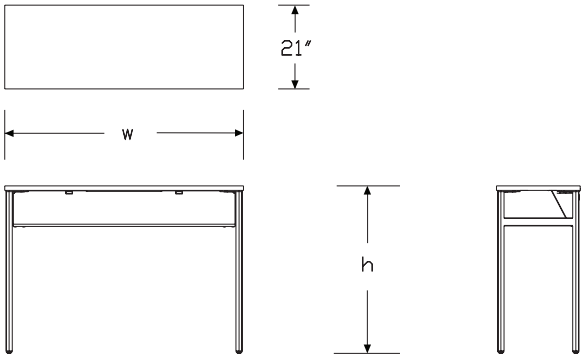

Specification Information

Step 1.

HZ400

Step 2. Edge

S. squared-edge

Step 3. Height

36 36″ high (counter height)
42 42″ high (bar height)

Step 4. Depth

21 21″ deep

Step 5. Width

60 60″ wide
72 72″ wide
96 96″ wide

Step 6. Surface Material

L high-pressure laminate top/thermoplastic edge
U high-pressure laminate/universal edge
W veneer top/veneer edge [A]
A high-pressure laminate top/thermoplastic edge with MicrobeCare™ [A]
C high-pressure laminate top/universal edge with MicrobeCare™ [A]

Prices for Steps 1-6.

	60L	60U	60W	60A	60C	72L
HZ400S. 36 21	$4133	4133	5042	4230	4230	4391
42 21	$3614	3614	4412	3712	3712	3873

	72U	72W	72A	72C	96L	96U
HZ400S. 36 21	$4391	5357	4488	4488	4650	4650
42 21	$3873	4726	3970	3970	4133	4133

	96W	96A	96C
HZ400S. 36 21	$5675	4760	4760
42 21	$5042	4242	4242

OE1 One-Piece Standing Communal Table, Single Sided

continued

Step 7. Power Access Cutout		
For 60" wide (60) or 72" wide (72)		
1	one centered cutout for Logic Mini (rectangle) - Y1414 & Y1412	+$65
2	two cutouts for Logic Mini Vine (rectangle) - Y1415 & Y1412	+$130
N	no cutouts	+$0
For 96" wide (96)		
2	two cutouts for Logic Mini Vine (rectangle) - Y1415 & Y1412	+$130
N	no cutouts	+$0

Step 8. Counterweight		
For 60" wide (60)		
F	for use with fabric screen	+$0
M	for use with metal modesty screen	+$80
N	no screen	+$0
For 72" wide (72)		
F	for use with fabric screen	+$80
M	for use with metal modesty screen	+$160
N	no screen	+$0
For 96" wide (96)		
F	for use with fabric screen	+$160
M	for use with metal modesty screen	+$240
N	no screen	+$0

Step 9.		
Top Finish		
For high-pressure laminate top/thermoplastic edge (L), high-pressure laminate/universal edge (U), high-pressure laminate top/thermoplastic edge with MicrobeCare™ (A), or high-pressure laminate top/universal edge with MicrobeCare™ (C)		
76	light brown walnut	+$0
8Q	folkstone grey	+$0
91	white	+$0
98	studio white	+$0
CL	cool grey neutral	+$0
HF	inner tone light	+$0
HM	natural maple	+$0
HP	light anigre	+$0
HX	aged cherry	+$0
LBA	clear on ash	+$0
LBB	oak on ash	+$0
LBC	walnut on ash	+$0
LBF	neutral twill	+$0
LBJ	graphite twill	+$0
LBQ	white twill	+$0
LBR	phantom ecru A	+$0
LBS	phantom cocoa A	+$0
LBU	medium matte walnut A	+$0
LBV	warm grey teak A	+$0
LT	light tone	+$0
LU	soft white	+$0
WL	sandstone	+$0
WN	warm grey neutral	+$0
Top/Edge Finish		
For veneer top/veneer edge (W)		
2U	light brown walnut A	+$200
40	dark brown walnut A	+$200
CHD	noble cherry	+$200
ET	clear on ash A	+$0
EU	oak on ash A	+$0
EV	walnut on ash A	+$0
EW	medium matte walnut A	+$200
OK	white oak (nonstandard) A	+$200
UL	natural maple A	+$0
WHN	natural white oak	+$200

OE1 One-Piece Standing Communal Table, Single Sided

continued

Step 10. Edge Finish

For high-pressure laminate top/thermoplastic edge (L) or high-pressure laminate top/thermoplastic edge with MicrobeCare™ (A)

76	light brown walnut	+$0
8Q	folkstone grey	+$0
91	white	+$0
98	studio white	+$0
BU	black umber	+$0
CL	cool grey neutral	+$0
HF	inner tone light	+$0
HM	natural maple	+$0
HP	light anigre	+$0
HX	aged cherry	+$0
LBA	clear on ash	+$0
LBB	oak on ash	+$0
LBC	walnut on ash	+$0
LBF	neutral twill	+$0
LBJ	graphite twill	+$0
LBQ	white twill	+$0
LBR	phantom ecru	+$0
LBS	phantom cocoa	+$0
LBU	medium matte walnut	+$0
LBV	warm grey teak	+$0
LU	soft white	+$0
WL	sandstone	+$0

For high-pressure laminate/universal edge (U) or high-pressure laminate top/universal edge with MicrobeCare™ (C)

PLY	plywood edge	+$50

Step 11. Base Finish

Metallic Paint

CN	metallic champagne	+$0
MS	metallic silver	+$0
SNA	satin aluminum	+$135
SNB	satin bronze	+$135
SNC	satin carbon	+$135

Sand Texture Paint

8Q	folkstone grey	+$0
91	white	+$0
98	studio white	+$0
BK	black	+$0
G1	graphite	+$0
WL	sandstone	+$0
DB3	glacier	+$125
DN2	nightfall	+$125
DR1	canyon	+$125
OLF	olive	+$125

OE1 One-Piece Seated Communal Table, Single Sided

HZ405S

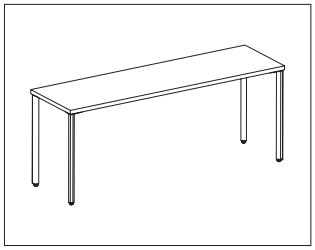

Product Information

Description

This OE1 Workspace Collection™ seated-height, single-sided Communal Table has a laminate top with thermoplastic edge, laminate top with thermoplastic-backed plywood edge, or veneer top and edge. Available with cutouts to accommodate Herman Miller power options that are ordered separately.

Notes

Cutouts for single-sided Communal Table are for rectangular Logic Mini units only.

Table includes stiffener.

Dimensions

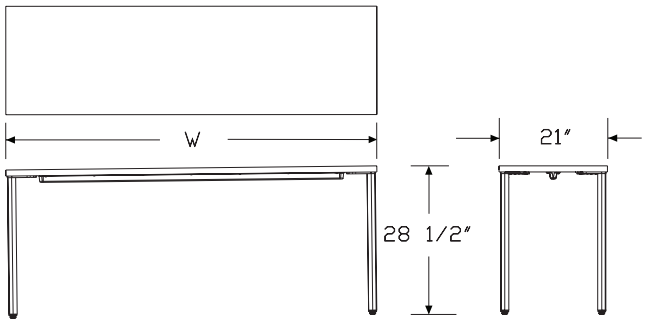

Specification Information

Step 1.

HZ405

Step 2. Edge

S. squared-edge

Step 3. Height

29 28.5″ high (seated height)

Step 4. Depth

21 21″ deep

Step 5. Width

60 60″ wide

72 72″ wide

Step 6. Surface Material

L high-pressure laminate top/thermoplastic edge

U high-pressure laminate/universal edge

W veneer top/veneer edge A

A high-pressure laminate top/thermoplastic edge with MicrobeCare™ A

C high-pressure laminate top/universal edge with MicrobeCare™ A

Prices for Steps 1-6.

	60L	60U	60W	60A	60C	72L
HZ405S. 29 21	$1426	1426	2138	1523	1523	1555

	72U	72W	72A	72C
HZ405S. 29 21	$1555	2331	1652	1652

Step 7. Power Access Cutout

N	no cutouts	+$0
1	one centered cutout for Logic Mini (rectangle) - Y1414 & Y1412	+$65
2	two cutouts for Logic Mini Vine (rectangle) - Y1415 & Y1412	+$130

OE1 One-Piece Seated Communal Table, Single Sided

continued

Step 8.

Top Finish

For high-pressure laminate top/thermoplastic edge (L), high-pressure laminate/universal edge (U), high-pressure laminate top/thermoplastic edge with MicrobeCare™ (A), or high-pressure laminate top/universal edge with MicrobeCare™ (C)

76	light brown walnut	+$0
8Q	folkstone grey	+$0
91	white	+$0
98	studio white	+$0
CL	cool grey neutral	+$0
HF	inner tone light	+$0
HM	natural maple	+$0
HP	light anigre	+$0
HX	aged cherry	+$0
LBA	clear on ash	+$0
LBB	oak on ash	+$0
LBC	walnut on ash	+$0
LBF	neutral twill	+$0
LBJ	graphite twill	+$0
LBQ	white twill	+$0
LBR	phantom ecru A	+$0
LBS	phantom cocoa A	+$0
LBU	medium matte walnut A	+$0
LBV	warm grey teak A	+$0
LT	light tone	+$0
LU	soft white	+$0
WL	sandstone	+$0
WN	warm grey neutral	+$0

Top/Edge Finish

For veneer top/veneer edge (W)

2U	light brown walnut A	+$200
40	dark brown walnut A	+$200
CHD	noble cherry	+$200
ET	clear on ash A	+$0
EU	oak on ash A	+$0
EV	walnut on ash A	+$0
EW	medium matte walnut A	+$200
OK	white oak (nonstandard) A	+$200
UL	natural maple A	+$0
WHN	natural white oak	+$200

Step 9. Edge Finish

For high-pressure laminate top/thermoplastic edge (L) or high-pressure laminate top/thermoplastic edge with MicrobeCare™ (A)

76	light brown walnut	+$0
8Q	folkstone grey	+$0
91	white	+$0
98	studio white	+$0
BU	black umber	+$0
CL	cool grey neutral	+$0
HF	inner tone light	+$0
HM	natural maple	+$0
HP	light anigre	+$0
HX	aged cherry	+$0
LBA	clear on ash	+$0
LBB	oak on ash	+$0
LBC	walnut on ash	+$0
LBF	neutral twill	+$0
LBJ	graphite twill	+$0
LBQ	white twill	+$0
LBR	phantom ecru	+$0
LBS	phantom cocoa	+$0
LBU	medium matte walnut	+$0
LBV	warm grey teak	+$0
LU	soft white	+$0
WL	sandstone	+$0

For high-pressure laminate/universal edge (U) or high-pressure laminate top/universal edge with MicrobeCare™ (C)

PLY	plywood edge	+$50

Step 10. Base Finish

Metallic Paint

CN	metallic champagne	+$0
MS	metallic silver	+$0
SNA	satin aluminum	+$135
SNB	satin bronze	+$135
SNC	satin carbon	+$135

OE1 One-Piece Seated Communal Table, Single Sided

continued

Sand Texture Paint		
8Q	folkstone grey	+$0
91	white	+$0
98	studio white	+$0
BK	black	+$0
G1	graphite	+$0
WL	sandstone	+$0
DB3	glacier	+$125
DN2	nightfall	+$125
DR1	canyon	+$125
OLF	olive	+$125

OE1 Two-Piece Standing Communal Table, Single Sided

HZ410S

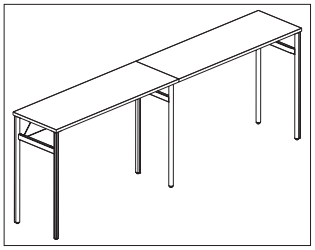

Product Information

Description

This OE1 Workspace Collection™ 2-piece, standing-height, single-sided Communal Table has a laminate top with thermoplastic edge, laminate top with thermoplastic-backed plywood edge, or veneer top and edge. Available with cutouts to accommodate Herman Miller power options that are ordered separately.

Notes

Cutouts for single-sided Communal Table are for rectangular Logic Mini units only.

Counterweights must be specified when using screens with this table. See OE1 planning guide for more information.

Dimensions

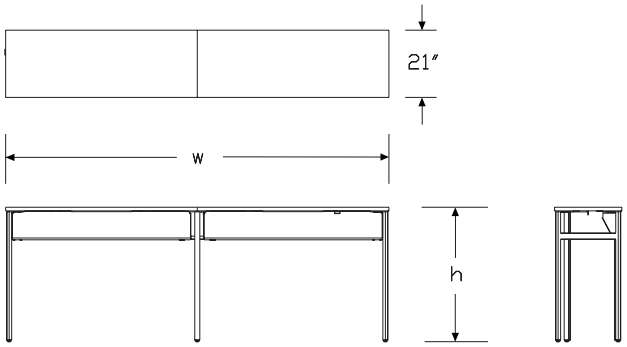

Specification Information

Step 1.

HZ410

Step 2. Edge

S. squared-edge

Step 3. Height

36 36″ high (counter height)
42 42″ high (bar height)

Step 4. Depth

21 21″ deep

Step 5. Width

120 120″ wide
144 144″ wide
192 192″ wide

Step 6. Surface Material

L high-pressure laminate top/thermoplastic edge
U high-pressure laminate/universal edge
W veneer top/veneer edge [A]
A high-pressure laminate top/thermoplastic edge with MicrobeCare™ [A]
C high-pressure laminate top/universal edge with MicrobeCare™ [A]

Prices for Steps 1-6.

	120L	120U	120W	120A	120C	144L
HZ410S. 36 21	$6919	6919	8439	7112	7112	7178
42 21	$6143	6143	7495	6336	6336	6401

	144U	144W	144A	144C	192L	192U
HZ410S. 36 21	$7178	8757	7372	7372	7437	7437
42 21	$6401	7809	6595	6595	6661	6661

	192W	192A	192C
HZ410S. 36 21	$9073	7630	7630
42 21	$8125	6854	6854

OE1 Two-Piece Standing Communal Table, Single Sided

continued

Step 7. Power Access Cutout

For 120" wide (120) or 144" wide (144)

N	no cutouts	+$0
2	two cutouts for Logic Mini Vine (rectangle) - Y1415 & Y1412	+$130
4	four cutouts for Logic Mini Vine (rectangle) - Y1415 & Y1412 (2 cutouts in each surface)	+$260

For 192" wide (192)

N	no cutouts	+$0
4	four cutouts for Logic Mini Vine (rectangle) - Y1415 & Y1412 (2 cutouts in each surface)	+$260

Step 8. Counterweight

For 120" wide (120)

F	for use with fabric screen	+$0
M	for use with metal modesty screen	+$160
N	no screen	+$0

For 144" wide (144)

F	for use with fabric screen	+$160
M	for use with metal modesty screen	+$320
N	no screen	+$0

For 192" wide (192)

F	for use with fabric screen	+$320
M	for use with metal modesty screen	+$480
N	no screen	+$0

Step 9.

Top Finish

For high-pressure laminate top/thermoplastic edge (L), high-pressure laminate/universal edge (U), high-pressure laminate top/thermoplastic edge with MicrobeCare™ (A), or high-pressure laminate top/universal edge with MicrobeCare™ (C)

76	light brown walnut	+$0
8Q	folkstone grey	+$0
91	white	+$0
98	studio white	+$0
CL	cool grey neutral	+$0
HF	inner tone light	+$0
HM	natural maple	+$0
HP	light anigre	+$0
HX	aged cherry	+$0
LBA	clear on ash	+$0
LBB	oak on ash	+$0
LBC	walnut on ash	+$0
LBF	neutral twill	+$0
LBJ	graphite twill	+$0
LBQ	white twill	+$0
LBR	phantom ecru A	+$0
LBS	phantom cocoa A	+$0
LBU	medium matte walnut A	+$0
LBV	warm grey teak A	+$0
LT	light tone	+$0
LU	soft white	+$0
WL	sandstone	+$0
WN	warm grey neutral	+$0

Top/Edge Finish

For veneer top/veneer edge (W)

2U	light brown walnut A	+$200
40	dark brown walnut A	+$200
CHD	noble cherry	+$200
ET	clear on ash A	+$0
EU	oak on ash A	+$0
EV	walnut on ash A	+$0
EW	medium matte walnut A	+$200
OK	white oak (nonstandard) A	+$200
UL	natural maple A	+$0
WHN	natural white oak	+$200

OE1 Two-Piece Standing Communal Table, Single Sided

continued

Step 10. Edge Finish

For high-pressure laminate top/thermoplastic edge (L) or high-pressure laminate top/thermoplastic edge with MicrobeCare™ (A)

76	light brown walnut	+$0
8Q	folkstone grey	+$0
91	white	+$0
98	studio white	+$0
BU	black umber	+$0
CL	cool grey neutral	+$0
HF	inner tone light	+$0
HM	natural maple	+$0
HP	light anigre	+$0
HX	aged cherry	+$0
LBA	clear on ash	+$0
LBB	oak on ash	+$0
LBC	walnut on ash	+$0
LBF	neutral twill	+$0
LBJ	graphite twill	+$0
LBQ	white twill	+$0
LBR	phantom ecru	+$0
LBS	phantom cocoa	+$0
LBU	medium matte walnut	+$0
LBV	warm grey teak	+$0
LU	soft white	+$0
WL	sandstone	+$0

For high-pressure laminate/universal edge (U) or high-pressure laminate top/universal edge with MicrobeCare™ (C)

PLY	plywood edge	+$50

Step 11. Base Finish

Metallic Paint

CN	metallic champagne	+$0
MS	metallic silver	+$0
SNA	satin aluminum	+$135
SNB	satin bronze	+$135
SNC	satin carbon	+$135

Sand Texture Paint

8Q	folkstone grey	+$0
91	white	+$0
98	studio white	+$0
BK	black	+$0
G1	graphite	+$0
WL	sandstone	+$0
DB3	glacier	+$125
DN2	nightfall	+$125
DR1	canyon	+$125
OLF	olive	+$125

OE1 Communal Table Metal Screen, Surface Attached with Modesty HZ420.

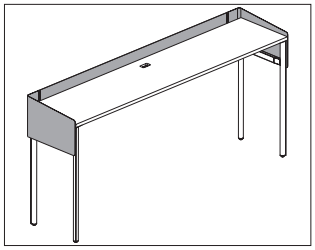

Product Information

Description

This metal screen attaches to the surface of a single-sided OE1 Workspace Collection™ Communal Table. It provides boundary above and modesty below the surface. Attachment hardware included.

Notes

Screen extends 3″ above and 10″ below the surface.

Dimensions

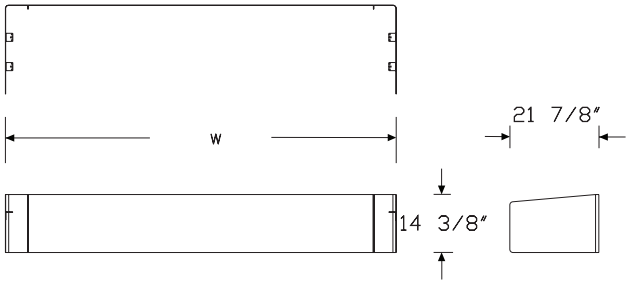

Specification Information

Step 1.

HZ420.

Step 2. Height

3	3″ above surface/10″ below surface

Step 3. Communal Table Width

60	60″ wide (for use with 1 piece work bar)
72	72″ wide (for use with 1 piece work bar)
96	96″ wide (for use with 1 piece work bar)
120	120″ wide (for use with 2 piece work bar)
144	144″ wide (for use with 2 piece work bar)
192	192″ wide (for use with 2 piece work bar)

Prices for Steps 1-3.

	60	72	96	120	144	192
HZ420. 3	$908	1103	1296	1555	1749	1942

Step 4. Screen Finish

Metallic Paint

For 120" wide (for use with 2 piece work bar) (120), 144" wide (for use with 2 piece work bar) (144), or 192" wide (for use with 2 piece work bar) (192)

CN	metallic champagne	+$0
MS	metallic silver	+$0
SNA	satin aluminum	+$135
SNB	satin bronze	+$135
SNC	satin carbon	+$135

Sand Texture Paint

For 120" wide (for use with 2 piece work bar) (120), 144" wide (for use with 2 piece work bar) (144), or 192" wide (for use with 2 piece work bar) (192)

8Q	folkstone grey	+$0
91	white	+$0
98	studio white	+$0
BK	black	+$0
DB3	glacier	+$125
DN2	nightfall	+$125
DR1	canyon	+$125
OLF	olive	+$125

OE1 Communal Table Metal Screen, Surface Attached with Modesty *continued*

Metallic Paint

For 60" wide (for use with 1 piece work bar) (60), 72" wide (for use with 1 piece work bar) (72), or 96" wide (for use with 1 piece work bar) (96)

CN	metallic champagne	+$0
MS	metallic silver	+$0
SNA	satin aluminum	+$60
SNB	satin bronze	+$60
SNC	satin carbon	+$60

Sand Texture Paint

For 60" wide (for use with 1 piece work bar) (60), 72" wide (for use with 1 piece work bar) (72), or 96" wide (for use with 1 piece work bar) (96)

8Q	folkstone grey	+$0
91	white	+$0
98	studio white	+$0
BK	black	+$0
DB3	glacier	+$50
DN2	nightfall	+$50
DR1	canyon	+$50
OLF	olive	+$50

OE1 Communal Table Flat Edge Screen, Surface Attached with Modesty

HZ430.

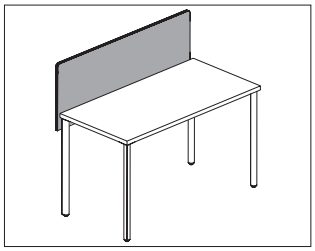

Product Information

Description

This tackable fabric screen attaches to the surface of an OE1 Workspace Collection™ Communal Table. It provides boundary above and modesty below the surface. Attachment hardware included.

Notes

Screen accepts Customer's Own Material (COM). Yardage is estimated for nondirectional, 54" wide fabrics.
For vertical fabric direction (T, E):
Width—Yardage
48—1.70
For horizontal fabric direction (R, D):
Width—Yardage
48—1.76
60—2.08
72—2.46
For information on multiple quantities or directional fabrics, contact COM Department. See Order Information in appendices.

Dimensions

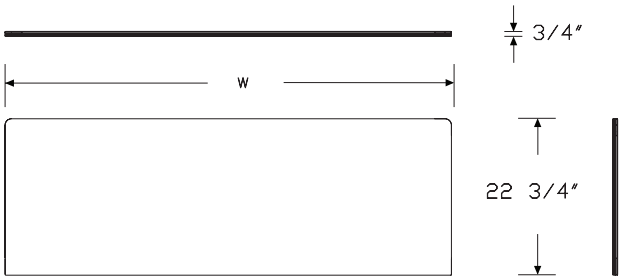

Specification Information

Step 1.

HZ430.

Step 2. Attachment

W communal table surface attached

Step 3. Height

14 14" above surface/ 9" below surface

Step 4. Width

48 48" wide
60 60" wide
72 72" wide

Step 5. Surface Material

For 48" wide (48)

T tackable fabric
R tackable fabric, horizontal
D tackable fabric, horizontal with MicrobeCare™
E tackable fabric with MicrobeCare™

For 60" wide (60) or 72" wide (72)

R tackable fabric, horizontal
D tackable fabric, horizontal with MicrobeCare™

Prices for Steps 1-5.

	48T	48R	48D	48E	60R	60D
HZ430. W 14	$844	844	923	923	972	1053

	72R	72D
HZ430. W 14	$1183	1262

Step 6. Bracket Finish

G2 graphite satin +$0

OE1 Communal Table Flat Edge Screen, Surface Attached with Modesty *continued*

Step 7. Fabric	
For 48" wide (48)	
Price Category 1	+$0
Price Category 2	+$48
Price Category 3	+$118
Price Category 4	+$209
Price Category 5	+$355
Price Category B	+$373
Price Category C	+$506
Price Category E	+$764
For 60" wide (60)	
Price Category 1	+$0
Price Category 2	+$60
Price Category 3	+$144
Price Category 4	+$256
Price Category 5	+$436
Price Category B	+$457
Price Category C	+$619
Price Category E	+$935
For 72" wide (72)	
Price Category 1	+$0
Price Category 2	+$70
Price Category 3	+$169
Price Category 4	+$301
Price Category 5	+$514
Price Category B	+$539
Price Category C	+$730
Price Category E	+$1103

OE1 Communal Table Pari Screen, Surface Attached with Modesty

HZ440.

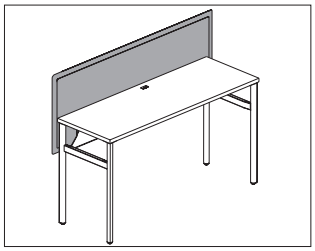

Product Information

Description

This tackable Pari fabric screen attaches to the surface of an OE1 Workspace Collection™ Communal Table. It provides boundary above and modesty below the surface. Attachment hardware included.

Notes

Screen accepts Customer's Own Material (COM). Yardage is estimated for nondirectional, 54″ wide fabrics.
For vertical fabric direction (T, E):
Width—Yardage
48—1.70
For horizontal fabric direction (R, D):
Width—Yardage
48—1.76
60—2.08
72—2.46
For information on multiple quantities or directional fabrics, contact COM Department. See Order Information in appendices.

Dimensions

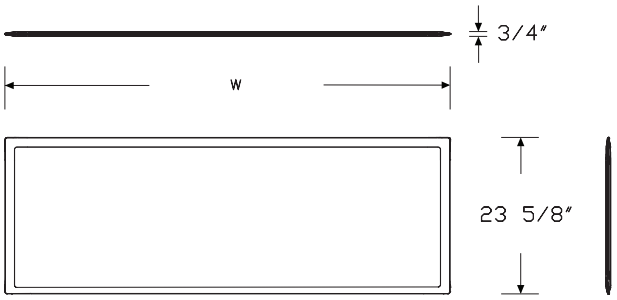

Specification Information

Step 1.

HZ440.

Step 2. Attachment

W communal table surface attached

Step 3. Height

14 14″ above surface/ 9″ below surface

Step 4. Width

48 48″ wide
60 60″ wide
72 72″ wide

Step 5. Surface Material

For 48″ wide (48)

T tackable fabric
R tackable fabric, horizontal
D tackable fabric, horizontal with MicrobeCare™
E tackable fabric with MicrobeCare™

For 60″ wide (60) or 72″ wide (72)

R tackable fabric, horizontal
D tackable fabric, horizontal with MicrobeCare™

Prices for Steps 1-5.

	48T	48R	48D	48E	60R	60D
HZ440. W 14	$1166	1166	1247	1247	1361	1441

	72R	72D
HZ440. W 14	$1501	1582

Step 6. Bracket Finish

G2 graphite satin +$0

OE1 Communal Table Pari Screen, Surface Attached with Modesty *continued*

Step 7. Fabric	
For 48" wide (48)	
Price Category 1	+$0
Price Category 2	+$48
Price Category 3	+$118
Price Category 4	+$209
Price Category 5	+$355
Price Category B	+$373
Price Category C	+$506
Price Category E	+$764
For 60" wide (60)	
Price Category 1	+$0
Price Category 2	+$60
Price Category 3	+$144
Price Category 4	+$256
Price Category 5	+$436
Price Category B	+$457
Price Category C	+$619
Price Category E	+$935
For 72" wide (72)	
Price Category 1	+$0
Price Category 2	+$70
Price Category 3	+$169
Price Category 4	+$301
Price Category B	+$539
Price Category C	+$730
Price Category E	+$1103

OE1 One-Piece Standing Communal Table, Double Sided HZ450S

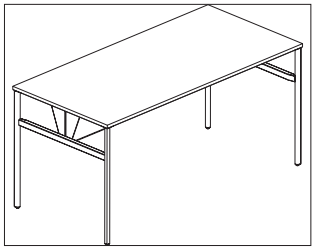

Product Information

Description

This OE1 Workspace Collection™ standing-height, double-sided Communal Table has a laminate top with thermoplastic edge, laminate top with thermoplastic-backed plywood edge, or veneer top and edge. Available with cutouts to accommodate Herman Miller power options that are ordered separately.

Dimensions

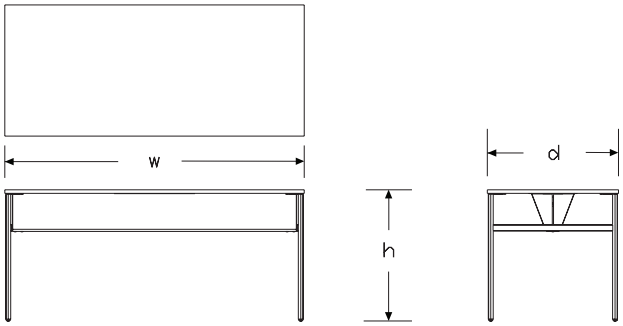

Specification Information

Step 1.

HZ450

Step 2. Edge

S. squared-edge

Step 3. Height

36 36″ high (counter height)
42 42″ high (bar height)

Step 4. Depth

30 30″ deep
42 42″ deep

Step 5. Width

60 60″ wide
72 72″ wide
96 96″ wide

Step 6. Surface Material

L high-pressure laminate top/thermoplastic edge
U high-pressure laminate/universal edge
W veneer top/veneer edge A
A high-pressure laminate top/thermoplastic edge with MicrobeCare™ A
C high-pressure laminate top/universal edge with MicrobeCare™ A

Prices for Steps 1-6.

	60L	60U	60W	60A	60C	72L
HZ450S. 36 30	$4319	4319	5614	4416	4416	4578
42	$4835	4835	6287	4934	4934	5095
42 30	$3833	3833	4983	3930	3930	4092
42	$4350	4350	5656	4448	4448	4609

	72U	72W	72A	72C	96L	96U
HZ450S. 36 30	$4578	5950	4675	4675	4835	4835
42	$5095	6623	5192	5192	5354	5354
42 30	$4092	5319	4189	4189	4376	4376
42	$4609	5992	4706	4706	4901	4376

	96W	96A	96C
HZ450S. 36 30	$6287	4946	4946
42	$6960	5463	5463
42 30	$5689	4487	4487
42	$6372	5011	5011

Step 7. Power Access Cutout

For 30" deep (30) with 60" wide (60)

NC	no cutout	+$0
C1	one center cutout for Logic Mini (rectangle) -	+$65
C2	one center cutout for Logic Mini (square) -	+$65

For 42" deep (42) with 60" wide (60)

NC	no cutout	+$0
C1	one center cutout for Logic Mini (rectangle) -	+$65
C2	one center cutout for Logic Mini (square) -	+$65
L3	one center cutout for logic Y1425 3 port	+$65
L5	one center cutout for logic Y1425 5 port	+$65
L6	one center cutout for logic Y1425 6 port	+$65
TB	one center cutout for technology bucket	+$190

For 30" deep (30) with 72" wide (72), or 96" wide (96)

NC	no cutout	+$0
C3	two cutouts for logic mini (rectangle) -	+$130
C4	two cutouts for logic mini (square) -	+$130

For 42" deep (42) with 72" wide (72), or 96" wide (96)

NC	no cutout	+$0
C3	two cutouts for logic mini (rectangle) -	+$130
C4	two cutouts for logic mini (square) -	+$130
L3	one center cutout for logic Y1425 3 port	+$65
L5	one center cutout for logic Y1425 5 port	+$65
L6	one center cutout for logic Y1425 6 port	+$65
TB	one center cutout for technology bucket	+$190

Step 8.

Top Finish

For high-pressure laminate top/thermoplastic edge (L), high-pressure laminate/universal edge (U), high-pressure laminate top/thermoplastic edge with MicrobeCare™ (A), or high-pressure laminate top/universal edge with MicrobeCare™ (C)

76	light brown walnut	+$0
8Q	folkstone grey	+$0
91	white	+$0
98	studio white	+$0
CL	cool grey neutral	+$0
HF	inner tone light	+$0
HM	natural maple	+$0
HP	light anigre	+$0
HX	aged cherry	+$0
LBA	clear on ash	+$0
LBB	oak on ash	+$0
LBC	walnut on ash	+$0
LBF	neutral twill	+$0
LBJ	graphite twill	+$0
LBQ	white twill	+$0
LBR	phantom ecru A	+$0
LBS	phantom cocoa A	+$0
LBU	medium matte walnut A	+$0
LBV	warm grey teak A	+$0
LT	light tone	+$0
LU	soft white	+$0
WL	sandstone	+$0
WN	warm grey neutral	+$0

Top/Edge Finish

For veneer top/veneer edge (W)

2U	light brown walnut A	+$200
40	dark brown walnut A	+$200
CHD	noble cherry	+$200
ET	clear on ash A	+$0
EU	oak on ash A	+$0
EV	walnut on ash A	+$0
EW	medium matte walnut A	+$200
OK	white oak (nonstandard) A	+$200
UL	natural maple A	+$0
WHN	natural white oak	+$200

Step 9. Edge Finish

For high-pressure laminate top/thermoplastic edge (L) or high-pressure laminate top/thermoplastic edge with MicrobeCare™ (A)

76	light brown walnut	+$0
8Q	folkstone grey	+$0
91	white	+$0
98	studio white	+$0
BU	black umber	+$0
CL	cool grey neutral	+$0
HF	inner tone light	+$0
HM	natural maple	+$0
HP	light anigre	+$0
HX	aged cherry	+$0
LBA	clear on ash	+$0
LBB	oak on ash	+$0
LBC	walnut on ash	+$0
LBF	neutral twill	+$0
LBJ	graphite twill	+$0
LBQ	white twill	+$0
LBR	phantom ecru	+$0
LBS	phantom cocoa	+$0
LBU	medium matte walnut	+$0
LBV	warm grey teak	+$0
LU	soft white	+$0
WL	sandstone	+$0

For high-pressure laminate/universal edge (U) or high-pressure laminate top/universal edge with MicrobeCare™ (C)

PLY	plywood edge	+$50

Step 10. Base Finish

Metallic Paint

CN	metallic champagne	+$0
MS	metallic silver	+$0
SNA	satin aluminum	+$135
SNB	satin bronze	+$135
SNC	satin carbon	+$135

Sand Texture Paint

8Q	folkstone grey	+$0
91	white	+$0
98	studio white	+$0
BK	black	+$0
G1	graphite	+$0
WL	sandstone	+$0
DB3	glacier	+$125
DN2	nightfall	+$125
DR1	canyon	+$125
OLF	olive	+$125

Step 11. Base Type

For 30" deep (30)

G	glides	+$0

For 42" deep (42)

C	casters	+$40
G	glides	+$0

OE1 Leg Cable Manager for Communal Tables HZ480.

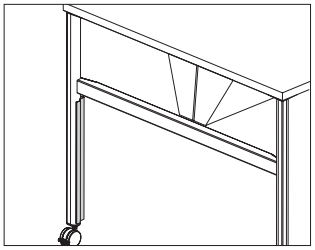

Product Information

Description

This cable manager routes cables from the underside of a standing height or counter height OE1 Workspace Collection™ table down to the floor. The kit includes the cable manager and a cord bracket that attaches to the leg plate.

Notes

Cable manager can hold 2 cords.

Cable manager can be used on standing-height and counter-height OE1 Communal Tables. See OE1 planning guide for application information.

Dimensions

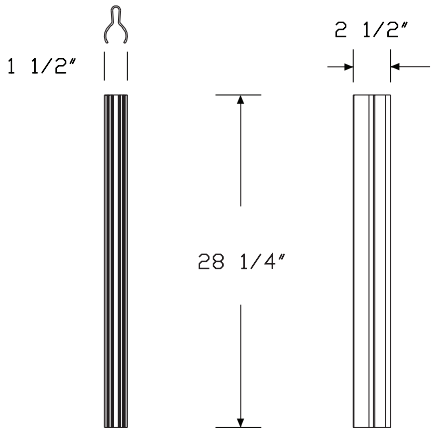

Specification Information

Step 1.

HZ480.

Step 2. Cable Manager Height

28	28″ high	

Prices for Steps 1-2.

HZ480. 28		$117

Step 3. Finish

8Q	folkstone grey	+$0
BK	black	+$0
DB3	glacier	+$20
DN2	nightfall	+$20
DR1	canyon	+$20
OLF	olive	+$20

OE1 Three-Piece Standing Communal Table, Double Sided — HZ470S

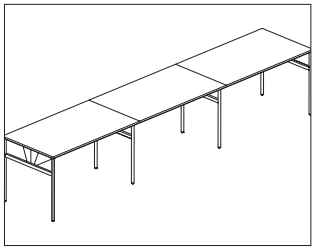

Product Information

Description

This OE1 Workspace Collection™ 3-piece, standing-height, double-sided Communal Table has a laminate top with thermoplastic edge, laminate top with thermoplastic-backed plywood edge, or veneer top and edge. Available with cutouts to accommodate Herman Miller power options that are ordered separately.

Dimensions

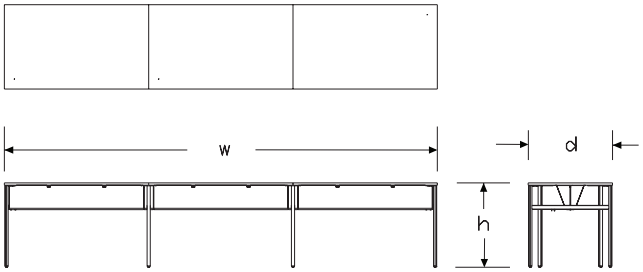

Specification Information

Step 1.

HZ470

Step 2. Edge

S. squared-edge

Step 3. Height

36 36″ high (counter height)
42 42″ high (bar height)

Step 4. Depth

30 30″ deep
42 42″ deep

Step 5. Width

180 180″ wide
216 216″ wide

Step 6. Surface Material

L high-pressure laminate top/thermoplastic edge
U high-pressure laminate/universal edge
W veneer top/veneer edge [A]
A high-pressure laminate top/thermoplastic edge with MicrobeCare™ [A]
C high-pressure laminate top/universal edge with MicrobeCare™ [A]

Prices for Steps 1-6.

		180L	180U	180W	180A	180C	216L
HZ470S. 36	**30**	$11845	11845	15397	12135	12135	12621
	42	$12363	12363	16070	12654	12654	13140
42	**30**	$10626	10626	13813	10917	10917	11402
	42	$11144	11144	14484	11434	11434	11920

		216U	216W	216A	216C
HZ470S. 36	**30**	$12621	16408	12912	12912
	42	$13140	17080	13429	13429
42	**30**	$11402	14822	11694	11694
	42	$11920	15495	12212	12212

Step 7. Power Access Cutout

For 30″ deep (30) with 180″ wide (180)

NC	no cutout	+$0
C1	three center cutouts for logic mini (rectangle) -	+$195
C2	three center cutouts for logic mini (square) -	+$195

OE1 Three-Piece Standing Communal Table, Double Sided

continued

For 42" deep (42) with 180" wide (180)

NC	no cutout	+$0
C1	three center cutouts for logic mini (rectangle) -	+$195
C2	three center cutouts for logic mini (square) -	+$195
L3	three center cutout for logic Y1425 3 port (1 centered cutout in each surface)	+$195
L5	three center cutout for logic Y1425 5 port (1 centered cutout in each surface)	+$195
L6	three center cutout for logic Y1425 6 port (1 centered cutout in each surface)	+$195
TB	three center cutout for technology bucket (1 centered cutout in each surface)	+$570
LS	three cutouts for left logic Y1425 5 port, center technology bucket, right logic Y1425 5 port	+$320

For 30" deep (30) with 216" wide (216)

NC	no cutout	+$0
C3	six cutouts for logic mini (rectangle) -	+$390
C4	six cutouts for logic mini (square) -	+$390

For 42" deep (42) with 216" wide (216)

NC	no cutout	+$0
C3	six cutouts for logic mini (rectangle) -	+$390
C4	six cutouts for logic mini (square) -	+$390
L3	three center cutout for logic Y1425 3 port (1 centered cutout in each surface)	+$195
L5	three center cutout for logic Y1425 5 port (1 centered cutout in each surface)	+$195
L6	three center cutout for logic Y1425 6 port (1 centered cutout in each surface)	+$195
TB	three center cutout for technology bucket (1 centered cutout in each surface)	+$570
LT	three cutouts for left logic Y1425 6 port, center techology bucket, right logic Y1425 6 port	+$320

Step 8.

Top Finish

For high-pressure laminate top/thermoplastic edge (L), high-pressure laminate/universal edge (U), high-pressure laminate top/thermoplastic edge with MicrobeCare™ (A), or high-pressure laminate top/universal edge with MicrobeCare™ (C)

76	light brown walnut	+$0
8Q	folkstone grey	+$0
91	white	+$0
98	studio white	+$0
CL	cool grey neutral	+$0
HF	inner tone light	+$0
HM	natural maple	+$0
HP	light anigre	+$0
HX	aged cherry	+$0
LBA	clear on ash	+$0
LBB	oak on ash	+$0
LBC	walnut on ash	+$0
LBF	neutral twill	+$0
LBJ	graphite twill	+$0
LBQ	white twill	+$0
LBR	phantom ecru A	+$0
LBS	phantom cocoa A	+$0
LBU	medium matte walnut A	+$0
LBV	warm grey teak A	+$0
LT	light tone	+$0
LU	soft white	+$0
WL	sandstone	+$0
WN	warm grey neutral	+$0

Top/Edge Finish

For veneer top/veneer edge (W)

2U	light brown walnut A	+$200
40	dark brown walnut A	+$200
CHD	noble cherry	+$200
ET	clear on ash A	+$0
EU	oak on ash A	+$0
EV	walnut on ash A	+$0
EW	medium matte walnut A	+$200
OK	white oak (nonstandard) A	+$200
UL	natural maple A	+$0
WHN	natural white oak	+$200

OE1 Three-Piece Standing Communal Table, Double Sided

continued

Step 9. Edge Finish

For high-pressure laminate top/thermoplastic edge (L) or high-pressure laminate top/thermoplastic edge with MicrobeCare™ (A)

76	light brown walnut	+$0
8Q	folkstone grey	+$0
91	white	+$0
98	studio white	+$0
BU	black umber	+$0
CL	cool grey neutral	+$0
HF	inner tone light	+$0
HM	natural maple	+$0
HP	light anigre	+$0
HX	aged cherry	+$0
LBA	clear on ash	+$0
LBB	oak on ash	+$0
LBC	walnut on ash	+$0
LBF	neutral twill	+$0
LBJ	graphite twill	+$0
LBQ	white twill	+$0
LBR	phantom ecru	+$0
LBS	phantom cocoa	+$0
LBU	medium matte walnut	+$0
LBV	warm grey teak	+$0
LU	soft white	+$0
WL	sandstone	+$0

For high-pressure laminate/universal edge (U) or high-pressure laminate top/universal edge with MicrobeCare™ (C)

PLY	plywood edge	+$50

Step 10. Base Finish

Metallic Paint

CN	metallic champagne	+$0
MS	metallic silver	+$0
SNA	satin aluminum	+$260
SNB	satin bronze	+$260
SNC	satin carbon	+$260

Sand Texture Paint

8Q	folkstone grey	+$0
91	white	+$0
98	studio white	+$0
BK	black	+$0
G1	graphite	+$0
WL	sandstone	+$0
DB3	glacier	+$250
DN2	nightfall	+$250
DR1	canyon	+$250
OLF	olive	+$250

OE1 Two-Piece Standing Communal Table, Double Sided — HZ460S

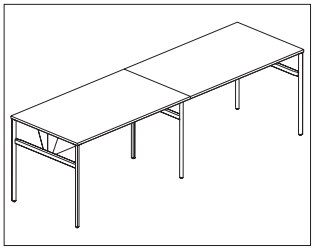

Product Information

Description

This OE1 Workspace Collection™ standing-height, double-sided Communal Table has a laminate top with thermoplastic edge, laminate top with thermoplastic-backed plywood edge, or veneer top and edge. Available with cutouts to accommodate Herman Miller power options that are ordered separately.

Dimensions

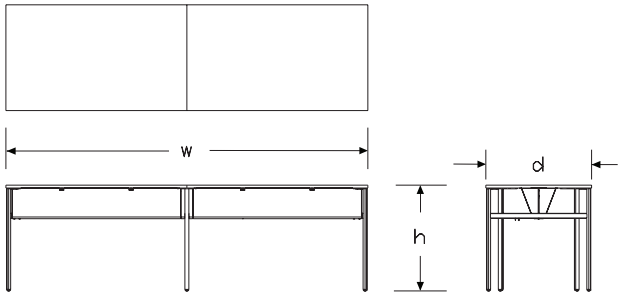

Specification Information

Step 1.

HZ460

Step 2. Edge

S. squared-edge

Step 3. Height

36 36″ high (counter height)
42 42″ high (bar height)

Step 4. Depth

30 30″ deep
42 42″ deep

Step 5. Width

120 120″ wide
144 144″ wide
192 192″ wide

Step 6. Surface Material

L high-pressure laminate top/thermoplastic edge
U high-pressure laminate/universal edge
W veneer top/veneer edge A
A high-pressure laminate top/thermoplastic edge with MicrobeCare™ A
C high-pressure laminate top/universal edge with MicrobeCare™ A

Prices for Steps 1-6.

			120L	120U	120W	120A	120C	144L
HZ460S.	36	30	$8544	8544	11106	8739	8739	8673
		42	$9061	9061	11780	9256	9256	9192
	42	30	$7636	7636	9928	7831	7831	7764
		42	$8153	8153	10600	8348	8348	8282

			144U	144W	144A	144C	192L	192U
HZ460S.	36	30	$8673	11275	8868	8868	9192	9192
		42	$9192	11948	9386	9386	9708	9708
	42	30	$7764	10095	7960	7960	8282	8282
		42	$8282	10768	8478	8478	8800	8800

			192W	192A	192C
HZ460S.	36	30	$11948	9411	9411
		42	$12621	9930	9930
	42	30	$10768	8503	8503
		42	$11441	9020	9020

OE1 Two-Piece Standing Communal Table, Double Sided

continued

Step 7. Power Access Cutout

For 30" deep (30) with 120" wide (120)

NC	no cutout	+$0
C5	two cutouts for logic mini (rectangle) -	+$130
C6	two cutouts for logic mini (square) -	+$130

For 42" deep (42) with 120" wide (120)

NC	no cutout	+$0
C5	two cutouts for logic mini (rectangle) -	+$130
C6	two cutouts for logic mini (square) -	+$130
L3	two cutouts for logic Y1425 3 port (1 centered cutout in each surface)	+$130
L5	two cutouts for logic Y1425 5 port (1 centered cutout in each surface)	+$130
L6	two cutouts for logic Y1425 6 port (1 centered cutout in each surface)	+$130
TB	two cutouts for technology bucket (1 centered cutout in each surface)	+$380

For 30" deep (30) with 144" wide (144), or 192" wide (192)

NC	no cutout	+$0
C7	four cutouts for logic mini (rectangle) -	+$260
C8	four cutouts for logic mini (square) -	+$260

For 42" deep (42) with 144" wide (144), or 192" wide (192)

NC	no cutout	+$0
C7	four cutouts for logic mini (rectangle) -	+$260
C8	four cutouts for logic mini (square) -	+$260
L3	two cutouts for logic Y1425 3 port (1 centered cutout in each surface)	+$130
L5	two cutouts for logic Y1425 5 port (1 centered cutout in each surface)	+$130
L6	two cutouts for logic Y1425 6 port (1 centered cutout in each surface)	+$130
TB	two cutouts for technology bucket (1 centered cutout in each surface)	+$380

Step 8.

Top Finish

For high-pressure laminate top/thermoplastic edge (L), high-pressure laminate/universal edge (U), high-pressure laminate top/thermoplastic edge with MicrobeCare™ (A), or high-pressure laminate top/universal edge with MicrobeCare™ (C)

76	light brown walnut	+$0
8Q	folkstone grey	+$0
91	white	+$0
98	studio white	+$0
CL	cool grey neutral	+$0
HF	inner tone light	+$0
HM	natural maple	+$0
HP	light anigre	+$0
HX	aged cherry	+$0
LBA	clear on ash	+$0
LBB	oak on ash	+$0
LBC	walnut on ash	+$0
LBF	neutral twill	+$0
LBJ	graphite twill	+$0
LBQ	white twill	+$0
LBR	phantom ecru A	+$0
LBS	phantom cocoa A	+$0
LBU	medium matte walnut A	+$0
LBV	warm grey teak A	+$0
LT	light tone	+$0
LU	soft white	+$0
WL	sandstone	+$0
WN	warm grey neutral	+$0

Top/Edge Finish

For veneer top/veneer edge (W)

2U	light brown walnut A	+$200
40	dark brown walnut A	+$200
CHD	noble cherry	+$200
ET	clear on ash A	+$0
EU	oak on ash A	+$0
EV	walnut on ash A	+$0
EW	medium matte walnut A	+$200
OK	white oak (nonstandard) A	+$200
UL	natural maple A	+$0
WHN	natural white oak	+$200

OE1 Two-Piece Standing Communal Table, Double Sided

continued

Step 9. Edge Finish

For high-pressure laminate top/thermoplastic edge (L) or high-pressure laminate top/thermoplastic edge with MicrobeCare™ (A)

76	light brown walnut	+$0
8Q	folkstone grey	+$0
91	white	+$0
98	studio white	+$0
BU	black umber	+$0
CL	cool grey neutral	+$0
HF	inner tone light	+$0
HM	natural maple	+$0
HP	light anigre	+$0
HX	aged cherry	+$0
LBA	clear on ash	+$0
LBB	oak on ash	+$0
LBC	walnut on ash	+$0
LBF	neutral twill	+$0
LBJ	graphite twill	+$0
LBQ	white twill	+$0
LBR	phantom ecru	+$0
LBS	phantom cocoa	+$0
LBU	medium matte walnut	+$0
LBV	warm grey teak	+$0
LU	soft white	+$0
WL	sandstone	+$0

For high-pressure laminate/universal edge (U) or high-pressure laminate top/universal edge with MicrobeCare™ (C)

PLY	plywood edge	+$50

Step 10. Base Finish

Metallic Paint

CN	metallic champagne	+$0
MS	metallic silver	+$0
SNA	satin aluminum	+$185
SNB	satin bronze	+$185
SNC	satin carbon	+$185

Sand Texture Paint

8Q	folkstone grey	+$0
91	white	+$0
98	studio white	+$0
BK	black	+$0
G1	graphite	+$0
WL	sandstone	+$0
DB3	glacier	+$175
DN2	nightfall	+$175
DR1	canyon	+$175
OLF	olive	+$175

OE1 Teardrop Leg HZ500.

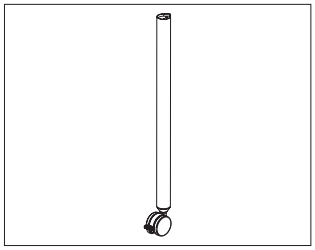

Product Information

Description

This single leg supports 1 corner of a surface. It can be specified with a glide or locking caster. Attachment hardware included. Package contains 1 leg.

Dimensions

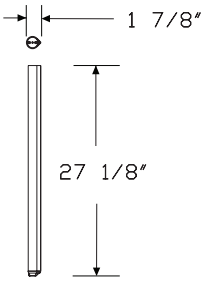

Specification Information

Step 1.

HZ500.	$192

Step 2. Leg Finish

Metallic Paint

CN	metallic champagne	+$0
MS	metallic silver	+$0
SNA	satin aluminum	+$35
SNB	satin bronze	+$35
SNC	satin carbon	+$35

Sand Texture Paint

8Q	folkstone grey	+$0
91	white	+$0
98	studio white	+$0
BK	black	+$0
G1	graphite	+$0
WL	sandstone	+$0
DB3	glacier	+$30
DN2	nightfall	+$30
DR1	canyon	+$30
OLF	olive	+$30

Step 3. Base Type

C	casters	+$0
G	glides	+$0

OE1 Worksurface, Rectangle HZ505S

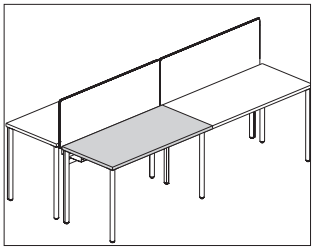

Product Information

Description

This surface attaches to OE1 Workspace Collection™ Teardrop Legs to create a freestanding rectangular table or can be ganged together to create a bench. It has a laminate top with thermoplastic edge, laminate top with thermoplastic-backed plywood edge, or veneer top and edge. Laminate and veneer surfaces are 1¼″ thick.

Notes

MicrobeCare™ is an antimicrobial coating applied to the laminate or veneer surface of this product.

MicrobeCare protects products from mold, mildew, algae, and bacteria that cause deterioration, discoloration, odors, and stains.

MicrobeCare is registered with the US Environmental Protection Agency (EPA).

Stiffener (HZ510.) is required for any laminate or veneer surface 54″ wide or wider. See the OE1 planning guide for specific stiffener guidelines. Stiffener is ordered separately.

Dimensions

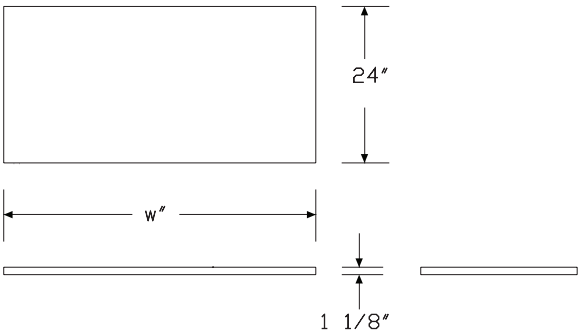

Specification Information

Step 1.

HZ505

Step 2. Edge

S. squared-edge

Step 3. Depth

18 18″ deep
24 24″ deep
30 30″ deep

Step 4. Width

For 18″ deep (18)

48 48″ wide
60 60″ wide
72 72″ wide

For 24″ deep (24) or 30″ deep (30)

36 36″ wide
42 42″ wide
48 48″ wide
54 54″ wide
60 60″ wide
66 66″ wide
72 72″ wide

Step 5. Surface Material

L high-pressure laminate top/thermoplastic edge
U high-pressure laminate/universal edge
W veneer top/veneer edge A
A high-pressure laminate top/thermoplastic edge with MicrobeCare™ A
C high-pressure laminate top/universal edge with MicrobeCare™ A

Prices for Steps 1-5.

		L	U	W	A	C
HZ505S. 18	**48**	$326	326	567	423	423
	60	$433	433	756	531	531
	72	$533	533	930	631	631

24	**36**	$326	326	567	410	410
	42	$382	382	664	466	466
	48	$435	435	762	532	532
	54	$510	510	892	608	608
	60	$589	589	1027	686	686
	66	$686	686	1195	783	783
	72	$790	790	1383	887	887
30	**36**	$368	368	643	453	453
	42	$425	425	746	509	509
	48	$489	489	856	586	586
	54	$564	564	984	661	661
	60	$645	645	1129	743	743
	66	$745	745	1303	842	842
	72	$852	852	1491	949	949

Step 6. Power Access Cutout

For 18" deep (18)

NC	no cutout	+$0

For 24" deep (24) or 30" deep (30) with 36" wide (36)

NC	no cutout	+$0

For 24" deep (24) or 30" deep (30) with 42" wide (42), 48" wide (48), 54" wide (54), or 60" wide (60), or 66" wide (66), or 72" wide (72)

NC	no cutout	+$0
RC	right cutout for Logic Mini - Y1414 and Y1412.1	+$65
LC	left cutout for Logic Mini - Y1414 and Y1412.1	+$65
CC	center cutout for Logic Mini - Y1414 and Y1412.1	+$65

Step 7.

Top Finish

For high-pressure laminate top/thermoplastic edge (L), high-pressure laminate/universal edge (U), high-pressure laminate top/thermoplastic edge with MicrobeCare™ (A), or high-pressure laminate top/universal edge with MicrobeCare™ (C)

76	light brown walnut	+$0
8Q	folkstone grey	+$0
91	white	+$0
98	studio white	+$0
CL	cool grey neutral	+$0
HF	inner tone light	+$0
HM	natural maple	+$0
HP	light anigre	+$0
HX	aged cherry	+$0
LBA	clear on ash	+$0
LBB	oak on ash	+$0
LBC	walnut on ash	+$0
LBF	neutral twill	+$0
LBJ	graphite twill	+$0
LBQ	white twill	+$0
LBR	phantom ecru A	+$0
LBS	phantom cocoa A	+$0
LBU	medium matte walnut A	+$0
LBV	warm grey teak A	+$0
LT	light tone	+$0
LU	soft white	+$0
WL	sandstone	+$0
WN	warm grey neutral	+$0

Top/Edge Finish

For veneer top/veneer edge (W)

2U	light brown walnut A	+$85
40	dark brown walnut A	+$85
CHD	noble cherry	+$85
ET	clear on ash A	+$85
EU	oak on ash A	+$85
EV	walnut on ash A	+$85
EW	medium matte walnut A	+$85
OK	white oak (nonstandard) A	+$85
OU	walnut	+$85
UL	natural maple A	+$85
WHN	natural white oak	+$85

OE1 Worksurface, Rectangle

continued

Step 8. Edge Finish

For high-pressure laminate top/thermoplastic edge (L) or high-pressure laminate top/thermoplastic edge with MicrobeCare™ (A)

76	light brown walnut	+$0
8Q	folkstone grey	+$0
91	white	+$0
98	studio white	+$0
BU	black umber	+$0
CL	cool grey neutral	+$0
HF	inner tone light	+$0
HM	natural maple	+$0
HP	light anigre	+$0
HX	aged cherry	+$0
LBA	clear on ash	+$0
LBB	oak on ash	+$0
LBC	walnut on ash	+$0
LBF	neutral twill	+$0
LBJ	graphite twill	+$0
LBQ	white twill	+$0
LBR	phantom ecru	+$0
LBS	phantom cocoa	+$0
LBU	medium matte walnut	+$0
LBV	warm grey teak	+$0
LU	soft white	+$0
WL	sandstone	+$0

For high-pressure laminate/universal edge (U) or high-pressure laminate top/universal edge with MicrobeCare™ (C)

PLY	plywood edge	+$50

OE1 Stiffener HZ510.

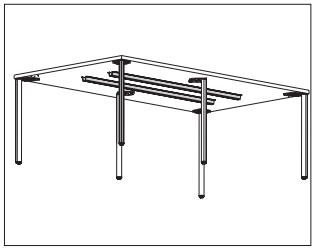

Product Information

Description

This stiffener adds additional stiffness to an OE1 Workspace Collection™ freestanding surface. Attachment hardware included.

Notes

Stiffener hangs below the surface and is 1¼″ high.

Stiffener is not used on surfaces less than 54″ wide.

Common stiffener applications include the following. See OE1 planning guide for more applications.

Stiffener Width—Leg Placement—Surface Width

39—2 legs outbound—54″

43—2 legs outbound—60″

48—2 legs outbound—66″

57—2 legs outbound—72″

Dimensions

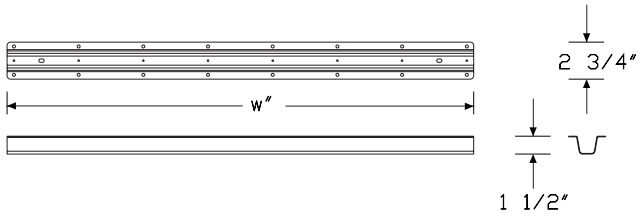

Specification Information

Step 1.

HZ510.

Step 2. Width

39	38⅝″ wide
43	43¼″ wide
48	48″ wide
57	57⅜″ wide
67	66¾″ wide
81	80⅞″ wide

Prices for Steps 1-2.

HZ510.	**39**	$88
	43	$88
	48	$88
	57	$88
	67	$88
	81	$88

OE1 Rectangular Table HZ515S

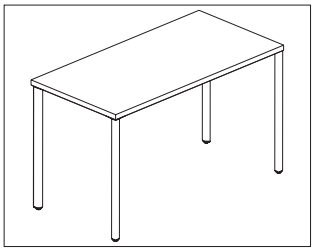

Product Information

Description

This rectangular table comes with 4 teardrop-shaped post legs. It has a laminate top with thermoplastic edge, laminate top with thermoplastic-backed plywood edge, or veneer top and edge. All casters are locking casters. Glides have 1 1/2" leveling range. Shipped knocked down.

Notes

Surface thickness is 1 1/4".

Reinforcement channels are used under table tops 54" wide and wider. Channel will be located along center line for 18"- and 24"-deep surfaces, and 19" from front edge for 30"-deep surfaces. Reinforcement channel included.

Caster option has all locking casters.

Legs can be installed with angled edge out or with rounded edge out. Choice is made at time of installation.

Order Logic Mini power units (Y1414., Y1412.) separately.

MicrobeCare™ is an antimicrobial coating applied to the laminate or veneer surface of this product.

MicrobeCare™ protects products from mold, mildew, algae, and bacteria that cause deterioration, discoloration, odors, and stains.

MicrobeCare™ is registered with the US Environmental Protection Agency (EPA).

Dimensions

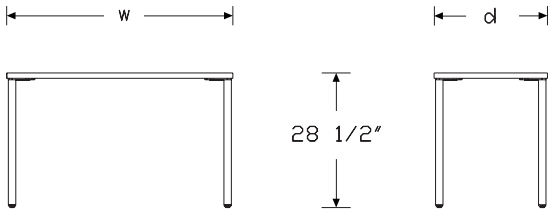

Specification Information

Step 1.

HZ515

Step 2. Edge

S. squared-edge

Step 3. Depth

18 18" deep
24 24" deep
30 30" deep

Step 4. Width

For 18" deep (18)

48 48" wide
60 60" wide
72 72" wide

For 24" deep (24) or 30" deep (30)

36 36" wide
42 42" wide
48 48" wide
54 54" wide
60 60" wide
66 66" wide
72 72" wide

Step 5. Surface Material

L high-pressure laminate top/thermoplastic edge
U high-pressure laminate/universal edge
W veneer top/veneer edge A
A high-pressure laminate top/thermoplastic edge with MicrobeCare™ A
C high-pressure laminate top/universal edge with MicrobeCare™ A

Prices for Steps 1-5.

		L	U	W	A	C
HZ515S. 18	**48**	$1066	1066	1296	1162	1162
	60	$1169	1169	1434	1264	1264
	72	$1262	1262	1557	1360	1360

24	**36**	$1066	1066	1296	1150	1150
	42	$1120	1120	1366	1203	1203
	48	$1170	1170	1438	1267	1267
	54	$1242	1242	1526	1339	1339
	60	$1315	1315	1623	1413	1413
	66	$1408	1408	1745	1505	1505
	72	$1509	1509	1870	1606	1606
30	**36**	$1106	1106	1352	1190	1190
	42	$1160	1160	1421	1244	1244
	48	$1221	1221	1499	1318	1318
	54	$1291	1291	1591	1390	1390
	60	$1370	1370	1692	1467	1467
	66	$1465	1465	1816	1562	1562
	72	$1567	1567	1953	1664	1664

Step 6. Power Access Cutout

For 18" deep (18)

NC	no cutout	+$0

For 24" deep (24) or 30" deep (30) with 36" wide (36)

NC	no cutout	+$0

For 24" deep (24) or 30" deep (30) with 42" wide (42), 48" wide (48), 54" wide (54), or 60" wide (60), or 66" wide (66), or 72" wide (72)

NC	no cutout	+$0
RC	right cutout for Logic Mini - Y1414 and Y1412.1	+$55
LC	left cutout for Logic Mini - Y1414 and Y1412.1	+$55
CC	center cutout for Logic Mini - Y1414 and Y1412.1	+$55

Step 7.

Top Finish

For high-pressure laminate top/thermoplastic edge (L), high-pressure laminate/universal edge (U), high-pressure laminate top/thermoplastic edge with MicrobeCare™ (A), or high-pressure laminate top/universal edge with MicrobeCare™ (C)

76	light brown walnut	+$0
8Q	folkstone grey	+$0
91	white	+$0
98	studio white	+$0
CL	cool grey neutral	+$0
HF	inner tone light	+$0
HM	natural maple	+$0
HP	light anigre	+$0
HX	aged cherry	+$0
LBA	clear on ash	+$0
LBB	oak on ash	+$0
LBC	walnut on ash	+$0
LBF	neutral twill	+$0
LBJ	graphite twill	+$0
LBQ	white twill	+$0
LBR	phantom ecru A	+$0
LBS	phantom cocoa A	+$0
LBU	medium matte walnut A	+$0
LBV	warm grey teak A	+$0
LT	light tone	+$0
LU	soft white	+$0
WL	sandstone	+$0
WN	warm grey neutral	+$0

Top/Edge Finish

For veneer top/veneer edge (W)

2U	light brown walnut A	+$85
40	dark brown walnut A	+$85
CHD	noble cherry A	+$85
ET	clear on ash A	+$85
EU	oak on ash A	+$85
EV	walnut on ash A	+$85
EW	medium matte walnut A	+$85
OK	white oak (nonstandard) A	+$85
OU	walnut A	+$85
UL	natural maple A	+$85
WHN	natural white oak A	+$85

Step 8. Edge Finish

For high-pressure laminate top/thermoplastic edge (L) or high-pressure laminate top/thermoplastic edge with MicrobeCare™ (A)

76	light brown walnut	+$0
8Q	folkstone grey	+$0
91	white	+$0
98	studio white	+$0
BU	black umber	+$0
CL	cool grey neutral	+$0
HF	inner tone light	+$0
HM	natural maple	+$0
HP	light anigre	+$0
HX	aged cherry	+$0
LBA	clear on ash	+$0
LBB	oak on ash	+$0
LBC	walnut on ash	+$0
LBF	neutral twill	+$0
LBJ	graphite twill	+$0
LBQ	white twill	+$0
LBR	phantom ecru	+$0
LBS	phantom cocoa	+$0
LBU	medium matte walnut	+$0
LBV	warm grey teak	+$0
LU	soft white	+$0
WL	sandstone	+$0

For high-pressure laminate/universal edge (U) or high-pressure laminate top/universal edge with MicrobeCare™ (C)

PLY	plywood edge	+$50

Step 9. Leg Finish

Metallic Paint

CN	metallic champagne	+$0
MS	metallic silver	+$0
SNA	satin aluminum	+$30
SNB	satin bronze	+$30
SNC	satin carbon	+$30

Sand Texture Paint

8Q	folkstone grey	+$0
91	white	+$0
98	studio white	+$0
BK	black	+$0
G1	graphite	+$0
WL	sandstone	+$0
DB3	glacier	+$125
DN2	nightfall	+$125
DR1	canyon	+$125
OLF	olive	+$125

Step 10. Base Type

C	casters	+$0
G	glides	+$0

OE1 Accessory Bridge HZ520.

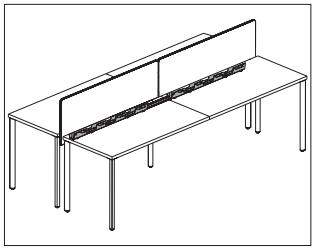

Product Information

Description

This Accessory Bridge attaches OE1 Workspace Collection™ tables together to create a back-to-back bench. It has an optional wire management tray.

Notes

Accessory Bridge does not work for 36"-wide tables.

Specify no power and wire management (N) option for just ganging brackets to connect tables together.

Flat edge and Pari screens can be mounted to the Accessory Bridge.

See the planning guide for more information.

Dimensions

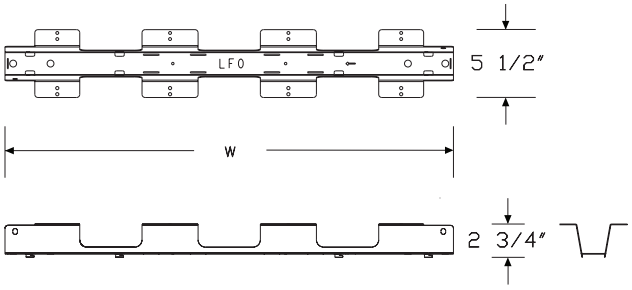

Specification Information

Step 1.

HZ520.

Step 2. Width

1	For surfaces 42" wide or 48" wide
2	For surfaces 54" wide or 60" wide
3	For surfaces 66" wide or 72" wide

Step 3. Power & Wire Management

N	no power and wire management
P	for use with power and wire management

Prices for Steps 1-3.

		N	P
HZ520.	**1**	$229	552
	2	$260	632
	3	$294	683

Step 4. Bracket Finish

BK	black	+$0

OE1 End Caps for Accessory Bridge 2/Pkg

HZ525.

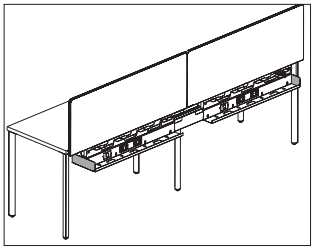

Product Information

Description

These end caps attach to the ends of the OE1 Workspace Collection™ Accessory Bridge. Package contains 2 end caps.

Dimensions

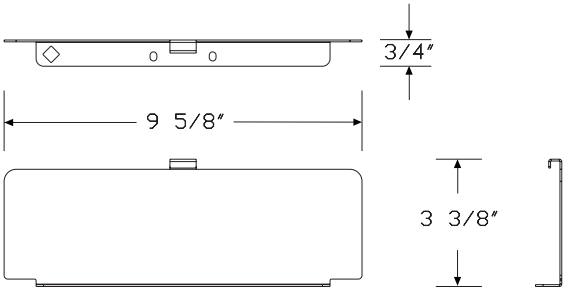

Specification Information

Step 1.

HZ525.	$158

Step 2. Bracket Finish

BK	black	+$0

OE1 Bridge Connector HZ530.

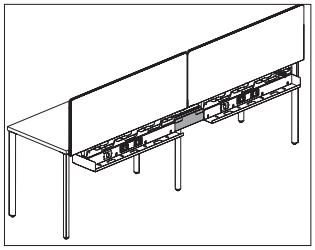

Product Information

Description

This connector is intended to bridge the gap between adjacent table Accessory Bridge with power and wire management. Product is UL listed.

Notes

When using power on connected tables, the OE1 Workspace Collection™ Bridge Connector is required and must be ordered.

Dimensions

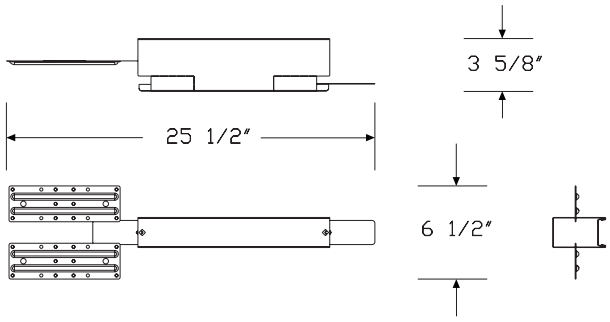

Specification Information

Step 1.

HZ530.	$161

Step 2. Finish

BK	black	+$0

OE1 Worksurface, Project Table HZ550S

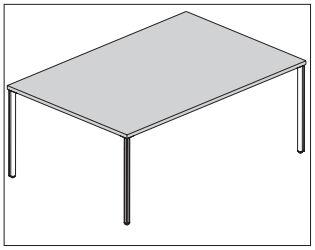

Product Information

Description

This surface attaches to OE1 Workspace Collection™ Teardrop Legs to create a project table. It has a laminate top with thermoplastic edge, laminate top with thermoplastic-backed plywood edge, or veneer top and edge. Laminate and veneer surfaces are 1¼″ thick.

Notes

MicrobeCare™ is an antimicrobial coating applied to the laminate or veneer surface of this product.

MicrobeCare protects products from mold, mildew, algae, and bacteria that cause deterioration, discoloration, odors, and stains.

MicrobeCare is registered with the US Environmental Protection Agency (EPA).

Project tables 84″ or 96″ wide require an intermediate leg on each side, for a total of 6 legs.

All project tables require 2 stiffeners (HZ510.), ordered separately.

Dimensions

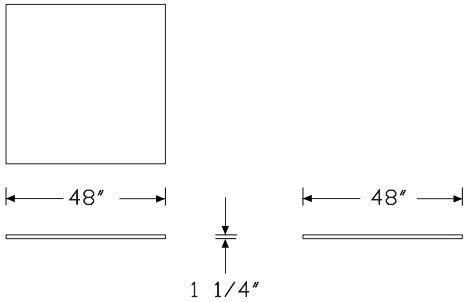

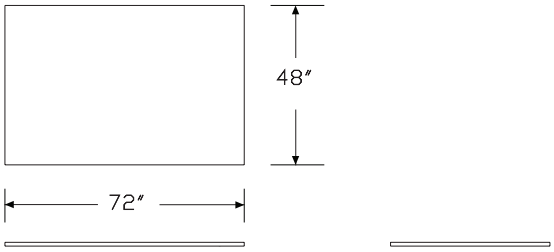

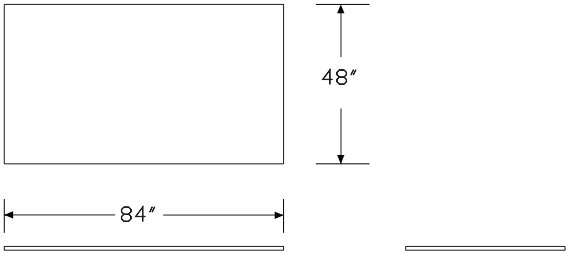

Specification Information

Step 1.

HZ550

Step 2. Edge

S.	squared-edge

Step 3. Depth

42	42" deep
48	48" deep

Step 4. Width

42	42" wide
48	48" wide
50	49.75" wide
51	50.75" wide
54	54" wide
60	60" wide
62	61.75" wide
63	62.75" wide
66	66" wide
72	72" wide
84	84" wide
96	96" wide

Step 5. Surface Material

L	high-pressure laminate top/thermoplastic edge
U	high-pressure laminate/universal edge
W	veneer top/veneer edge A
A	high-pressure laminate top/thermoplastic edge with MicrobeCare™ A
C	high-pressure laminate top/universal edge with MicrobeCare™ A

Prices for Steps 1-5.

		L	U	W	A	C
HZ550S. 42	**42**	$617	617	1079	703	703
	48	$755	755	1318	851	851
	50	$810	810	1413	906	906
	51	$862	862	1509	959	959
	54	$889	889	1555	987	987
	60	$1026	1026	1795	1123	1123
	62	$1079	1079	1889	1178	1178
	63	$1134	1134	1984	1231	1231
	66	$1161	1161	2032	1259	1259
	72	$1299	1299	2270	1395	1395
	84	$1434	1434	2507	1545	1545
	96	$1520	1520	2658	1629	1629
48	**42**	$755	755	1318	851	851
	48	$910	910	1589	1006	1006
	50	$969	969	1692	1066	1066
	51	$1028	1028	1798	1125	1125
	54	$1059	1059	1849	1156	1156
	60	$1208	1208	2112	1306	1306
	62	$1268	1268	2216	1366	1366
	63	$1328	1328	2321	1425	1425
	66	$1357	1357	2373	1455	1455
	72	$1508	1508	2635	1604	1604
	84	$1656	1656	2896	1767	1767
	96	$1750	1750	3063	1860	1860

Step 6. Power Access Cutout

For 42" wide (42), 48" wide (48), 49.75" wide (50), 50.75" wide (51), 54" wide (54), 60" wide (60), 61.75" wide (62), or 62.75" wide (63)

NC	no cutout	+$0
C1	one center cutout for Logic Mini (RECTANGLE) -	+$65
C2	double center cutouts for logic mini (rectangle) - Y1414 AND Y1412.1	+$130
C3	one center cutout for Logic Mini (SQUARE) -	+$65
L3	one center cutout for logic Y1425 3 port	+$65
L5	one center cutout for logic Y1425 5 port	+$65
L6	one center cutout for logic Y1425 6 port	+$65
TB	one center cutout for technology bucket	+$190

For 66" wide (66), 72" wide (72), 84" wide (84), or 96" wide (96)

NC	no cutout	+$0
C4	two cutouts for logic mini (rectangle) -	+$130
C5	double center cutouts for logic mini (rectangle) - Y1414 AND Y1412.1	+$130
C6	two cutouts for logic mini (square) -	+$130
L3	two cutouts for logic Y1425 3 port	+$130
L5	two cutouts for logic Y1425 5 port	+$130
L6	two cutouts for logic Y1425 6 port	+$130
TB	one center cutout for technology bucket	+$130

Step 7.

Top Finish

For high-pressure laminate top/thermoplastic edge (L), high-pressure laminate/universal edge (U), high-pressure laminate top/thermoplastic edge with MicrobeCare™ (A), or high-pressure laminate top/universal edge with MicrobeCare™ (C)

76	light brown walnut	+$0
8Q	folkstone grey	+$0
91	white	+$0
98	studio white	+$0
CL	cool grey neutral	+$0
HF	inner tone light	+$0
HM	natural maple	+$0
HP	light anigre	+$0
HX	aged cherry	+$0
LBA	clear on ash	+$0
LBB	oak on ash	+$0
LBC	walnut on ash	+$0
LBF	neutral twill	+$0
LBJ	graphite twill	+$0
LBQ	white twill	+$0
LBR	phantom ecru A	+$0
LBS	phantom cocoa A	+$0
LBU	medium matte walnut A	+$0
LBV	warm grey teak A	+$0
LT	light tone	+$0
LU	soft white	+$0
WL	sandstone	+$0
WN	warm grey neutral	+$0

Top/Edge Finish

For veneer top/veneer edge (W)

2U	light brown walnut A	+$85
40	dark brown walnut A	+$85
CHD	noble cherry	+$85
ET	clear on ash A	+$85
EU	oak on ash A	+$85
EV	walnut on ash A	+$85
EW	medium matte walnut A	+$85
OK	white oak (nonstandard) A	+$85
UL	natural maple A	+$85
WHN	natural white oak	+$85

Step 8. Edge Finish

For high-pressure laminate top/thermoplastic edge (L) or high-pressure laminate top/thermoplastic edge with MicrobeCare™ (A)

76	light brown walnut	+$0
8Q	folkstone grey	+$0
91	white	+$0
98	studio white	+$0
BU	black umber	+$0
CL	cool grey neutral	+$0
HF	inner tone light	+$0
HM	natural maple	+$0
HP	light anigre	+$0
HX	aged cherry	+$0
LBA	clear on ash	+$0
LBB	oak on ash	+$0
LBC	walnut on ash	+$0
LBF	neutral twill	+$0
LBJ	graphite twill	+$0
LBQ	white twill	+$0
LBR	phantom ecru	+$0
LBS	phantom cocoa	+$0
LBU	medium matte walnut	+$0
LBV	warm grey teak	+$0
LU	soft white	+$0
WL	sandstone	+$0

For high-pressure laminate/universal edge (U) or high-pressure laminate top/universal edge with MicrobeCare™ (C)

PLY	plywood edge	+$50

OE1 Project Table HZ555S

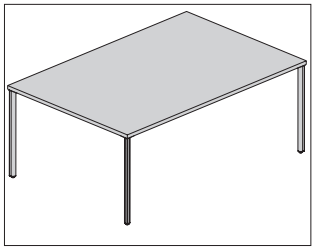

Product Information

Description

This OE1 Workspace Collection™ seated-height Project Table has a laminate top with thermoplastic edge, laminate top with thermoplastic-backed plywood edge, or veneer top and edge. Laminate and veneer surfaces are 1¼″ thick. Available with cutouts to accommodate Herman Miller power options that are ordered separately. Table comes with 1½″ leveling glides. Shipped knocked down.

Notes

All project tables come with 2 stiffeners (HZ510.).

Project tables that are 84″ or 96″ wide come with an intermediate leg on each side, for a total of 6 legs.

All casters are locking.

Dimensions

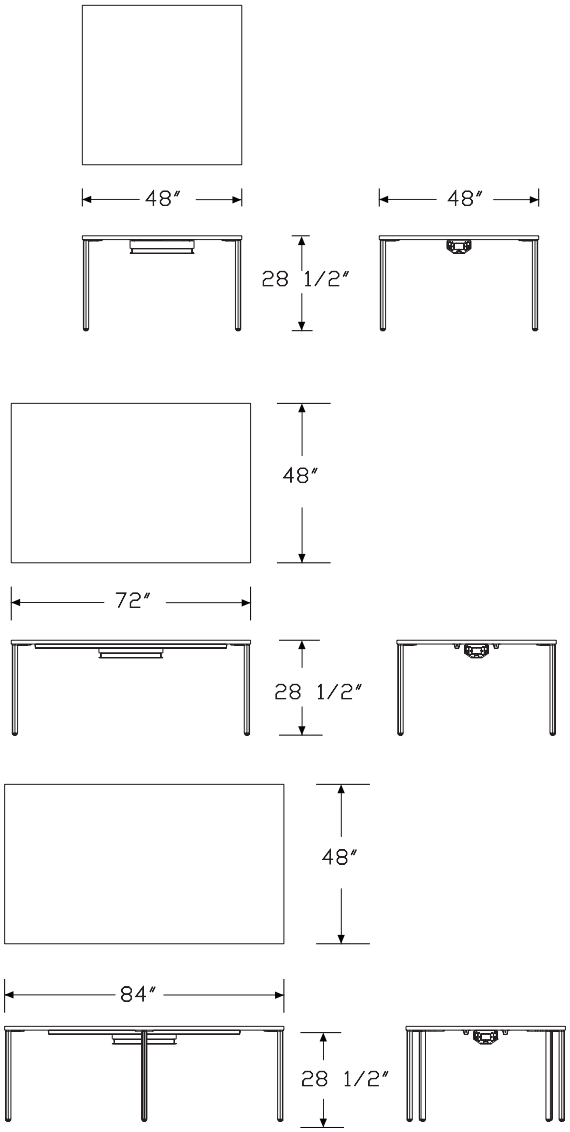

Specification Information

Step 1.

HZ555

Step 2. Edge

S.	squared-edge

Step 3. Depth

42	42" deep
48	48" deep

Step 4. Width

42	42" wide
48	48" wide
50	49.75" wide
51	50.75" wide
54	54" wide
60	60" wide
62	61.75" wide
63	62.75" wide
66	66" wide
72	72" wide
84	84" wide
96	96" wide

Step 5. Surface Material

L	high-pressure laminate top/thermoplastic edge
U	high-pressure laminate/universal edge
W	veneer top/veneer edge A
A	high-pressure laminate top/thermoplastic edge with MicrobeCare™ A
C	high-pressure laminate top/universal edge with MicrobeCare™ A

Prices for Steps 1-5.

		L	U	W	A	C
HZ555S. 42	**42**	$1344	1344	2345	1429	1429
	48	$1473	1473	2583	1570	1570
	50	$1525	1525	2675	1622	1622
	51	$1577	1577	2759	1675	1675
	54	$1603	1603	2824	1701	1701
	60	$1733	1733	3038	1830	1830
	62	$1784	1784	3102	1881	1881
	63	$1835	1835	3205	1932	1932
	66	$1861	1861	3271	1959	1959
	72	$1991	1991	3478	2089	2089
	84	$2249	2249	3936	2361	2361
	96	$2580	2580	4454	2690	2690
48	**42**	$1473	1473	2583	1570	1570
	48	$1621	1621	2836	1718	1718
	50	$1678	1678	2935	1775	1775
	51	$1735	1735	3038	1832	1832
	54	$1764	1764	3102	1860	1860
	60	$1906	1906	3335	2002	2002
	62	$1963	1963	3426	2060	2060
	63	$2020	2020	3541	2117	2117
	66	$2049	2049	3607	2145	2145
	72	$2191	2191	3840	2288	2288
	84	$2450	2450	4279	2558	2558
	96	$2708	2708	4738	2818	2818

Step 6. Power Access Cutout

For 42" wide (42), 48" wide (48), 49.75" wide (50), 50.75" wide (51), 54" wide (54), 60" wide (60), 61.75" wide (62), or 62.75" wide (63)

NC	no cutout	+$0
C1	one center cutout for Logic Mini (RECTANGLE) -	+$65
C2	double center cutouts for logic mini (rectangle) - Y1414 AND Y1412.1	+$130
C3	one center cutout for Logic Mini (SQUARE) -	+$65
L3	one center cutout for logic Y1425 3 port	+$65
L5	one center cutout for logic Y1425 5 port	+$65
L6	one center cutout for logic Y1425 6 port	+$65
TB	one center cutout for technology bucket	+$190

For 66" wide (66), 72" wide (72), 84" wide (84), or 96" wide (96)

NC	no cutout	+$0
C4	two cutouts for logic mini (rectangle) -	+$130
C5	double center cutouts for logic mini (rectangle) - Y1414 AND Y1412.1	+$130
C6	two cutouts for logic mini (square) -	+$130
L3	two cutouts for logic Y1425 3 port	+$130
L5	two cutouts for logic Y1425 5 port	+$130
L6	two cutouts for logic Y1425 6 port	+$130
TB	one center cutout for technology bucket	+$130

Step 7.

Top Finish

For high-pressure laminate top/thermoplastic edge (L), high-pressure laminate/universal edge (U), high-pressure laminate top/thermoplastic edge with MicrobeCare™ (A), or high-pressure laminate top/universal edge with MicrobeCare™ (C)

76	light brown walnut	+$0
8Q	folkstone grey	+$0
91	white	+$0
98	studio white	+$0
CL	cool grey neutral	+$0
HF	inner tone light	+$0
HM	natural maple	+$0
HP	light anigre	+$0
HX	aged cherry	+$0
LBA	clear on ash	+$0
LBB	oak on ash	+$0
LBC	walnut on ash	+$0
LBF	neutral twill	+$0
LBJ	graphite twill	+$0
LBQ	white twill	+$0
LBR	phantom ecru A	+$0
LBS	phantom cocoa A	+$0
LBU	medium matte walnut A	+$0
LBV	warm grey teak A	+$0
LT	light tone	+$0
LU	soft white	+$0
WL	sandstone	+$0
WN	warm grey neutral	+$0

Top/Edge Finish

For veneer top/veneer edge (W)

2U	light brown walnut A	+$85
40	dark brown walnut A	+$85
CHD	noble cherry	+$85
ET	clear on ash A	+$85
EU	oak on ash A	+$85
EV	walnut on ash A	+$85
EW	medium matte walnut A	+$85
OK	white oak (nonstandard) A	+$85
UL	natural maple A	+$85
WHN	natural white oak	+$85

Step 8. Edge Finish

For high-pressure laminate top/thermoplastic edge (L) or high-pressure laminate top/thermoplastic edge with MicrobeCare™ (A)

76	light brown walnut	+$0
8Q	folkstone grey	+$0
91	white	+$0
98	studio white	+$0
BU	black umber	+$0
CL	cool grey neutral	+$0
HF	inner tone light	+$0
HM	natural maple	+$0
HP	light anigre	+$0
HX	aged cherry	+$0
LBA	clear on ash	+$0
LBB	oak on ash	+$0
LBC	walnut on ash	+$0
LBF	neutral twill	+$0
LBJ	graphite twill	+$0
LBQ	white twill	+$0
LBR	phantom ecru	+$0
LBS	phantom cocoa	+$0
LBU	medium matte walnut	+$0
LBV	warm grey teak	+$0
LU	soft white	+$0
WL	sandstone	+$0

For high-pressure laminate/universal edge (U) or high-pressure laminate top/universal edge with MicrobeCare™ (C)

PLY	plywood edge	+$50

Step 9. Leg Finish		
Metallic Paint		
CN	metallic champagne	+$0
MS	metallic silver	+$0
SNA	satin aluminum	+$135
SNB	satin bronze	+$135
SNC	satin carbon	+$135
Sand Texture Paint		
8Q	folkstone grey	+$0
91	white	+$0
98	studio white	+$0
BK	black	+$0
G1	graphite	+$0
WL	sandstone	+$0
DB3	glacier	+$125
DN2	nightfall	+$125
DR1	canyon	+$125
OLF	olive	+$125

Step 10. Base Type		
C	casters	+$0
G	glides	+$0

OE1 Leg Cable Manager for Seated Height Tables

HZ560.

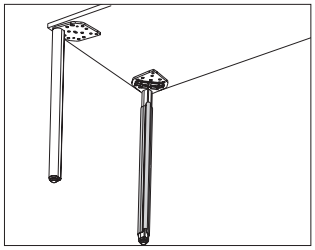

Product Information

Description

This cable manager routes cables from the underside of an OE1 Workspace Collection™ seated height table down to the floor. The kit includes the cable manager and a cord bracket that attaches to the leg plate.

Notes

Cable manager can hold 2 cords.

Dimensions

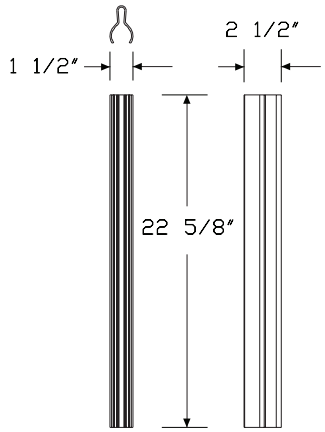

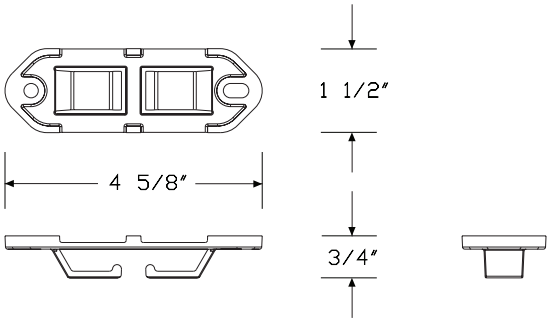

Specification Information

Step 1.

HZ560.

Step 2. Cable Manager Height

23	23″ high for seated height tables

Prices for Steps 1-2.

HZ560. 23	$117

Step 3. Finish

8Q	folkstone grey	+$0
BK	black	+$0
DB3	glacier	+$20
DN2	nightfall	+$20
DR1	canyon	+$20
OLF	olive	+$20

OE1 Ganging Connector HZ565.

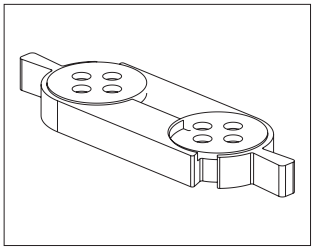

Product Information

Description

This kit has 2 clips that attach to the underside of 2 adjacent surfaces, ganging them together to provide stability and allow components to be routed from 1 surface to another. Finish is black. Package contains 1 full connector assembly.

Notes

When ganging along the width of 2 surfaces, 2 connector assemblies are required. When ganging along the depth of 2 surfaces, 1 connector assembly is required. See OE1 planning guide for more information.

Dimensions

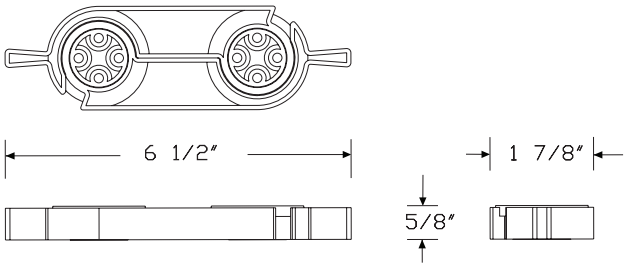

Specification Information

Step 1.

HZ565.	$81

OE1 Bridge Mounted Screen, Flat Edge HZ535.

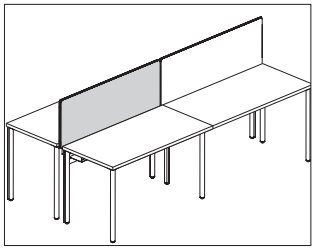

Product Information

Description

This flat edge screen provides privacy on the Accessory Bridge in a bench configuration with OE1 Workspace Collection™ tables. Installed height of the screen is 42", 46", or 53" high. Attachment hardware included.

Notes

Screen only attaches to the OE1 Accessory Bridge (HZ520.).

Screen accepts Customer's Own Material (COM). Yardage is estimated for nondirectional, 54" wide fabrics.

For vertical fabric direction (T, E) for 42" and 48" wide only:

Height—Yardage

14—1.26

18—1.51

25—1.95

For horizontal fabric direction (R, D) for 14" and 18" height:

Width—Yardage

42—1.51

48—1.70

54—1.89

60—2.08

66—2.27

72—2.46

For 25" height:

42—3.02

48—3.40

54—3.78

60—3.85

66—4.54

72—4.91

Dimensions

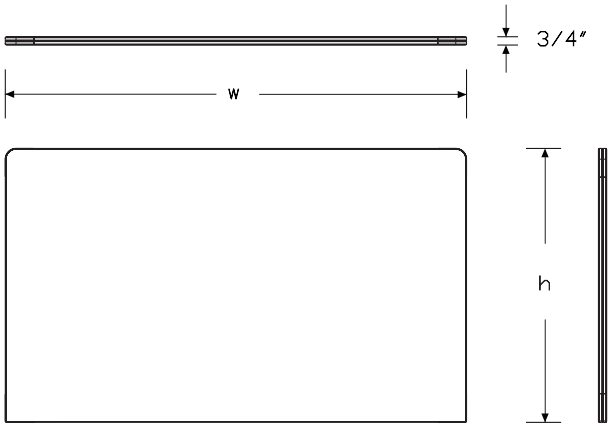

OE1 Bridge Mounted Screen, Flat Edge *continued*

Specification Information	
Step 1.	
HZ535.	
Step 2. Height	
14	14" high (to reach 42" datum)
18	18" high (to reach 46" datum)
25	25" high (to reach 53" datum)
Step 3. Width	
42	42" wide
48	48" wide
54	54" wide
60	60" wide
66	66" wide
72	72" wide
Step 4. Surface Material	
For 42" wide (42) or 48" wide (48)	
D	tackable fabric, horizontal with MicrobeCare™
E	tackable fabric with MicrobeCare™
R	tackable fabric, horizontal
T	tackable fabric
For 54" wide (54), 60" wide (60), 66" wide (66), or 72" wide (72)	
D	tackable fabric, horizontal with MicrobeCare™
R	tackable fabric, horizontal

Prices for Steps 1-4.

		D	E	R	T
HZ535. 14	**42**	$858	858	778	778
	48	$910	910	829	829
	54	$963	—	882	—
	60	$1026	—	945	—
	66	$1090	—	1010	—
	72	$1156	—	1075	—
18	**42**	$952	952	872	872
	48	$1010	1010	930	930
	54	$1069	—	990	—
	60	$1138	—	1060	—
	66	$1213	—	1132	—
	72	$1285	—	1205	—
25	**42**	$1083	1083	1003	1003
	48	$1150	1150	1070	1070
	54	$1216	—	1135	—
	60	$1299	—	1218	—
	66	$1382	—	1302	—
	72	$1465	—	1384	—

Step 5. Fabric

For 14" high (to reach 42" datum) (14) or 18" high (to reach 46" datum) (18) with 42" wide (42), or 48" wide (48)	
Price Category 1	+$0
Price Category 2	+$23
Price Category 3	+$55
Price Category 4	+$98
Price Category 5	+$168
Price Category B	+$176
Price Category C	+$239
Price Category E	+$361

For 25" high (to reach 53" datum) (25) with 42" wide (42), or 48" wide (48)	
Price Category 1	+$0
Price Category 2	+$41
Price Category 3	+$97
Price Category 4	+$174
Price Category 5	+$295
Price Category B	+$311
Price Category C	+$420
Price Category E	+$636

For 14" high (to reach 42" datum) (14) or 18" high (to reach 46" datum) (18) with 54" wide (54), or 60" wide (60)	
Price Category 1	+$0
Price Category 2	+$29
Price Category 3	+$68
Price Category 4	+$121
Price Category 5	+$208
Price Category B	+$217
Price Category C	+$294
Price Category E	+$445

OE1 Bridge Mounted Screen, Flat Edge *continued*

For 14" high (to reach 42" datum) (14) or 18" high (to reach 46" datum) (18) with 66" wide (66), or 72" wide (72)	
Price Category 1	+$0
Price Category 2	+$34
Price Category 3	+$82
Price Category 4	+$145
Price Category 5	+$247
Price Category B	+$259
Price Category C	+$350
Price Category E	+$530

For 25" high (to reach 53" datum) (25) with 54" wide (54), or 60" wide (60)	
Price Category 1	+$0
Price Category 2	+$50
Price Category 3	+$121
Price Category 4	+$215
Price Category 5	+$365
Price Category B	+$384
Price Category C	+$520
Price Category E	+$785

For 25" high (to reach 53" datum) (25) with 66" wide (66), or 72" wide (72)	
Price Category 1	+$0
Price Category 2	+$59
Price Category 3	+$144
Price Category 4	+$256
Price Category 5	+$434
Price Category B	+$456
Price Category C	+$618
Price Category E	+$934

OE1 Bridge Mounted Screen, Pari HZ540.

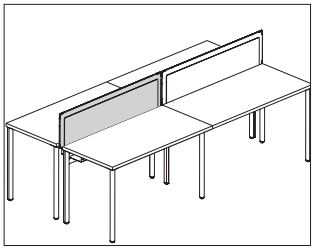

Product Information

Description

This Pari screen provides privacy on the Accessory Bridge in a bench configuration with OE1 tables. Installed height of the screen is 42", 46", or 53" high. Attachment hardware included.

Notes

Screen only attaches to the OE1 Accessory Bridge (HZ520.).

Screen accepts Customer's Own Material (COM). Yardage is estimated for nondirectional, 54" wide fabrics.

For vertical fabric direction (T, E) for 42" and 48" wide only:

Height—Yardage

14—1.26

18—1.51

25—1.95

For horizontal fabric direction (R, D) for 14" and 18" height:

Width—Yardage

42—1.51

48—1.70

54—1.89

60—2.08

66—2.27

72—2.46

For 25" height:

42—3.02

48—3.40

54—3.78

60—3.85

66—4.54

72—4.91

Dimensions

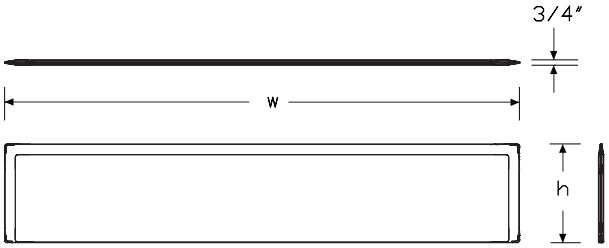

Specification Information

Step 1.

HZ540.

Step 2. Height

14 14" high (to reach 42" datum)

18 18" high (to reach 46" datum)

25 25" high (to reach 53" datum)

Step 3. Width

42 42" wide

48 48" wide

54 54" wide

60 60" wide

66 66" wide

72 72" wide

Step 4. Surface Material

For 42" wide (42) or 48" wide (48)

D tackable fabric, horizontal with MicrobeCare™

E tackable fabric with MicrobeCare™

R tackable fabric, horizontal

T tackable fabric

For 54" wide (54), 60" wide (60), 66" wide (66), or 72" wide (72)

D tackable fabric, horizontal with MicrobeCare™

R tackable fabric, horizontal

Prices for Steps 1-4.

		D	E	R	T
HZ540. 14	**42**	$1073	1073	993	993
	48	$1162	1162	1083	1083
	54	$1254	—	1174	—
	60	$1332	—	1251	—
	66	$1409	—	1330	—
	72	$1487	—	1407	—
18	**42**	$1191	1191	1110	1110
	48	$1292	1292	1214	1214
	54	$1395	—	1314	—
	60	$1482	—	1402	—
	66	$1568	—	1489	—
	72	$1656	—	1576	—

25 42	$1303	1303	1223	1223
48	$1414	1414	1334	1334
54	$1525	—	1444	—
60	$1621	—	1540	—
66	$1717	—	1638	—
72	$1812	—	1733	—

Step 5. Fabric

For 14" high (to reach 42" datum) (14) or 18" high (to reach 46" datum) (18) with 42" wide (42), or 48" wide (48)

Price Category 1	+$0
Price Category 2	+$23
Price Category 3	+$55
Price Category 4	+$98
Price Category 5	+$168
Price Category B	+$176
Price Category C	+$239
Price Category E	+$361

For 25" high (to reach 53" datum) (25) with 42" wide (42), or 48" wide (48)

Price Category 1	+$0
Price Category 2	+$41
Price Category 3	+$97
Price Category 4	+$174
Price Category 5	+$295
Price Category B	+$311
Price Category C	+$420
Price Category E	+$636

For 14" high (to reach 42" datum) (14) or 18" high (to reach 46" datum) (18) with 54" wide (54), or 60" wide (60)

Price Category 1	+$0
Price Category 2	+$29
Price Category 3	+$68
Price Category 4	+$121
Price Category 5	+$208
Price Category B	+$217
Price Category C	+$294
Price Category E	+$445

For 14" high (to reach 42" datum) (14) or 18" high (to reach 46" datum) (18) with 66" wide (66), or 72" wide (72)

Price Category 1	+$0
Price Category 2	+$34
Price Category 3	+$82
Price Category 4	+$145
Price Category 5	+$247
Price Category B	+$259
Price Category C	+$350
Price Category E	+$530

For 25" high (to reach 53" datum) (25) with 54" wide (54), or 60" wide (60)

Price Category 1	+$0
Price Category 2	+$50
Price Category 3	+$121
Price Category 4	+$215
Price Category 5	+$365
Price Category B	+$384
Price Category C	+$520
Price Category E	+$785

For 25" high (to reach 53" datum) (25) with 66" wide (66), or 72" wide (72)

Price Category 1	+$0
Price Category 2	+$59
Price Category 3	+$144
Price Category 4	+$256
Price Category 5	+$434
Price Category B	+$456
Price Category C	+$618
Price Category E	+$934

OE1 Bridge Mounted Screen, Laminate HZ545.

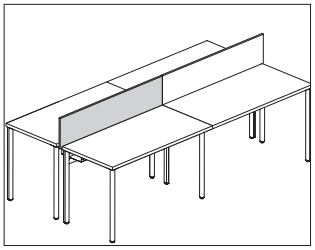

Product Information

Description

This laminate screen provides privacy on the Accessory Bridge in a bench configuration with OE1 Workspace Collection™ tables. Installed height of the screen is 42", 46", or 53" high. Attachment hardware included.

Notes

Screen only attaches to the OE1 Accessory Bridge (HZ520.).

Dimensions

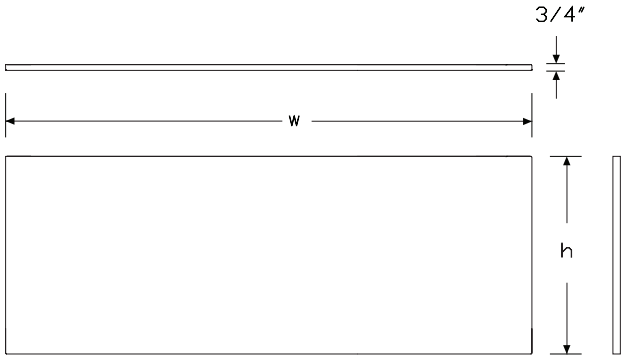

Specification Information

Step 1.

HZ545.

Step 2. Height

14	14" high (to reach 42" datum)
18	18" high (to reach 46" datum)
25	25" high (to reach 53" datum)

Step 3. Width

42	42" wide
48	48" wide
54	54" wide
60	60" wide
66	66" wide
72	72" wide

Step 4. Surface Material

L	high-pressure laminate top/thermoplastic edge

Prices for Steps 1-4.

			L
HZ545.	**14**	**42**	$485
		48	$525
		54	$564
		60	$615
		66	$648
		72	$683
	18	**42**	$583
		48	$631
		54	$676
		60	$739
		66	$778
		72	$817
	25	**42**	$699
		48	$756
		54	$812
		60	$886
		66	$934
		72	$980

Step 5. Grain Direction

HRG	horizontal grain	+$0

OE1 Bridge Mounted Screen, Laminate *continued*

Step 6. Surface Finish		
76	light brown walnut	+$0
8Q	folkstone grey	+$0
91	white	+$0
98	studio white	+$0
CL	cool grey neutral	+$0
G1	graphite	+$0
HM	natural maple	+$0
HP	light anigre	+$0
HX	aged cherry	+$0
LBA	clear on ash	+$0
LBB	oak on ash	+$0
LBC	walnut on ash	+$0
LBF	neutral twill	+$0
LBJ	graphite twill	+$0
LBQ	white twill	+$0
LBR	phantom ecru	+$0
LBS	phantom cocoa	+$0
LBU	medium matte walnut	+$0
LBV	warm grey teak	+$0
LU	soft white	+$0
WL	sandstone	+$0
WN	warm grey neutral	+$0

Step 7. Edge Finish		
76	light brown walnut	+$0
8Q	folkstone grey	+$0
91	white	+$0
98	studio white	+$0
BU	black umber	+$0
CL	cool grey neutral	+$0
G2	graphite satin	+$0
HF	inner tone light	+$0
HM	natural maple	+$0
HP	light anigre	+$0
HX	aged cherry	+$0
LBA	clear on ash	+$0
LBB	oak on ash	+$0
LBC	walnut on ash	+$0
LBF	neutral twill	+$0
LBJ	graphite twill	+$0
LBQ	white twill	+$0
LBR	phantom ecru	+$0
LBS	phantom cocoa	+$0
LBU	medium matte walnut	+$0
LBV	warm grey teak	+$0
LU	soft white	+$0
WL	sandstone	+$0
WN	warm grey neutral	+$0

OE1 Nook HZ570S

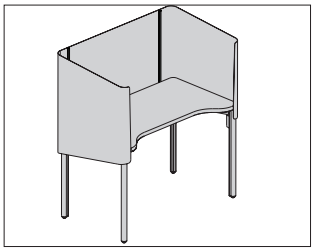

Product Information

Description

This OE1 Workspace Collection™ Nook provides privacy and boundary for focused work. It has a 26″D×45″W laminate top with thermoplastic edge, laminate top with thermoplastic-backed plywood edge, or veneer top and edge. Laminate and veneer surfaces are 1¼″ thick. The screen extends 21½″ above the surface and has optional liners.

Notes

There is a 1″ gap between surface and screen.

Liners (HZ575.) are optional, and can also be ordered separately.

All Liner sections come in the same specified fabric.

Dimensions

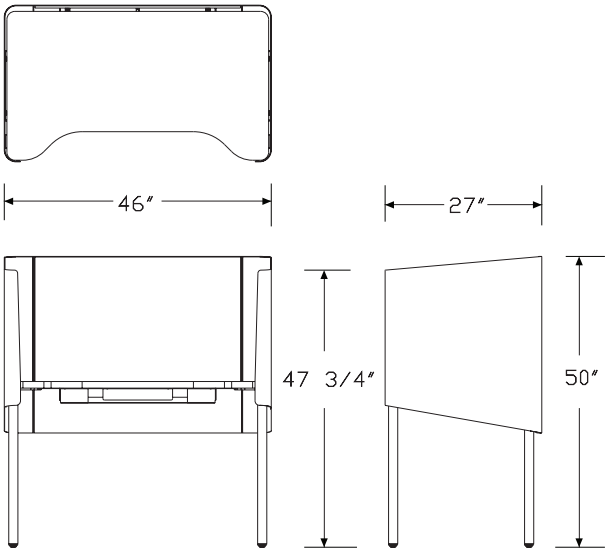

Specification Information

Step 1.

HZ570

Step 2. Edge

S. squared-edge

Step 3. Surface Depth

26 26″ deep

Step 4. Surface Width

45 45″ wide

Step 5. Surface Material

L high-pressure laminate top/thermoplastic edge

W veneer top/veneer edge A

A high-pressure laminate top/thermoplastic edge with MicrobeCare™ A

Step 6. Liner Options

C center liner, no side liners

L center liner and two side liners

N no center liner, no side liners

Prices for Steps 1-6.

	LC	LL	LN	WC	WL	WN
HZ570S. 26 45	$3359	3988	3054	4357	4985	4051

	AC	AL	AN
HZ570S. 26 45	$3443	4073	3138

Step 7. Power Access Cutout

NC	no cutout	+$0
CC	center cutout for Logic Mini - Y1414 and Y1412.1	+$65

Step 8. Screen Finish

Metallic Paint

CN	metallic champagne	+$0
MS	metallic silver	+$0
SNA	satin aluminum	+$60
SNB	satin bronze	+$60
SNC	satin carbon	+$60

Sand Texture Paint		
8Q	folkstone grey	+$0
91	white	+$0
98	studio white	+$0
BK	black	+$0
DB3	glacier	+$50
DN2	nightfall	+$50
DR1	canyon	+$50
G1	graphite	+$0
OLF	olive	+$50
WL	sandstone	+$0

Step 9. Liner Fabric

For center liner, no side liners (C) or center liner and two side liners (L)

Price Category 4 +$0

Step 10.

Top Finish		
For high-pressure laminate top/thermoplastic edge (L) or high-pressure laminate top/thermoplastic edge with MicrobeCare™ (A)		
76	light brown walnut	+$0
8Q	folkstone grey	+$0
91	white	+$0
98	studio white	+$0
CL	cool grey neutral	+$0
HF	inner tone light	+$0
HM	natural maple	+$0
HP	light anigre	+$0
HX	aged cherry	+$0
LBA	clear on ash	+$0
LBB	oak on ash	+$0
LBC	walnut on ash	+$0
LBF	neutral twill	+$0
LBJ	graphite twill	+$0
LBQ	white twill	+$0
LBR	phantom ecru A	+$0
LBS	phantom cocoa A	+$0
LBU	medium matte walnut A	+$0
LBV	warm grey teak A	+$0
LT	light tone	+$0
LU	soft white	+$0
WL	sandstone	+$0
WN	warm grey neutral	+$0

Top/Edge Finish		
For veneer top/veneer edge (W)		
2U	light brown walnut A	+$85
40	dark brown walnut A	+$85
CHD	noble cherry	+$85
ET	clear on ash A	+$85
EU	oak on ash A	+$85
EV	walnut on ash A	+$85
EW	medium matte walnut A	+$85
OK	white oak (nonstandard) A	+$85
UL	natural maple A	+$85
WHN	natural white oak	+$85

Step 11. Edge Finish

For high-pressure laminate top/thermoplastic edge (L) or high-pressure laminate top/thermoplastic edge with MicrobeCare™ (A)

76	light brown walnut	+$0
8Q	folkstone grey	+$0
91	white	+$0
98	studio white	+$0
BU	black umber	+$0
CL	cool grey neutral	+$0
HF	inner tone light	+$0
HM	natural maple	+$0
HP	light anigre	+$0
HX	aged cherry	+$0
LBA	clear on ash	+$0
LBB	oak on ash	+$0
LBC	walnut on ash	+$0
LBF	neutral twill	+$0
LBJ	graphite twill	+$0
LBQ	white twill	+$0
LBR	phantom ecru	+$0
LBS	phantom cocoa	+$0
LBU	medium matte walnut	+$0
LBV	warm grey teak	+$0
LU	soft white	+$0
WL	sandstone	+$0

Step 12. Leg Finish

Metallic Paint		
CN	metallic champagne	+$0
MS	metallic silver	+$0
SNA	satin aluminum	+$135
SNB	satin bronze	+$135
SNC	satin carbon	+$135

Sand Texture Paint		
8Q	folkstone grey	+$0
91	white	+$0
98	studio white	+$0
BK	black	+$0
G1	graphite	+$0
WL	sandstone	+$0
DB3	glacier	+$125
DN2	nightfall	+$125
DR1	canyon	+$125
OLF	olive	+$125

Step 13. Base Type		
C	casters	+$0
G	glides	+$0

OE1 Nook Liner HZ575.

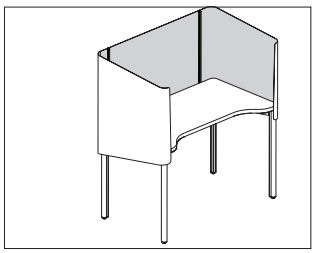

Product Information

Description

This liner retrofits to the OE1 Workspace Collection™ Nook. It is user movable without tools.

Notes

Liner is compatible with the OE1 Nook (HZ570).

Dimensions

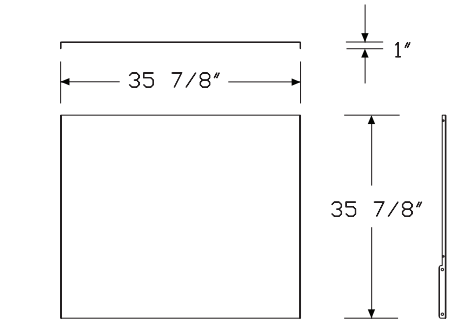

Centre Liner

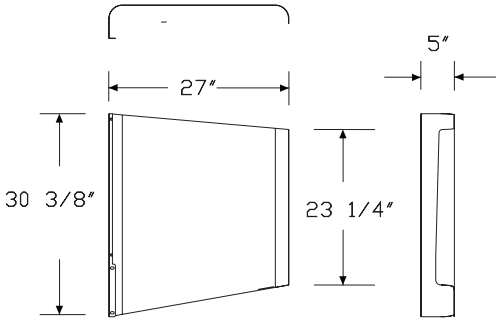

Right Liner

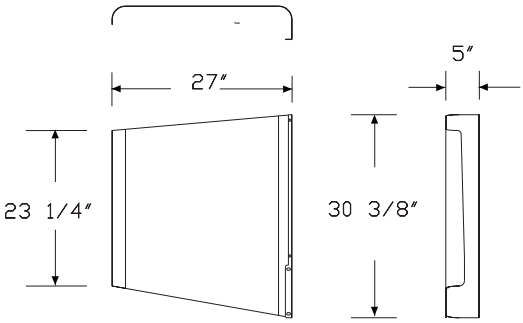

Left Liner

Specification Information	
Step 1.	
HZ575.	

Step 2. Liner Options	
C	center liner, no side liners
L	center liner and two side liners
S	two side liners, no center liner

Prices for Steps 1-2.		
HZ575.	**C**	$389
	L	$1037
	S	$648

Step 3. Finish	
Price Category 4	+$0

OE1 Huddle Table HZ580S

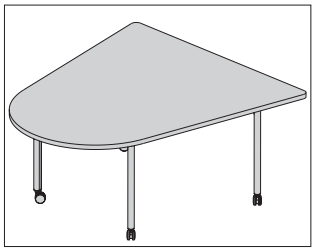

Product Information

Description

This OE1 Workspace Collection™ seated-height Huddle Table has a laminate top with thermoplastic edge, or veneer top and edge. Laminate and veneer surfaces are 1¼″ thick. Available with cutouts to accommodate Herman Miller power options that are ordered separately. Table comes with 1½″ leveling glides or casters.

Dimensions

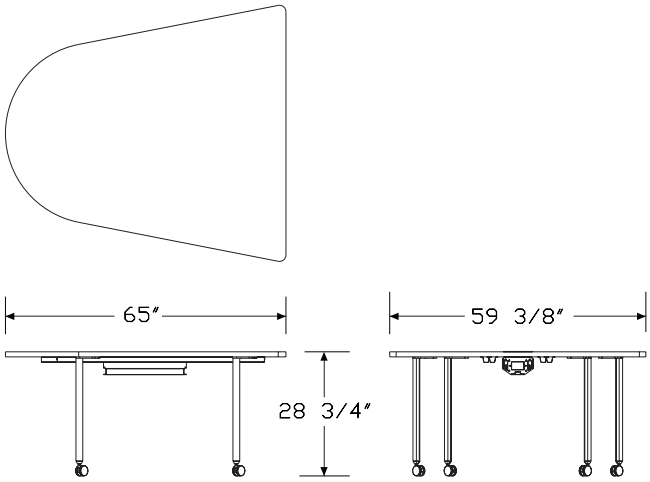

Specification Information

Step 1.

HZ580

Step 2. Edge

S. squared-edge

Step 3. Depth

60 60″ deep

Step 4. Width

65 65″ wide

Step 5. Surface Material

L high-pressure laminate top/thermoplastic edge

W veneer top/veneer edge A

A high-pressure laminate top/thermoplastic edge with MicrobeCare™ A

Prices for Steps 1-5.

	L	W	A
HZ580S. 60 65	$2189	4267	2287

Step 6. Power Access Cutout

NC	no cutout	+$0
C5	off-center cutout for logic mini (square) Y14xx and Y1412	+$65
L3	one center cutout for logic Y1425 3 port	+$65
L5	one center cutout for logic Y1425 5 port	+$65
L6	one center cutout for logic Y1425 6 port	+$65
TB	one center cutout for technology bucket	+$190

Step 7.

Top Finish

For high-pressure laminate top/thermoplastic edge (L) or high-pressure laminate top/thermoplastic edge with MicrobeCare™ (A)

76	light brown walnut	+$0
8Q	folkstone grey	+$0
91	white	+$0
98	studio white	+$0
CL	cool grey neutral	+$0
HF	inner tone light	+$0
HM	natural maple	+$0
HP	light anigre	+$0
HX	aged cherry	+$0
LBA	clear on ash	+$0
LBB	oak on ash	+$0
LBC	walnut on ash	+$0
LBF	neutral twill	+$0
LBJ	graphite twill	+$0
LBQ	white twill	+$0
LBR	phantom ecru A	+$0
LBS	phantom cocoa A	+$0
LBU	medium matte walnut A	+$0
LBV	warm grey teak A	+$0
LT	light tone	+$0
LU	soft white	+$0
WL	sandstone	+$0
WN	warm grey neutral	+$0

Top/Edge Finish

For veneer top/veneer edge (W)

2U	light brown walnut A	+$85
40	dark brown walnut A	+$85
CHD	noble cherry	+$85
ET	clear on ash A	+$85
EU	oak on ash A	+$85
EV	walnut on ash A	+$85
EW	medium matte walnut A	+$85
OK	white oak (nonstandard) A	+$85
UL	natural maple A	+$85
WHN	natural white oak	+$85

Step 8. Edge Finish

For high-pressure laminate top/thermoplastic edge (L) or high-pressure laminate top/thermoplastic edge with MicrobeCare™ (A)

76	light brown walnut	+$0
8Q	folkstone grey	+$0
91	white	+$0
98	studio white	+$0
BU	black umber	+$0
CL	cool grey neutral	+$0
HF	inner tone light	+$0
HM	natural maple	+$0
HP	light anigre	+$0
HX	aged cherry	+$0
LBA	clear on ash	+$0
LBB	oak on ash	+$0
LBC	walnut on ash	+$0
LBF	neutral twill	+$0
LBJ	graphite twill	+$0
LBQ	white twill	+$0
LBR	phantom ecru	+$0
LBS	phantom cocoa	+$0
LBU	medium matte walnut	+$0
LBV	warm grey teak	+$0
LU	soft white	+$0
WL	sandstone	+$0

Step 9. Leg Finish

Metallic Paint

CN	metallic champagne	+$0
MS	metallic silver	+$0
SNA	satin aluminum	+$135
SNB	satin bronze	+$135
SNC	satin carbon	+$135

Sand Texture Paint

8Q	folkstone grey	+$0
91	white	+$0
98	studio white	+$0
BK	black	+$0
G1	graphite	+$0
WL	sandstone	+$0
DB3	glacier	+$125
DN2	nightfall	+$125
DR1	canyon	+$125
OLF	olive	+$125

Step 10. Base Type		
C	casters	+$0
G	glides	+$0

OE1 Power Entry, Internal Direct Connect HZ700.

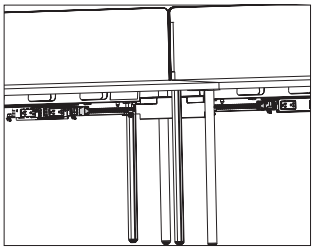

Product Information

Description

This power entry connects a building's electrical from a wall, floor, or column to the end of a 4-circuit junction block and distributes up to 4 20-amp circuits. UL Listed for use with OE1 Workspace Collection™ in the US and Canada.

Notes

OE1 modular power products are only compatible with other OE1 modular products.

Power entry can be field cut to the appropriate length.

Finish color on liquid tight conduit is black.

To manage and/or cover power entry, order power entry cover (HZ720.) separately.

A licensed electrician must wire the power entry to the building's electrical system.

Dimensions

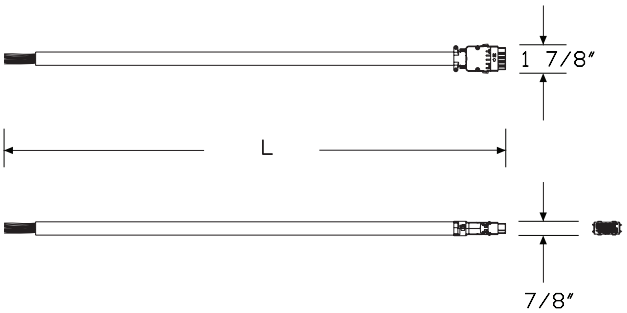

Specification Information

Step 1.

HZ700.

Step 2. Configuration

08	8-wire, 4 circuit, shared neutral
10	10-wire, 4-circuit, separate neutrals

Step 3. Entry Length

06	6′ long
12	12′ long
18	18′ long

Prices for Steps 1-3.

		06	12	18
HZ700.	**08**	$266	378	455
	10	$266	378	455

OE1 Power Entry, New York HZ710.

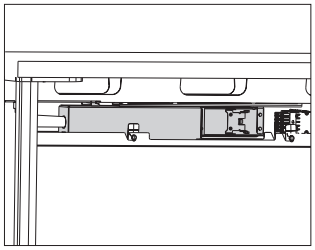

Product Information

Description

This power entry connects a building's electrical from a wall, floor, or column to the end of a 4-circuit junction block and distributes up to 4 20-amp circuits. UL Listed for use with OE1 Workspace Collection™ in the US and Canada.

Notes

OE1 modular power products are only compatible with other OE1 modular products.

A licensed electrician must wire the power entry to the building's electrical system.

Dimensions

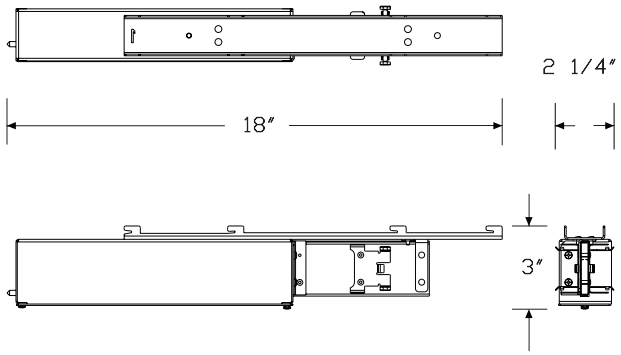

Specification Information

Step 1.

HZ710.

Step 2. Configuration

08	8-wire, 4 circuit, shared neutral
10	10-wire, 4-circuit, separate neutrals

Prices for Steps 1-2.

HZ710.	**08**	$454
	10	$454

OE1 Power Entry Cover HZ720.

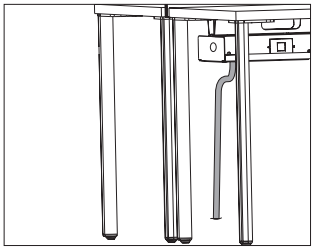

Product Information

Description

This mesh cover manages cables and covers the power entry. Attachment hardware included.

Notes

OE1 modular power products are only compatible with other OE1 modular products.

Dimensions

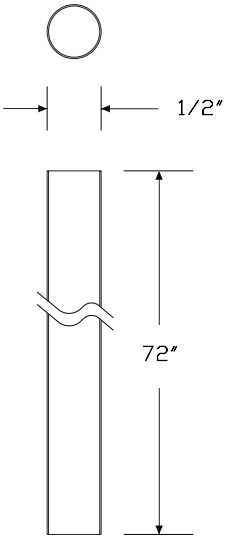

Specification Information

Step 1.

HZ720.

Step 2. Length

72	72″ long

Step 3. Attachment

B	for use with accessory bridge

Prices for Steps 1-3.

	B
HZ720. 72	$171

Step 4. Finish

BK	black	+$0

OE1 Power Harness HZ730.

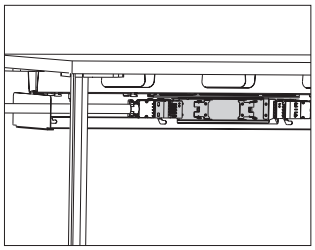

Product Information

Description

This power harness holds up to 4 receptacles.

Notes

1 harness can hold 4 receptacles, 2 on each side.

OE1 modular power products are only compatible with other OE1 modular products.

Dimensions

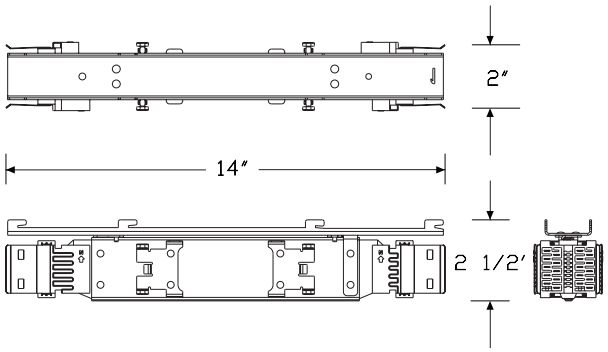

Specification Information

Step 1.

HZ730.

Step 2. Configuration

08	8-wire, 4 circuit, shared neutral
10	10-wire, 4-circuit, separate neutrals

Prices for Steps 1-2.

HZ730.	**08**	$186
	10	$186

OE1 Power Jumper HZ740.

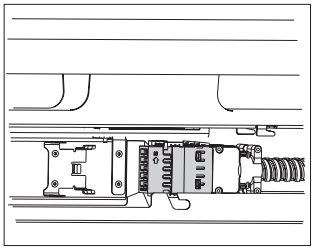

Product Information

Description

This power jumper distributes up to 4 20-amp circuits between 2 junction boxes. UL Listed for use with OE1 Workspace Collection™ in the US and Canada.

Notes

OE1 modular power products are only compatible with other OE1 modular products.

Dimensions

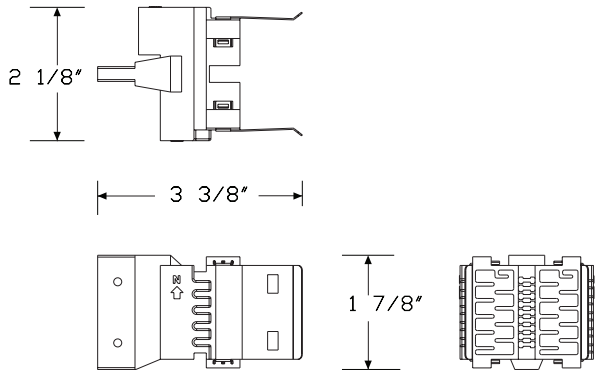

Specification Information

Step 1.

HZ740.

Step 2. Configuration

08	8-wire, 4 circuit, shared neutral
10	10-wire, 4-circuit, separate neutrals

Step 3. Width

42	42″ wide
48	48″ wide
54	54″ wide
60	60″ wide
66	66″ wide
72	72″ wide

Prices for Steps 1-3.

		42	48	54	60	66	72
HZ740.	**08**	$131	138	145	158	164	171
	10	$131	138	145	158	164	171

OE1 Receptacle, 4-Circuit, 15 Amp (Package of 4) HZ750.

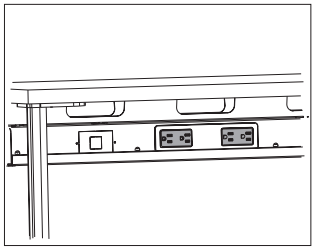

Product Information

Description

This 15-amp receptacle locks into the power harness. It is UL Listed and Canadian UL Listed. Package contains 4 receptacles.

Notes

OE1 modular power products are only compatible with other OE1 modular products.

Dimensions

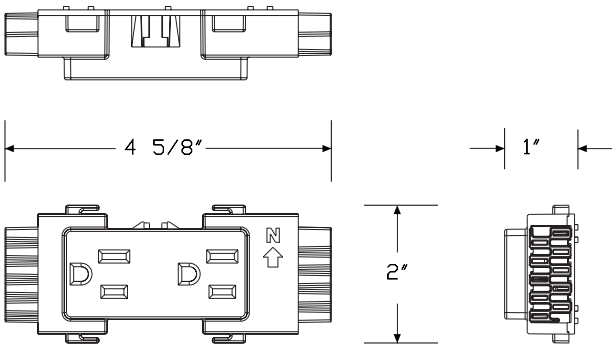

Specification Information

Step 1.

HZ750.

Step 2. Configuration

AN	8-wire duplex, shared neutral, circuit a
BN	8-wire duplex, shared neutral, circuit b
CN	8-wire duplex, shared neutral, circuit c
DN	8-wire duplex, shared neutral, circuit d
AG	8-wire duplex, shared neutral, circuit a, isolated ground
BG	8-wire duplex, shared neutral, circuit b, isolated ground
CG	8-wire duplex, shared neutral, circuit c, isolated ground
DG	8-wire duplex, shared neutral, circuit d, isolated ground
1N	10-wire duplex, independent neutral, circuit 1
2N	10-wire duplex, independent neutral, circuit 2
3N	10-wire duplex, independent neutral, circuit 3
4N	10-wire duplex, independent neutral, circuit 4
1G	10-wire duplex, independent neutral, circuit 1, isolated ground
2G	10-wire duplex, independent neutral, circuit 2, isolated ground
3G	10-wire duplex, independent neutral, circuit 3, isolated ground
4G	10-wire duplex, independent neutral, circuit 4, isolated ground

Prices for Steps 1-2.

HZ750.	**AN**	$154
	BN	$154
	CN	$154
	DN	$154
	AG	$154
	BG	$154
	CG	$154
	DG	$154
	1N	$154
	2N	$154
	3N	$154
	4N	$154
	1G	$154
	2G	$154
	3G	$154
	4G	$154

Step 3. Finish

BK	black	+$0

OE1 Controlled Receptacle, 4-Circuit, 15 Amp (Package of 4) HZ760.

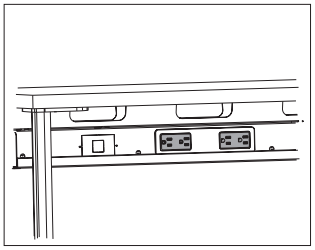

Product Information

Description

A controlled receptacle should be used for any receptacle that is under automated control by the energy management system. This 15-amp receptacle locks into the power harness. It is UL Listed and Canadian UL Listed. Package contains 4 receptacles.

Notes

This receptacle does not have any built-in control. It just has the controlled labeling. Receptacle must be controlled by some other means.

Receptacle depth is 1".

OE1 modular power products are only compatible with other OE1 modular products.

Dimensions

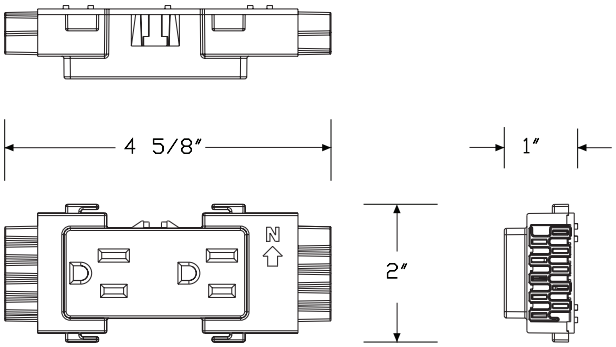

Specification Information

Step 1.

HZ760.

Step 2. Configuration

AN	8-wire duplex, shared neutral, circuit a
BN	8-wire duplex, shared neutral, circuit b
CN	8-wire duplex, shared neutral, circuit c
DN	8-wire duplex, shared neutral, circuit d
AG	8-wire duplex, shared neutral, circuit a, isolated ground
BG	8-wire duplex, shared neutral, circuit b, isolated ground
CG	8-wire duplex, shared neutral, circuit c, isolated ground
DG	8-wire duplex, shared neutral, circuit d, isolated ground
1N	10-wire duplex, independent neutral, circuit 1
2N	10-wire duplex, independent neutral, circuit 2
3N	10-wire duplex, independent neutral, circuit 3
4N	10-wire duplex, independent neutral, circuit 4
1G	10-wire duplex, independent neutral, circuit 1, isolated ground
2G	10-wire duplex, independent neutral, circuit 2, isolated ground
3G	10-wire duplex, independent neutral, circuit 3, isolated ground
4G	10-wire duplex, independent neutral, circuit 4, isolated ground

Prices for Steps 1-2.

HZ760.	**AN**	$154
	BN	$154
	CN	$154
	DN	$154
	AG	$154
	BG	$154
	CG	$154
	DG	$154
	1N	$154
	2N	$154
	3N	$154
	4N	$154
	1G	$154
	2G	$154
	3G	$154
	4G	$154

Step 3. Finish

BK	black	+$0

OE1 Receptacle, 20 Amp HZ770.

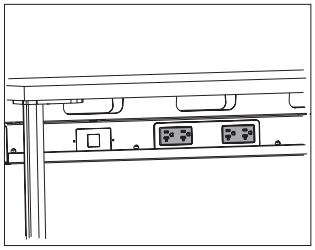

Product Information

Description

This 20-amp receptacle locks into the power harness. It provides power to equipment with a 20-amp standard plug head or cap. It also accepts 15-amp standard plug heads or caps. It is UL Listed and Canadian UL Listed. Package contains 1 receptacle.

Notes

Avoid overloading circuit by ensuring total connected load does not exceed 16 amps. If 1 piece of equipment requires all available power, do not use receptacle's second outlet or install additional receptacles on that circuit. In many cases, equipment requiring this receptacle will use all available power.

Receptacle depth is 1¼".

OE1 modular power products are only compatible with other OE1 modular products.

Dimensions

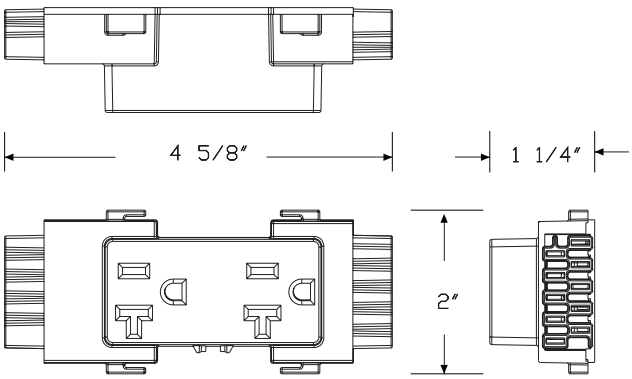

Specification Information

Step 1.

HZ770.

Step 2. Configuration

AN	8-wire duplex, shared neutral, circuit a
BN	8-wire duplex, shared neutral, circuit b
AG	8-wire duplex, shared neutral, circuit a, isolated ground
BG	8-wire duplex, shared neutral, circuit b, isolated ground
1N	10-wire duplex, independent neutral, circuit 1
2N	10-wire duplex, independent neutral, circuit 2
1G	10-wire duplex, independent neutral, circuit 1, isolated ground
2G	10-wire duplex, independent neutral, circuit 2, isolated ground

Prices for Steps 1-2.

HZ770.	**AN**	$60
	BN	$60
	AG	$60
	BG	$60
	1N	$60
	2N	$60
	1G	$60
	2G	$60

Step 3. Finish

BK	black	+$0

OE1 Controlled Receptacle, 20 Amp HZ780.

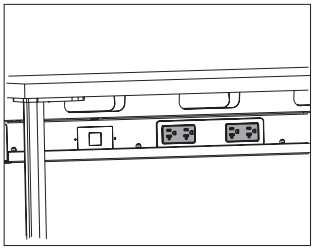

Product Information

Description

A controlled receptacle should be used for any receptacle that is under automated control by the energy management system. This 20-amp receptacle locks into the power harness. It provides power to equipment with a 20-amp standard plug head or cap. It also accepts 15-amp standard plug heads or caps. It is UL Listed and Canadian UL Listed. Package contains 1 receptacle.

Notes

Avoid overloading circuit by ensuring total connected load does not exceed 16 amps. If 1 piece of equipment requires all available power, do not use receptacle's second outlet or install additional receptacles on that circuit. In many cases, equipment requiring this receptacle will use all available power.

This receptacle does not have any built-in control. It just has the controlled labeling. Receptacle must be controlled by some other means.

Receptacle depth is 1¼".

OE1 modular power products are only compatible with other OE1 modular products.

Dimensions

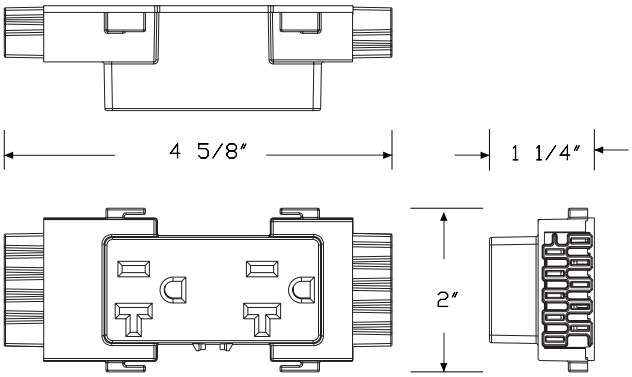

Specification Information

Step 1.

HZ780.

Step 2. Configuration

AN	8-wire duplex, shared neutral, circuit a
BN	8-wire duplex, shared neutral, circuit b
AG	8-wire duplex, shared neutral, circuit a, isolated ground
BG	8-wire duplex, shared neutral, circuit b, isolated ground
1N	10-wire duplex, independent neutral, circuit 1
2N	10-wire duplex, independent neutral, circuit 2
1G	10-wire duplex, independent neutral, circuit 1, isolated ground
2G	10-wire duplex, independent neutral, circuit 2, isolated ground

Prices for Steps 1-2.

HZ780.	**AN**	$60
	BN	$60
	AG	$60
	BG	$60
	1N	$60
	2N	$60
	1G	$60
	2G	$60

Step 3. Finish

BK	black	+$0

OE1 Movable Screen, Pari Y1141.

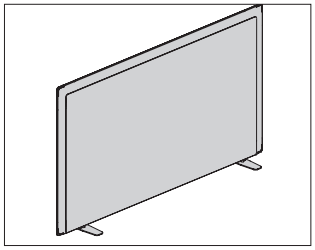

Product Information

Description

This movable, tackable screen sits on top of work surfaces to extend the overall height and provide boundary and privacy on tables, benches and systems products. It has a frameless all-fabric design and is freestanding. Base finish available in folkstone grey or black.

Notes

Datum heights reflect placement on 29″-high fixed-height work surface and align with Canvas datum lines. Screen can be used on fixed, level work surface.

Specify width of screen to match width of work surface.

Screen heights are nominal. Actual screen heights are: 12½″ (14), 16½″ (18), and 23½″ (25).

Screen accepts Customer's Own Material (COM). Yardage is estimated for directional, 54″ wide fabrics.

For vertical fabric direction (T, E):

Height—Yardage

14—1.17

18—1.42

25—1.83

For horizontal fabric direction (R, D):

Width—Yardage

42—1.51

48—1.70

54—1.89

60—2.08

66—2.27

72—2.46

For information on multiple quantities or directional fabrics, contact COM Department. See Order Information in appendices.

Dimensions

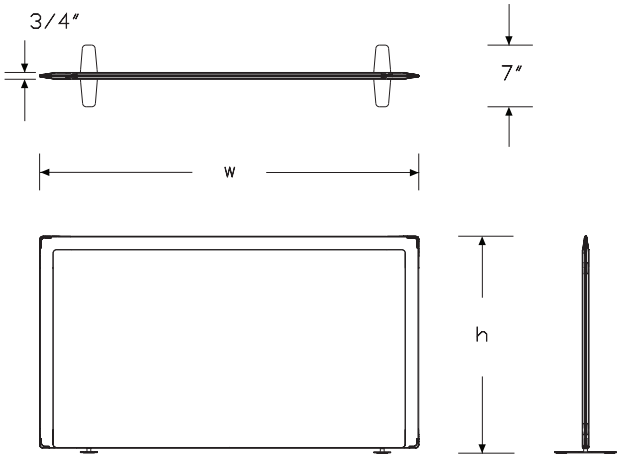

Specification Information

Step 1.

Y1141.

Step 2. Height

14	14″ high (to reach 42″ datum)
18	18″ high (to reach 46″ datum)
25	25″ high (to reach 53″ datum)

Step 3. Width

42	42″ wide
48	48″ wide
54	54″ wide
60	60″ wide
66	66″ wide
72	72″ wide

Step 4. Surface Material

For 42" wide (42) or 48" wide (48)

D	tackable fabric, horizontal with MicrobeCare™
E	tackable fabric with MicrobeCare™
R	tackable fabric, horizontal
T	tackable fabric

For 54" wide (54), 60" wide (60), 66" wide (66), or 72" wide (72)

D	tackable fabric, horizontal with MicrobeCare™
R	tackable fabric, horizontal

Prices for Steps 1-4.

		D	E	R	T
Y1141. 14	**42**	$775	775	710	710
	48	$800	800	734	734
	54	$823	—	759	—
	60	$848	—	784	—
	66	$887	—	821	—
	72	$936	—	871	—
18	**42**	$936	936	871	871
	48	$960	960	896	896
	54	$985	—	921	—
	60	$1011	—	946	—
	66	$1047	—	982	—
	72	$1096	—	1030	—
25	**42**	$1064	1064	1000	1000
	48	$1088	1088	1024	1024
	54	$1114	—	1049	—
	60	$1139	—	1074	—
	66	$1175	—	1110	—
	72	$1224	—	1160	—

Step 5. Base Finish

8Q	folkstone grey	+$0
BK	black	+$0

Step 6. Fabric

For 14" high (to reach 42" datum) (14) with 42" wide (42)

Price Category 1	+$0
Price Category 2	+$36
Price Category 3	+$86
Price Category 4	+$155
Price Category 5	+$263
Price Category B	+$149
Price Category C	+$203
Price Category E	+$305

For 14" high (to reach 42" datum) (14) with 48" wide (48)

Price Category 1	+$0
Price Category 2	+$41
Price Category 3	+$98
Price Category 4	+$174
Price Category 5	+$296
Price Category B	+$169
Price Category C	+$228
Price Category E	+$344

For 18" high (to reach 46" datum) (18) or 25" high (to reach 53" datum) (25) with 42" wide (42)

Price Category 1	+$0
Price Category 2	+$36
Price Category 3	+$86
Price Category 4	+$155
Price Category 5	+$263
Price Category B	+$149
Price Category C	+$203
Price Category E	+$305

For 18" high (to reach 46" datum) (18) or 25" high (to reach 53" datum) (25) with 48" wide (48)	
Price Category 1	+$0
Price Category 2	+$41
Price Category 3	+$98
Price Category 4	+$174
Price Category 5	+$296
Price Category B	+$169
Price Category C	+$228
Price Category E	+$344

For 14" high (to reach 42" datum) (14) with 54" wide (54)	
Price Category 1	+$0
Price Category 2	+$48
Price Category 3	+$115
Price Category 4	+$204
Price Category 5	+$347
Price Category B	+$197
Price Category C	+$266
Price Category E	+$403

For 14" high (to reach 42" datum) (14) with 60" wide (60)	
Price Category 1	+$0
Price Category 2	+$52
Price Category 3	+$126
Price Category 4	+$224
Price Category 5	+$382
Price Category B	+$217
Price Category C	+$294
Price Category E	+$444

For 14" high (to reach 42" datum) (14) with 66" wide (66)	
Price Category 1	+$0
Price Category 2	+$56
Price Category 3	+$138
Price Category 4	+$245
Price Category 5	+$418
Price Category B	+$236
Price Category C	+$320
Price Category E	+$484

For 14" high (to reach 42" datum) (14) with 72" wide (72)	
Price Category 1	+$0
Price Category 2	+$61
Price Category 3	+$149
Price Category 4	+$265
Price Category 5	+$451
Price Category B	+$256
Price Category C	+$347
Price Category E	+$523

For 18" high (to reach 46" datum) (18) or 25" high (to reach 53" datum) (25) with 54" wide (54)	
Price Category 1	+$0
Price Category 2	+$48
Price Category 3	+$115
Price Category 4	+$204
Price Category 5	+$347
Price Category B	+$197
Price Category C	+$266
Price Category E	+$403

For 18" high (to reach 46" datum) (18) or 25" high (to reach 53" datum) (25) with 60" wide (60)	
Price Category 1	+$0
Price Category 2	+$52
Price Category 3	+$126
Price Category 4	+$224
Price Category 5	+$382
Price Category B	+$217
Price Category C	+$294
Price Category E	+$444

For 18" high (to reach 46" datum) (18) or 25" high (to reach 53" datum) (25) with 66" wide (66)	
Price Category 1	+$0
Price Category 2	+$56
Price Category 3	+$138
Price Category 4	+$245
Price Category 5	+$418
Price Category B	+$236
Price Category C	+$320
Price Category E	+$484

For 18" high (to reach 46" datum) (18) or 25" high (to reach 53" datum) (25) with 72" wide (72)	
Price Category 1	+$0
Price Category 2	+$61
Price Category 3	+$149
Price Category 4	+$265
Price Category 5	+$451
Price Category B	+$256
Price Category C	+$347
Price Category E	+$523

OE1 Movable Screen, Flat Edge Y1142.

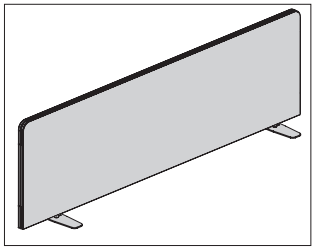

Product Information

Description

This movable, tackable screen sits on top of work surfaces to extend the overall height and provide boundary and privacy on tables, benches and systems products. It has a frameless all-fabric design with a flat edge and is freestanding. Base finish available in folkstone grey or black.

Notes

Datum heights reflect placement on 29"-high fixed-height work surface and align with Canvas datum lines. Screen can be used on fixed, level work surface.

Specify width of screen to match width of work surface.

Screen heights are nominal. Actual screen heights are: 12½" (14), 16½" (18), and 23½" (25).

Screen accepts Customer's Own Material (COM). Yardage is estimated for directional, 54" wide fabrics.

For vertical fabric direction (T, E):

Height—Yardage

14—1.17

18—1.42

25—1.83

For horizontal fabric direction (R, D):

Width—Yardage

42—1.51

48—1.70

54—1.89

60—2.08

66—2.27

72—2.46

For information on multiple quantities or directional fabrics, contact COM Department. See Order Information in appendices.

Dimensions

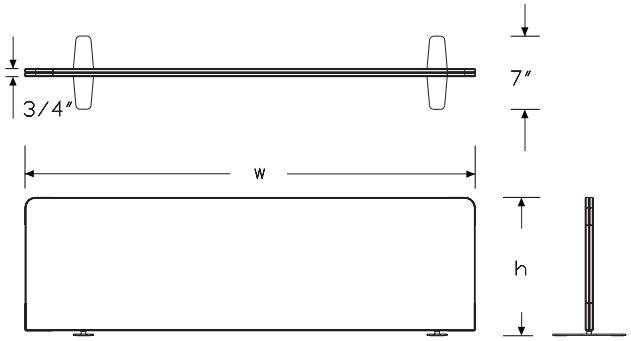

OE1 Movable Screen, Flat Edge

continued

Specification Information

Step 1.

Y1142.

Step 2. Height

14	14″ high (to reach 42″ datum)
18	18″ high (to reach 46″ datum)
25	25″ high (to reach 53″ datum)

Step 3. Width

42	42″ wide
48	48″ wide
54	54″ wide
60	60″ wide
66	66″ wide
72	72″ wide

Step 4. Surface Material

For 42" wide (42) or 48" wide (48)

D	tackable fabric, horizontal with MicrobeCare™
E	tackable fabric with MicrobeCare™
R	tackable fabric, horizontal
T	tackable fabric

For 54" wide (54), 60" wide (60), 66" wide (66), or 72" wide (72)

D	tackable fabric, horizontal with MicrobeCare™
R	tackable fabric, horizontal

Prices for Steps 1-4.

		D	E	R	T
Y1142. 14	**42**	$610	610	546	546
	48	$635	635	571	571
	54	$661	—	596	—
	60	$685	—	620	—
	66	$723	—	658	—
	72	$773	—	707	—
18	**42**	$734	734	669	669
	48	$759	759	695	695
	54	$784	—	719	—
	60	$809	—	744	—
	66	$846	—	781	—
	72	$896	—	832	—
25	**42**	$834	834	769	769
	48	$858	858	793	793
	54	$882	—	818	—
	60	$907	—	843	—
	66	$946	—	880	—
	72	$994	—	930	—

Step 5. Base Finish

8Q	folkstone grey	+$0
BK	black	+$0

Step 6. Fabric

For 14" high (to reach 42" datum) (14) with 42" wide (42)

Price Category 1	+$0
Price Category 2	+$36
Price Category 3	+$86
Price Category 4	+$155
Price Category 5	+$263
Price Category B	+$149
Price Category C	+$203
Price Category E	+$305

For 14" high (to reach 42" datum) (14) with 48" wide (48)

Price Category 1	+$0
Price Category 2	+$41
Price Category 3	+$98
Price Category 4	+$174
Price Category 5	+$296
Price Category B	+$169
Price Category C	+$228
Price Category E	+$344

For 18" high (to reach 46" datum) (18) or 25" high (to reach 53" datum) (25) with 42" wide (42)

Price Category 1	+$0
Price Category 2	+$36
Price Category 3	+$86
Price Category 4	+$155
Price Category 5	+$263
Price Category B	+$149
Price Category C	+$203
Price Category E	+$305

OE1 Movable Screen, Flat Edge

continued

For 18" high (to reach 46" datum) (18) or 25" high (to reach 53" datum) (25) with 48" wide (48)	
Price Category 1	+$0
Price Category 2	+$41
Price Category 3	+$98
Price Category 4	+$174
Price Category 5	+$296
Price Category B	+$169
Price Category C	+$228
Price Category E	+$344

For 14" high (to reach 42" datum) (14) with 54" wide (54)	
Price Category 1	+$0
Price Category 2	+$48
Price Category 3	+$115
Price Category 4	+$204
Price Category 5	+$347
Price Category B	+$197
Price Category C	+$266
Price Category E	+$403

For 14" high (to reach 42" datum) (14) with 60" wide (60)	
Price Category 1	+$0
Price Category 2	+$52
Price Category 3	+$126
Price Category 4	+$224
Price Category 5	+$382
Price Category B	+$217
Price Category C	+$294
Price Category E	+$444

For 14" high (to reach 42" datum) (14) with 66" wide (66)	
Price Category 1	+$0
Price Category 2	+$56
Price Category 3	+$138
Price Category 4	+$245
Price Category 5	+$418
Price Category B	+$236
Price Category C	+$320
Price Category E	+$484

For 14" high (to reach 42" datum) (14) with 72" wide (72)	
Price Category 1	+$0
Price Category 2	+$61
Price Category 3	+$149
Price Category 4	+$265
Price Category 5	+$451
Price Category B	+$256
Price Category C	+$347
Price Category E	+$523

For 18" high (to reach 46" datum) (18) or 25" high (to reach 53" datum) (25) with 54" wide (54)	
Price Category 1	+$0
Price Category 2	+$48
Price Category 3	+$115
Price Category 4	+$204
Price Category 5	+$347
Price Category B	+$197
Price Category C	+$266
Price Category E	+$403

For 18" high (to reach 46" datum) (18) or 25" high (to reach 53" datum) (25) with 60" wide (60)	
Price Category 1	+$0
Price Category 2	+$52
Price Category 3	+$126
Price Category 4	+$224
Price Category 5	+$382
Price Category B	+$217
Price Category C	+$294
Price Category E	+$444

For 18" high (to reach 46" datum) (18) or 25" high (to reach 53" datum) (25) with 66" wide (66)	
Price Category 1	+$0
Price Category 2	+$56
Price Category 3	+$138
Price Category 4	+$245
Price Category 5	+$418
Price Category B	+$236
Price Category C	+$320
Price Category E	+$484

OE1 Movable Screen, Flat Edge

continued

For 18" high (to reach 46" datum) (18) or 25" high (to reach 53" datum) (25) with 72" wide (72)	
Price Category 1	+$0
Price Category 2	+$61
Price Category 3	+$149
Price Category 4	+$265
Price Category 5	+$451
Price Category B	+$256
Price Category C	+$347
Price Category E	+$523

OE1 Metal Boundary Screen Y1143.

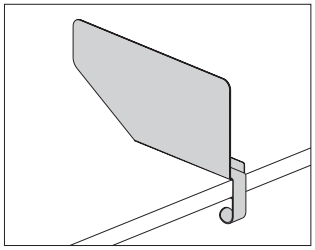

Product Information

Description

This metal screen attaches to the front of a work surface to provide division and boundary between workers. Steel construction allows for attachment of magnets and Ubi name tag. Screen available with liner in choice of colors. Attachment thumb screw included.

Notes

Screen attaches to square edge surfaces with minimum 1″ up to 1½″ nominal thickness.

Screen height is nominal. Actual screen height is 8.7″.

Liner is available on flange side (righthand side when attached to work surface) only.

Screen provides boundary on rectangular surface work tables where the legs are positioned under the worksurface by 3½″.

Order the following accessories separately:

- Ubi name tag (YT410.)
- Rare earth magnets (Y7234.)

Screen is recommended for use on the OE1 communal tables (single and double sided), OE1 rectangular tables, Renew™ Link single-sided and back-to-back rectangular height-adjustable benches (DU1A, DU2A), and on any other benching or table surface with appropriate thickness requirement and that use rectangular work surfaces. It is not recommended for use on Renew Link back-to-back trapezoid height-adjustable bench (DU2T).

Dimensions

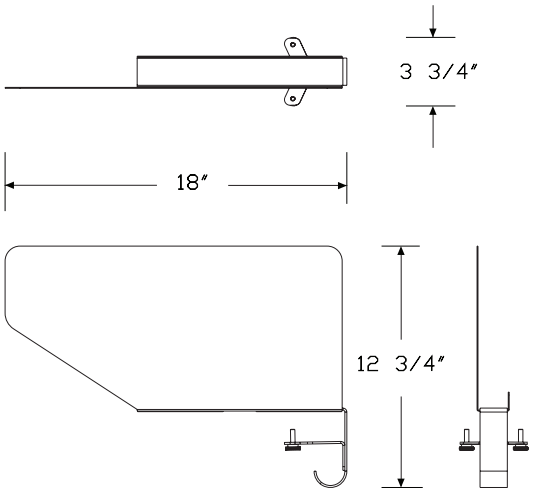

Specification Information

Step 1.

Y1143.

Step 2. Height

9	9″ high

Step 3. Depth

18	18″ deep

Prices for Steps 1-3.

	18
Y1143. 9	$199

Step 4. Liner

N	no liner	+$0
L	liner (flange side only)	+$70

Step 5. Liner Fabric

For liner (flange side only) (L)

Price Category 4	+$0

Step 6. Finish

Metallic Paint

CN	metallic champagne	+$0
MS	metallic silver	+$0
SNA	satin aluminum	+$10
SNB	satin bronze	+$10
SNC	satin carbon	+$10

Sand Texture Paint

8Q	folkstone grey	+$0
91	white	+$0
98	studio white	+$0
BK	black	+$0
G1	graphite	+$0
WL	sandstone	+$0
DB3	glacier	+$8
DN2	nightfall	+$8
DR1	canyon	+$8
OLF	olive	+$8

OE1 Freestanding Storage Trolley, Individual HZ800.

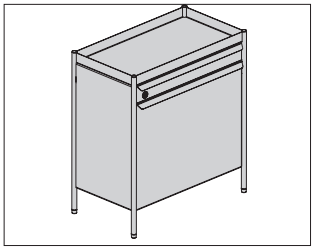

Product Information

Description

This individual OE1 Workspace Collection™ Freestanding Storage Trolley is painted metal and comes on glides. It provides 3 configurations of a top shelf/bottom shelf, top drawer/bottom shelf, or top drawer/bottom tip-out bin. Options include a lock and file divider.

Notes

Drawer contains full-extension slides. Tip-out bin (DT) with filing (F) option accommodates front-to-back filing.

Filing option (F) includes a rail to hang files and a divider. Divider color matches storage unit color.

Order optional accessories separately:

- OE1 storage liner (HZ840.)
- OE1 cushion top (HZ850.)
- OE1 bag hook (HZ870.)
- OE1 file divider add-on (HZ880.)
- OE1 storage organizer (HZ860.)

For keyed-alike locks, order lock plugs separately. See Keyed-Alike Information in appendices.

See planning guide for additional information.

Dimensions

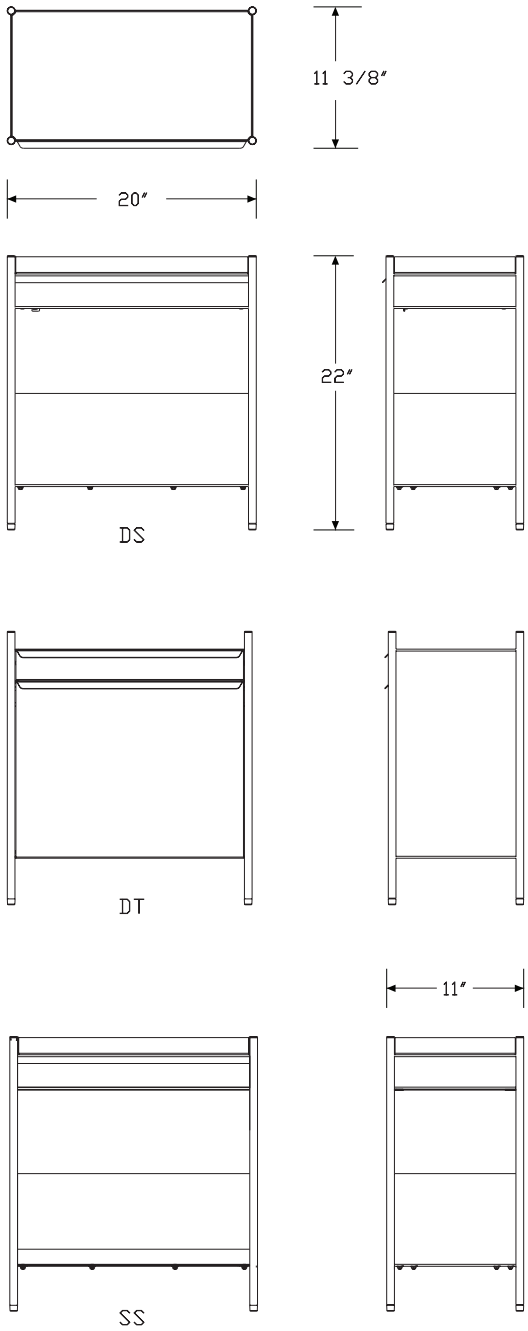

OE1 Freestanding Storage
Trolley, Individual *continued*

Specification Information

Step 1.

HZ800.

Step 2. Width

20	20″ wide

Step 3. Depth

11	11″ deep

Step 4. Configuration

SS	top shelf/bottom shelf
DS	top drawer/bottom shelf
DT	top drawer/bottom tip-out bin

Step 5. Lock

For top shelf/bottom shelf (SS)

N	no lock

For top drawer/bottom shelf (DS) or top drawer/bottom tip-out bin (DT)

L	lock
N	no lock

Step 6. Interior Option

For top drawer/bottom tip-out bin (DT)

F	filing option
N	no interior option

For top shelf/bottom shelf (SS) or top drawer/bottom shelf (DS)

N	no interior option

Prices for Steps 1-6.

	SSNN	DSLN	DSNN	DTLF	DTLN	DTNF
HZ800. 20 11	$891	1072	997	1470	1383	1397

	DTNN
HZ800. 20 11	$1310

Step 7. Finish

Metallic Paint

CN	metallic champagne	+$0
MS	metallic silver	+$0
SNA	satin aluminum	+$30
SNB	satin bronze	+$30
SNC	satin carbon	+$30

Sand Texture Paint

8Q	folkstone grey	+$0
91	white	+$0
98	studio white	+$0
BK	black	+$0
G1	graphite	+$0
WL	sandstone	+$0
DB3	glacier	+$20
DN2	nightfall	+$20
DR1	canyon	+$20
OLF	olive	+$20

Step 8. Lock Option

For lock (L)

KA	keyed alike, black	+$0
KQ	keyed alike, chrome	+$0
KD	keyed differently, black	+$0
KC	keyed differently, chrome	+$0

OE1 Mobile Storage Trolley, Individual HZ820.

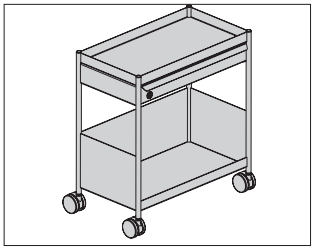

Product Information

Description

This individual OE1 Workspace Collection™ Mobile Storage Trolley is painted metal and comes on casters. It provides 3 configurations of a top shelf/bottom shelf, top drawer/bottom shelf, or top drawer/bottom tip-out bin. Options include a lock and file divider.

Notes

Drawer contains full-extension slides. Tip-out bin (DT) with filing (F) option accommodates front-to-back filing.

Divider color matches storage unit color.

Order optional accessories separately:

- OE1 storage liner (HZ840.)
- OE1 cushion top (HZ850.)
- OE1 bag hook (HZ870.)
- OE1 file divider add-on (HZ880.)
- OE1 storage organizer (HZ860.)

For keyed-alike locks, order lock plugs separately. See Keyed-Alike Information in appendices.

See planning guide for additional information.

Dimensions

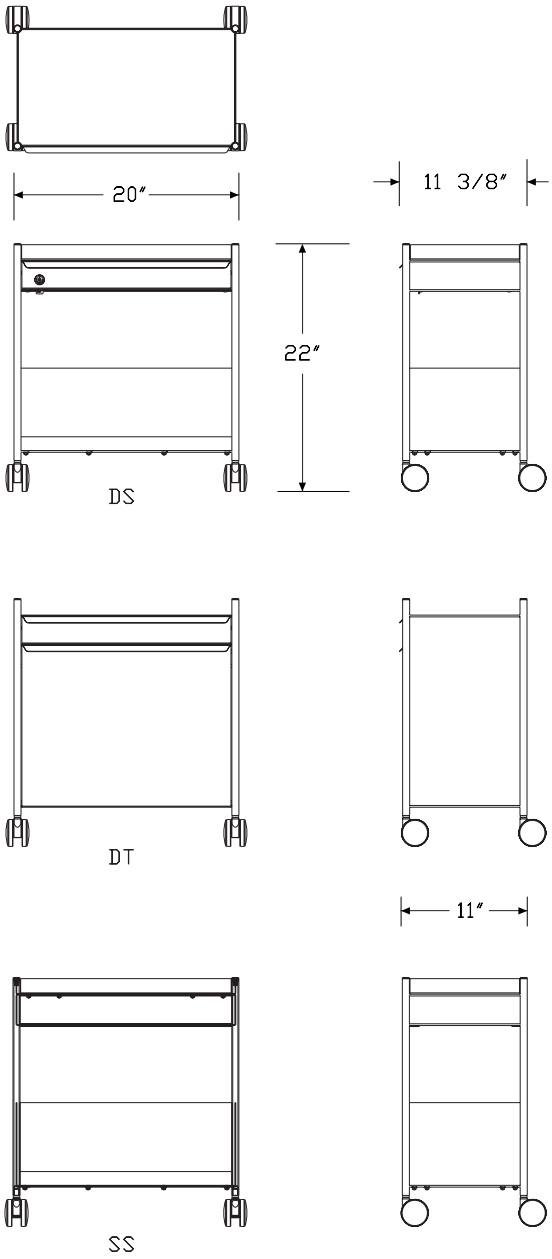

OE1 Mobile Storage Trolley, Individual *continued*

Specification Information
Step 1.
HZ820.

Step 2. Width	
20	20″ wide

Step 3. Depth	
11	11″ deep

Step 4. Configuration	
SS	top shelf/bottom shelf
DS	top drawer/bottom shelf
DT	top drawer/bottom tip-out bin

Step 5. Lock	
For top shelf/bottom shelf (SS)	
N	no lock
For top drawer/bottom shelf (DS) or top drawer/bottom tip-out bin (DT)	
L	lock
N	no lock

Step 6. Interior Option	
For top drawer/bottom tip-out bin (DT)	
F	filing option
N	no interior option
For top shelf/bottom shelf (SS) or top drawer/bottom shelf (DS)	
N	no interior option

Prices for Steps 1-6.						
	SSNN	**DSLN**	**DSNN**	**DTLF**	**DTLN**	**DTNF**
HZ820. 20 11	$866	1046	971	1445	1358	1370

	DTNN
HZ820. 20 11	$1284

Step 7. Finish		
Metallic Paint		
CN	metallic champagne	+$0
MS	metallic silver	+$0
SNA	satin aluminum	+$30
SNB	satin bronze	+$30
SNC	satin carbon	+$30
Sand Texture Paint		
8Q	folkstone grey	+$0
91	white	+$0
98	studio white	+$0
BK	black	+$0
G1	graphite	+$0
WL	sandstone	+$0
DB3	glacier	+$20
DN2	nightfall	+$20
DR1	canyon	+$20
OLF	olive	+$20

Step 8. Lock Option		
For lock (L)		
KA	keyed alike, black	+$0
KQ	keyed alike, chrome	+$0
KD	keyed differently, black	+$0
KC	keyed differently, chrome	+$0

OE1 Mobile Storage Trolley, Individual-Extended HZ825.

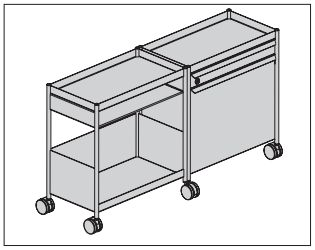

Product Information

Description

This individual-extended OE1 Workspace Collection™ Mobile Storage Trolley is painted metal and comes on casters. It provides 9 configurations through any combination of a top shelf/bottom shelf, top drawer/bottom shelf, or top drawer/bottom tip-out bin on each side. Storage is positioned to face an individual user. Options include a lock and file divider.

Notes

Drawer contains full-extension slides. Tip-out bin (DT) with filing (F) option accommodates front-to-back filing.

Divider color matches storage unit color.

Order optional accessories separately:

- OE1 storage liner (HZ840.)
- OE1 cushion top (HZ850.)
- OE1 bag hook (HZ870.)
- OE1 file divider add-on (HZ880.)
- OE1 storage organizer (HZ860.)

Lock options are the same on both sides.

For keyed-alike locks, order lock plugs separately. See Keyed-Alike Information in appendices.

See planning guide for additional information.

Dimensions

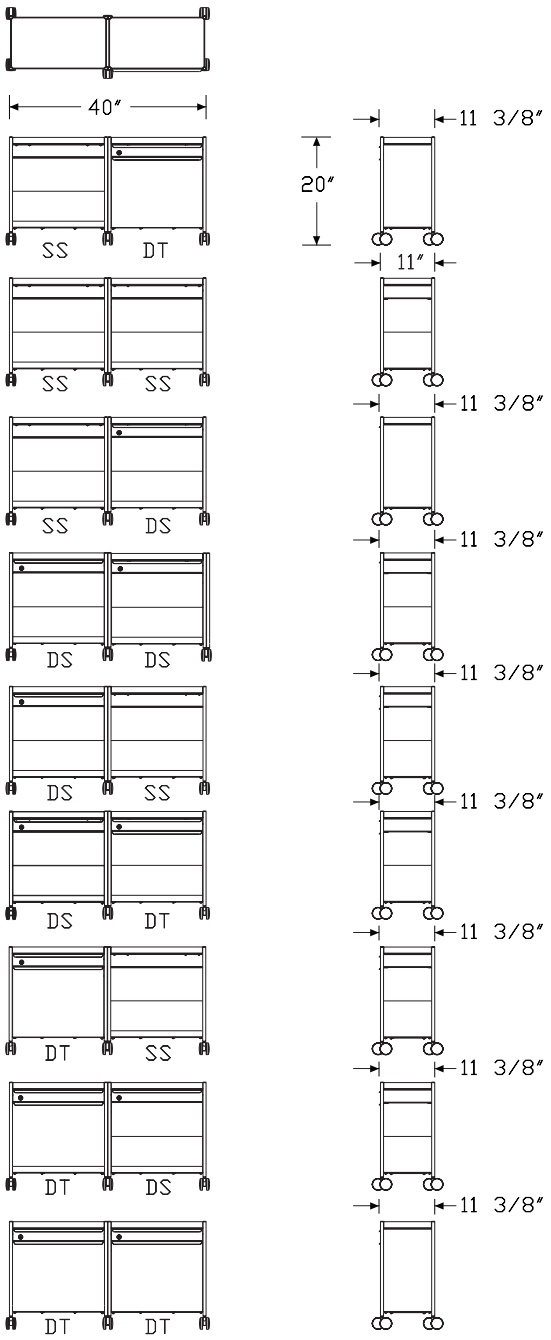

OE1 Mobile Storage Trolley, Individual-Extended *continued*

Specification Information

Step 1.

HZ825.

Step 2. Width

40	40″ wide

Step 3. Depth

11	11″ deep

Step 4. Configuration Left

SS	top shelf/bottom shelf
DS	top drawer/bottom shelf
DT	top drawer/bottom tip-out bin

Step 5. Configuration Right

SS	top shelf/bottom shelf
DS	top drawer/bottom shelf
DT	top drawer/bottom tip-out bin

Step 6. Lock

For top shelf/bottom shelf (SS) with top shelf/bottom shelf (SS)

N	no lock

For top shelf/bottom shelf (SS), top drawer/bottom shelf (DS), or top drawer/bottom tip-out bin (DT) with top shelf/bottom shelf (SS), top drawer/bottom shelf (DS), or top drawer/bottom tip-out bin (DT)

N	no lock
L	lock

For top drawer/bottom shelf (DS) or top drawer/bottom tip-out bin (DT) with top drawer/bottom shelf (DS) or top drawer/bottom tip-out bin (DT)

N	no lock
L	lock

Step 7. Interior Option

For top shelf/bottom shelf (SS), top drawer/bottom shelf (DS), or top drawer/bottom tip-out bin (DT) with top shelf/bottom shelf (SS), top drawer/bottom shelf (DS), or top drawer/bottom tip-out bin (DT)

N	no interior option
F	filing option

For top drawer/bottom tip-out bin (DT) with top drawer/bottom tip-out bin (DT)

N	no interior option
F	filing option

For top shelf/bottom shelf (SS) or top drawer/bottom shelf (DS) with top shelf/bottom shelf (SS) or top drawer/bottom shelf (DS)

N	no interior option

Prices for Steps 1-7.

	SSSSNN	SSDSNN	SSDSLN	SSDTNN	SSDTNF	SSDTLN
HZ825. 40 11	$1835	1940	2014	2357	2444	2432

	SSDTLF	DSSSNN	DSSSLN	DSDSNN	DSDSLN	DSDTNN
HZ825. 40 11	$2519	1940	2014	2045	2193	2463

	DSDTNF	DSDTLN	DSDTLF	DTSSNN	DTSSNF	DTSSLN
HZ825. 40 11	$2549	2612	2697	2357	2444	2432

	DTSSLF	DTDSNN	DTDSNF	DTDSLN	DTDSLF	DTDTNN
HZ825. 40 11	$2519	2463	2549	2612	2697	2881

	DTDTNF	DTDTLN	DTDTLF
HZ825. 40 11	$3054	3030	3203

Step 8. Finish

Metallic Paint

CN	metallic champagne	+$0
MS	metallic silver	+$0
SNA	satin aluminum	+$60
SNB	satin bronze	+$60
SNC	satin carbon	+$60

Sand Texture Paint

8Q	folkstone grey	+$0
91	white	+$0
98	studio white	+$0
BK	black	+$0
G1	graphite	+$0
WL	sandstone	+$0
DB3	glacier	+$50
DN2	nightfall	+$50
DR1	canyon	+$50
OLF	olive	+$50

OE1 Mobile Storage Trolley, Individual-Extended *continued*

Step 9. Lock Option		
For lock (L)		
KA	keyed alike, black	+$0
KQ	keyed alike, chrome	+$0
KD	keyed differently, black	+$0
KC	keyed differently, chrome	+$0

OE1 Mobile Storage Trolley, Shared-Extended HZ830.

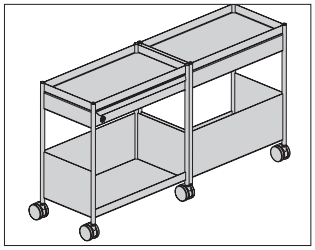

Product Information

Description

This shared-extended OE1 Workspace Collection™ Mobile Storage Trolley is painted metal and comes on casters. It provides 3 configurations of a top shelf/bottom shelf, top drawer/bottom shelf, or top drawer/bottom tip-out bin, mirrored on each side. Storage is intended to be shared between 2 users. Options include a lock and file divider.

Notes

Configuration selection will be the same on both sides.

Drawer contains full-extension slides. Tip-out bin (DT) with filing (F) option accommodates front-to-back filing.

Divider color matches storage unit color.

Order optional accessories separately:

- OE1 storage liner (HZ840.)
- OE1 cushion top (HZ850.)
- OE1 bag hook (HZ870.)
- OE1 file divider add-on (HZ880.)
- OE1 storage organizer (HZ860.)

For keyed-alike locks, order lock plugs separately. See Keyed-Alike Information in appendices.

See planning guide for additional information.

Dimensions

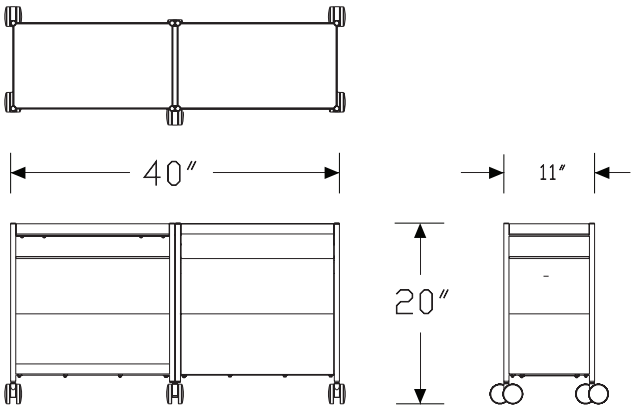

SS

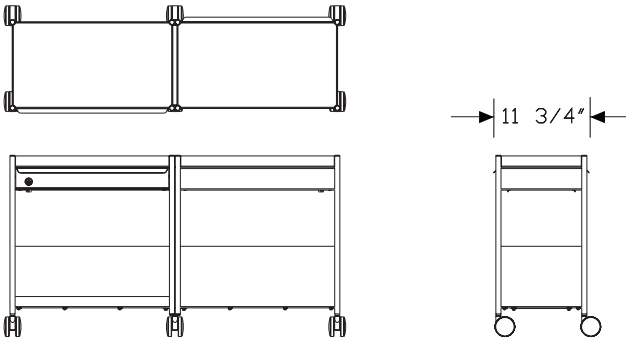

DS

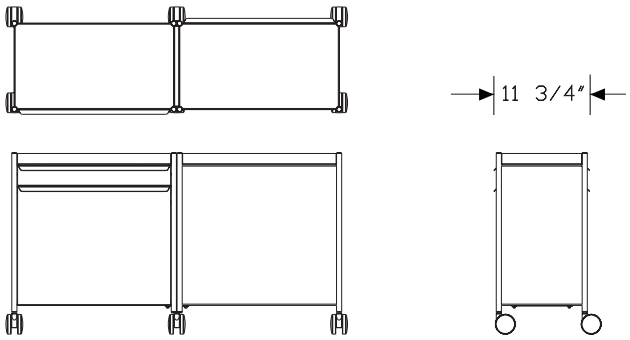

DT

OE1 Mobile Storage Trolley, Shared-Extended *continued*

Specification Information

Step 1.

HZ830.

Step 2. Width

40	40" wide

Step 3. Depth

11	11" deep

Step 4. Configuration

SS	top shelf/bottom shelf
DS	top drawer/bottom shelf
DT	top drawer/bottom tip-out bin

Step 5. Lock

For top shelf/bottom shelf (SS)

N	no lock

For top drawer/bottom shelf (DS) or top drawer/bottom tip-out bin (DT)

L	lock
N	no lock

Step 6. Interior Option

For top drawer/bottom tip-out bin (DT)

F	filing option
N	no interior option

For top shelf/bottom shelf (SS) or top drawer/bottom shelf (DS)

N	no interior option

Prices for Steps 1-6.

	SSNN	DSLN	DSNN	DTLF	DTLN	DTNF
HZ830. 40 11	$1835	2193	2045	3203	3030	3054

	DTNN
HZ830. 40 11	$2881

Step 7. Finish

Metallic Paint

CN	metallic champagne	+$0
MS	metallic silver	+$0
SNA	satin aluminum	+$60
SNB	satin bronze	+$60
SNC	satin carbon	+$60

Sand Texture Paint

8Q	folkstone grey	+$0
91	white	+$0
98	studio white	+$0
BK	black	+$0
G1	graphite	+$0
WL	sandstone	+$0
DB3	glacier	+$50
DN2	nightfall	+$50
DR1	canyon	+$50
OLF	olive	+$50

Step 8. Lock Option

For lock (L)

KA	keyed alike, black	+$0
KQ	keyed alike, chrome	+$0
KD	keyed differently, black	+$0
KC	keyed differently, chrome	+$0

OE1 Mobile Storage Trolley, Dual HZ835.

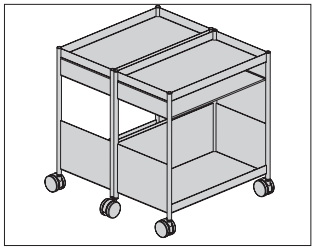

Product Information

Description

This dual OE1 Workspace Collection™ Mobile Storage Trolley is painted metal and comes on casters. It provides 3 configurations of a top shelf/bottom shelf, top drawer/bottom shelf, or top drawer/bottom tip-out bin, mirrored on both sides. Options include a lock and file divider.

Notes

Configuration selection will be the same on both sides.

Drawer contains full-extension slides. Tip-out bin (DT) with filing (F) option accommodates front-to-back filing.

Divider color matches storage unit color.

Order optional accessories separately:

- OE1 storage liner (HZ840.)
- OE1 cushion top (HZ850.)
- OE1 bag hook (HZ870.)
- OE1 file divider add-on (HZ880.)
- OE1 storage organizer (HZ860.)

For keyed-alike locks, order lock plugs separately. See Keyed-Alike Information in appendices.

See planning guide for additional information.

Dimensions

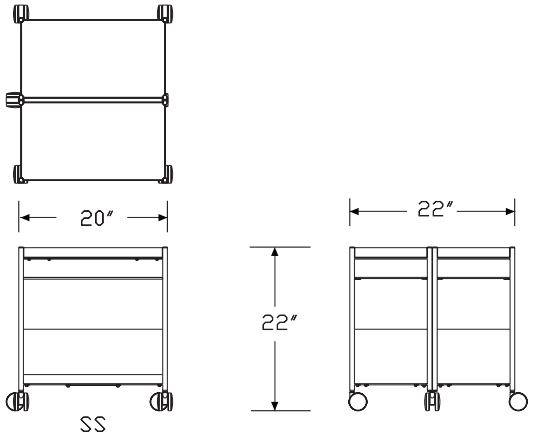

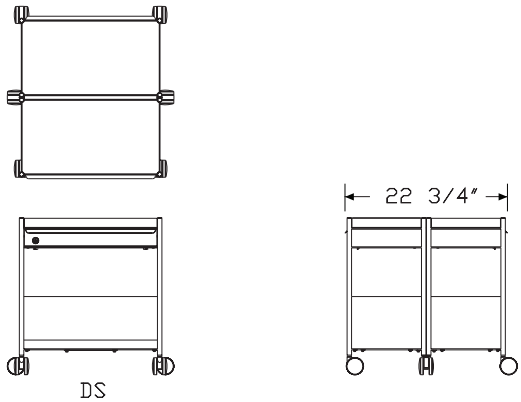

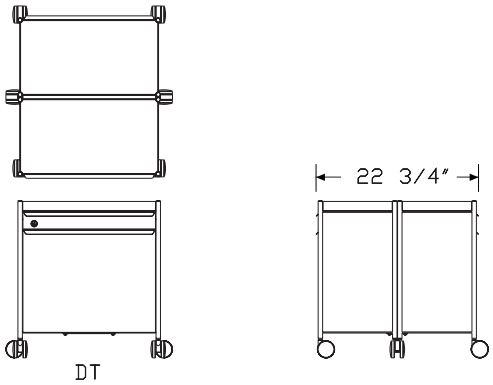

OE1 Mobile Storage Trolley, Dual

continued

Specification Information

Step 1.

HZ835.

Step 2. Width

20	20" wide

Step 3. Depth

22	22" deep

Step 4. Configuration

SS	top shelf/bottom shelf
DS	top drawer/bottom shelf
DT	top drawer/bottom tip-out bin

Step 5. Lock

For top shelf/bottom shelf (SS)

N	no lock

For top drawer/bottom shelf (DS) or top drawer/bottom tip-out bin (DT)

L	lock
N	no lock

Step 6. Interior Option

For top drawer/bottom tip-out bin (DT)

F	filing option
N	no interior option

For top shelf/bottom shelf (SS) or top drawer/bottom shelf (DS)

N	no interior option

Prices for Steps 1-6.

	SSNN	DSLN	DSNN	DTLF	DTLN	DTNF
HZ835. 20 22	$1835	2193	2045	3203	3030	3054

	DTNN
HZ835. 20 22	$2881

Step 7. Finish

Metallic Paint

CN	metallic champagne	+$0
MS	metallic silver	+$0
SNA	satin aluminum	+$60
SNB	satin bronze	+$60
SNC	satin carbon	+$60

Sand Texture Paint

8Q	folkstone grey	+$0
91	white	+$0
98	studio white	+$0
BK	black	+$0
G1	graphite	+$0
WL	sandstone	+$0
DB3	glacier	+$50
DN2	nightfall	+$50
DR1	canyon	+$50
OLF	olive	+$50

Step 8. Lock Option

For lock (L)

KA	keyed alike, black	+$0
KQ	keyed alike, chrome	+$0
KD	keyed differently, black	+$0
KC	keyed differently, chrome	+$0

OE1 Storage Trolley, Liner HZ840.

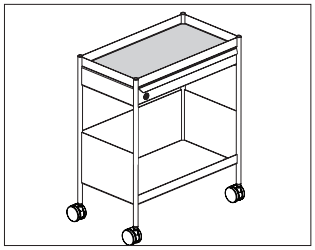

Product Information

Description

This polyester felt liner comes in 1 size and fits onto a storage trolley top, a top shelf, or bottom shelf. Liner is installed and movable without tools.

Notes

Liner ships as a quantity of 1.

To accommodate a liner on both sides of OE1 individual-extended (HZ825.), shared-extended (HZ830.), or dual (HZ835.) storage trolleys, 2 liners are needed.

Compatible with the following products:

- OE1 freestanding storage trolley, individual (HZ800.)
- OE1 mobile storage trolley, individual (HZ820.)
- OE1 mobile storage trolley, individual-extended (HZ825.)
- OE1 mobile storage trolley, shared-extended (HZ830.)
- OE1 mobile storage trolley, dual (HZ835.)

See planning guide for additional information.

Dimensions

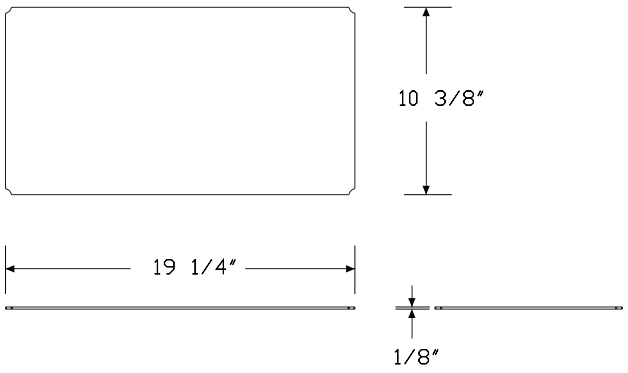

Specification Information

Step 1.

HZ840.

Step 2. Width

20 20″ wide

Step 3. Depth

11 11″ deep

Prices for Steps 1-3.

	11
HZ840. 20	$159

Step 4. Liner Fabric

Price Category 4	+$0

OE1 Storage Trolley, Cushion Top HZ850.

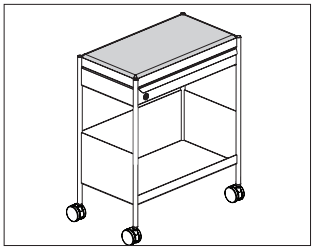

Product Information

Description

This 2″ fabric cushion top comes in 1 size and fits onto an OE1 Workspace Collection™ Storage Trolley top.

Notes

Cushion top ships as a quantity of 1.

To accommodate a cushion top on both sides of OE1 individual-extended (HZ825.), shared-extended (HZ830.), or dual (HZ835.) storage trolleys, 2 cushion tops are needed.

Compatible with the following products:

- OE1 freestanding storage trolley, individual (HZ800.)
- OE1 mobile storage trolley, individual (HZ820.)
- OE1 mobile storage trolley, individual-extended (HZ825.)
- OE1 mobile storage trolley, shared-extended (HZ830.)
- OE1 mobile storage trolley, dual (HZ835.)

Cushion top accepts Customer's Own Material (COM). COM requires 1 yard.

See planning guide for additional information.

Dimensions

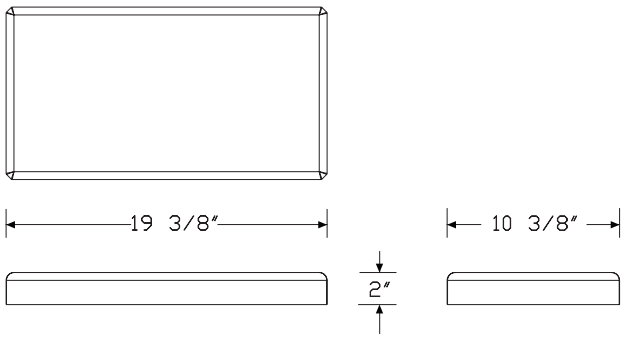

Specification Information

Step 1.

HZ850.

Step 2. Width

20 20″ wide

Step 3. Depth

11 11″ deep

Prices for Steps 1-3.

	11
HZ850. 20	$290

Step 4. Fabric

Price Category 1	+$0
Price Category 2	+$77
Price Category 3	+$108
Price Category 4	+$143
Price Category 5	+$185
Price Category 7	+$259
Price Category 9	+$1721
Price Category B	+$53
Price Category C	+$72
Price Category D	+$92
Price Category E	+$110
Price Category F	+$143
Price Category G	+$186
Price Category H	+$226
Price Category I	+$265
Price Category L	+$384
Price Category X	+$845
Price Category Y	+$888

OE1 Storage Trolley, Organizer HZ860.

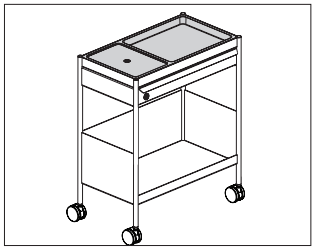

Product Information

Description

This molded plastic organizer comes in 1 size and fits onto an OE1 Workspace Collection™ Storage Trolley top.

Notes

Organizer ships as a quantity of 1.

Compatible with the following products:

- OE1 freestanding storage trolley, individual (HZ800.)
- OE1 mobile storage trolley, individual (HZ820.)
- OE1 mobile storage trolley, individual-extended (HZ825.)
- OE1 mobile storage trolley, shared-extended (HZ830.)
- OE1 mobile storage trolley, dual (HZ835.)

See planning guide for additional information.

Dimensions

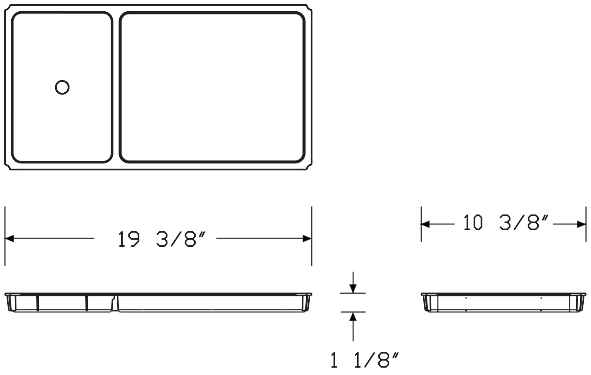

Specification Information

Step 1.

HZ860.

Step 2. Width

20	20″ wide

Step 3. Depth

11	11″ deep

Prices for Steps 1-3.

	11
HZ860. 20	$201

Step 4. Organizer Finish

8Q	folkstone grey	+$0
BK	black	+$0

OE1 Storage Trolley, Bag Hook HZ870.

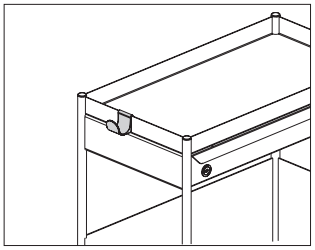

Product Information

Description

This plastic bag hook attaches to the top of an OE1 Workspace Collection™ Storage Trolley without the use of tools.

Notes

Bag hook ships as a quantity of 1.

Bag hook holds up to 35 pounds.

Compatible with the following products:

- OE1 freestanding storage trolley, individual (HZ800.)
- OE1 mobile storage trolley, individual (HZ820.)
- OE1 mobile storage trolley, individual-extended (HZ825.)
- OE1 mobile storage trolley, shared-extended (HZ830.)
- OE1 mobile storage trolley, dual (HZ835.)

See planning guide for additional information.

Dimensions

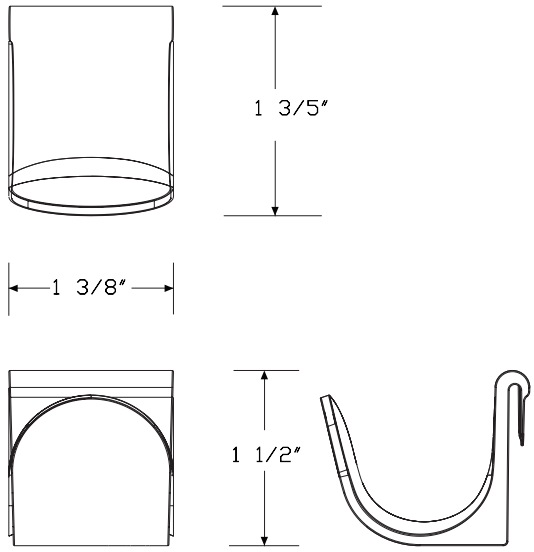

Specification Information

Step 1.

HZ870.	$20

Step 2. Finish

8Q	folkstone grey	+$0
91	white	+$0
98	studio white	+$0
BK	black	+$0
DB3	glacier	+$10
DN2	nightfall	+$10
DR1	canyon	+$10
OLF	olive	+$10

OE1 Storage Trolley, File Divider Add-On HZ880.

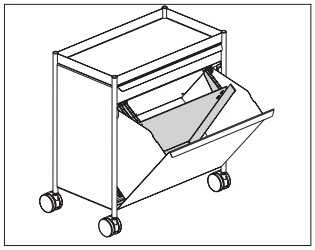

Product Information

Description

This painted metal file divider add-on is for use within a top drawer/ bottom tip-out bin configuration in an OE1 Workspace Collection™ Storage Trolley. It can be added to the product at any time.

Notes

File divider add-on ships as a quantity of 1.

Compatible with the following products:

- OE1 freestanding storage trolley, individual (HZ800.)
- OE1 mobile storage trolley, individual (HZ820.)
- OE1 mobile storage trolley, individual-extended (HZ825.)
- OE1 mobile storage trolley, shared-extended (HZ830.)
- OE1 mobile storage trolley, dual (HZ835.)

See planning guide for additional information.

Dimensions

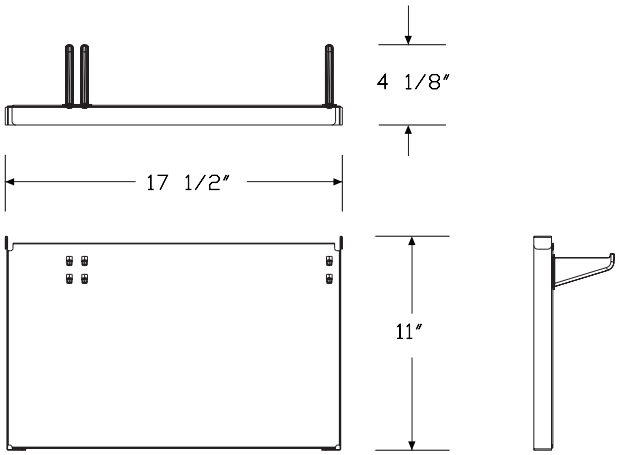

Specification Information

Step 1.

HZ880.		$108

Step 2. Finish

Metallic Paint

CN	metallic champagne	+$0
MS	metallic silver	+$0
SNA	satin aluminum	+$10
SNB	satin bronze	+$10
SNC	satin carbon	+$10

Sand Texture Paint

8Q	folkstone grey	+$0
91	white	+$0
98	studio white	+$0
BK	black	+$0
G1	graphite	+$0
WL	sandstone	+$0
DB3	glacier	+$8
DN2	nightfall	+$8
DR1	canyon	+$8
OLF	olive	+$8

OE1 Workbox Y7236.

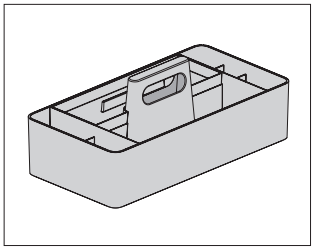

Product Information

Description

This molded plastic workbox comes in 1 size and fits onto an OE1 Storage Trolley.

Notes

Order OE1 storage trolley (HZ800., HZ82x., HZ83x.) separately.

Dimensions

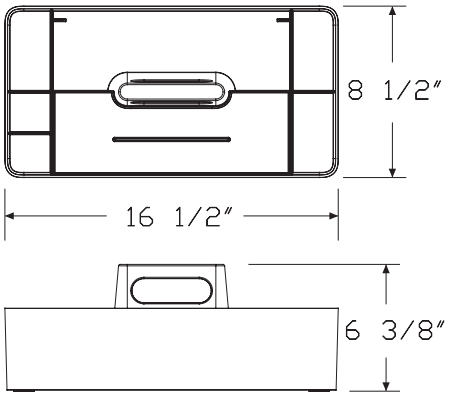

Specification Information

Step 1.

Y7236.

Step 2. Width

17	17″ wide

Step 3. Depth

09	9″ deep

Prices for Steps 1-3.

	09
Y7236. 17	$238

Step 4. Workbox Finish

8Q	folkstone grey	+$0
DB3	glacier	+$0
DN3	nightfall lt	+$0

OE1 Freestanding Curtain - Straight HZ600.

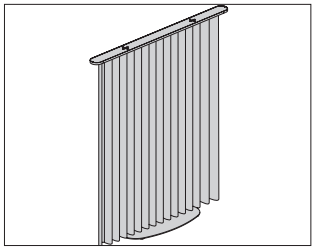

Product Information

Description

This freestanding fabric curtain hangs on a frame. Non-friction adhesive pads on bottom of frame base provide for mobility.

Notes

Fabrics in price categories 2 and 5 have a seam.

All fabrics for this curtain meet NFPA 701 flame retardancy standards.

See planning guide for additional information.

Dimensions

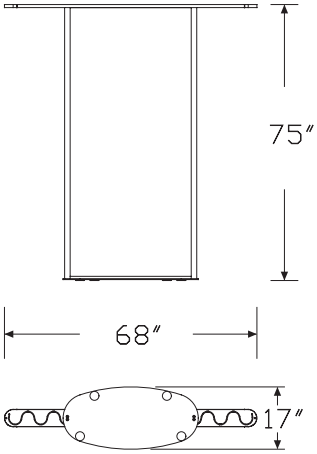

Specification Information

Step 1.

HZ600.

Step 2. Height

75	75″ high

Step 3. Width

68	68″ wide

Prices for Steps 1-3.

	68
HZ600. 75	$2915

Step 4. Frame/Base Finish

Sand Texture Paint

8Q	folkstone grey	+$0
91	white	+$0
98	studio white	+$0
BK	black	+$0
DB3	glacier	+$8
DN2	nightfall	+$8
DR1	canyon	+$8
OLF	olive	+$8

Step 5. Fabric

Price Category 2	+$0
Price Category 5	+$297
Price Category 8	+$346

OE1 Freestanding Curtain - Curved HZ610.

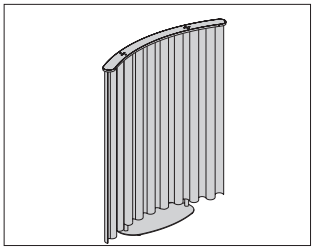

Product Information

Description

This freestanding curved fabric curtain hangs on a frame. Non-friction adhesive pads on bottom of frame base provide for mobility.

Notes

Fabrics in price categories 2 and 5 have a seam.

All fabrics for this curtain meet NFPA 701 flame retardancy standards.

See planning guide for additional information.

Dimensions

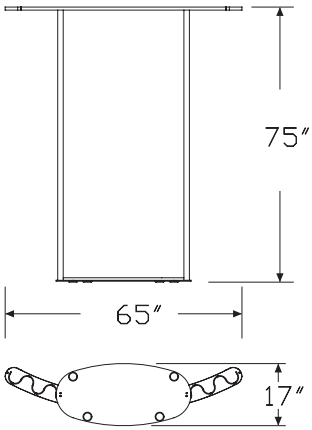

Specification Information

Step 1.

HZ610.

Step 2. Height

75	75″ high

Step 3. Width

68	68″ wide

Prices for Steps 1-3.

	68
HZ610. 75	$3270

Step 4. Frame/Base Finish

Sand Texture Paint

8Q	folkstone grey	+$0
91	white	+$0
98	studio white	+$0
BK	black	+$0
DB3	glacier	+$8
DN2	nightfall	+$8
DR1	canyon	+$8
OLF	olive	+$8

Step 5. Fabric

Price Category 2	+$0
Price Category 5	+$297
Price Category 8	+$346

OE1 Curved Screen HZ620.

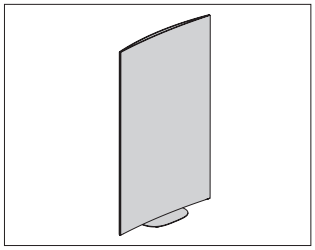

Product Information

Description

This screen is a user-movable, fabric-covered concave boundary screen. Fabrics must be specified for each side of the screen. Base plate has non-friction glides for mobility.

Notes

For tackable fabric, fabric direction is horizontal (railroaded).

Fabric-covered screen accepts Customer's Own Material (COM).

Width (surface material)—Yardage

48—2.44 yards per side

For information on multiple quantities or non-directional fabrics, contact COM Department. See Order Information in appendices.

See planning guide for additional information.

Dimensions

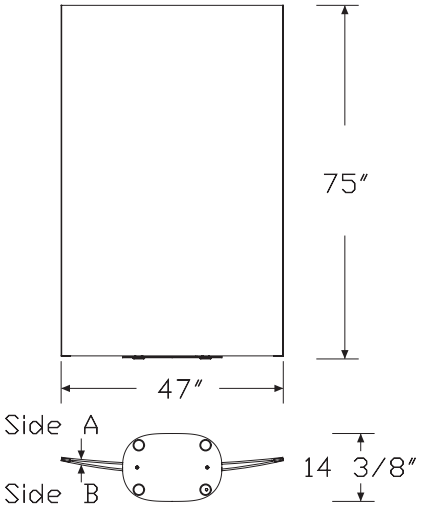

Specification Information

Step 1.

HZ620.

Step 2. Height

75	75″ high

Step 3. Width

48	48″ wide

Prices for Steps 1-3.

	48
HZ620. 75	$2158

Step 4. Frame/Base Finish

Sand Texture Paint

8Q	folkstone grey	+$0
91	white	+$0
98	studio white	+$0
BK	black	+$0
DB3	glacier	+$0
DN2	nightfall	+$0
DR1	canyon	+$0
OLF	olive	+$0

Step 5. Fabric - Side A

Price Category 1	+$0
Price Category 2	+$22
Price Category 3	+$46
Price Category 4	+$86
Price Category 5	+$140
Price Category C	+$177

Step 6. Fabric - Side B

Price Category 1	+$0
Price Category 2	+$22
Price Category 3	+$46
Price Category 4	+$86
Price Category 5	+$140
Price Category C	+$177

OE1 Bag Hook, Leg Attached HZ910.

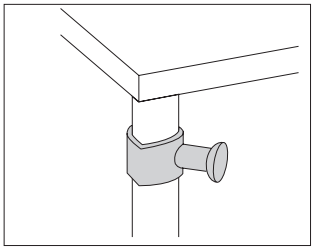

Product Information

Description

This bag hook attaches to an OE1 Workspace Collection™ Teardrop Leg and is intended to hold bags under the work surface. Bag hook is user movable and works on all OE1 teardrop legs.

Dimensions

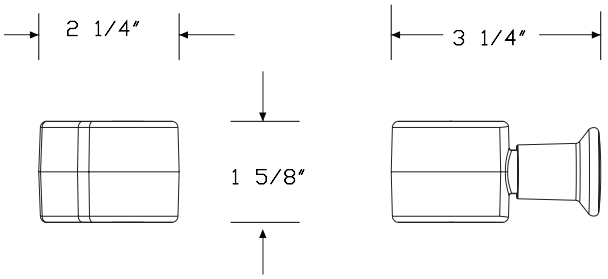

Specification Information

Step 1.

HZ910.	$40

Step 2. Finish

8Q	folkstone grey	+$0
BK	black	+$0
DB3	glacier	+$10
DN2	nightfall	+$10
DR1	canyon	+$10
OLF	olive	+$10

OE1 Flip Chart Hook, Pair HZ920.

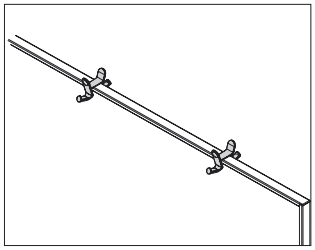

Product Information

Description

These molded plastic flip chart hooks attach to the OE1 Workspace Collection™ Project Board to hold flip chart paper. Paper not included. Package contains 2 separate hooks.

Notes

Flip chart hook pair ships with 2 hooks.

Use with OE1 project board (HZ210.), ordered separately.

See planning guide for additional information.

Dimensions

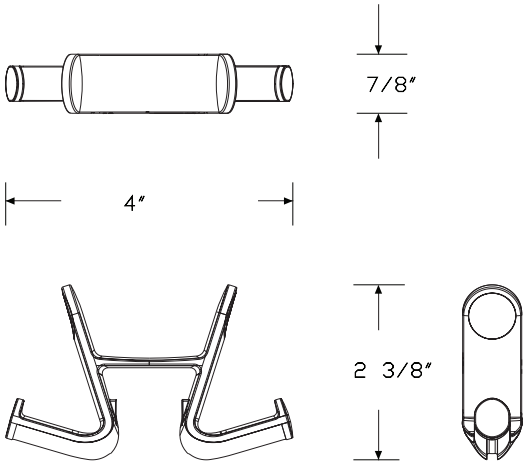

Specification Information

Step 1.

HZ920.	$44

Step 2. Finish

98	studio white	+$0
8Q	folkstone grey	+$0
BK	black	+$0

OE1 Marker Cup Y7235.

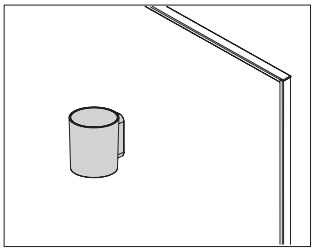

Product Information

Description

This marker cup comes with 1 cup-style holder, 4 dry erase markers (1 each of black, red, blue, and green), and 1 microfiber towel. The cup attaches to a vertical, hard surface with suction cups or can sit flat on a worksurface.

Dimensions

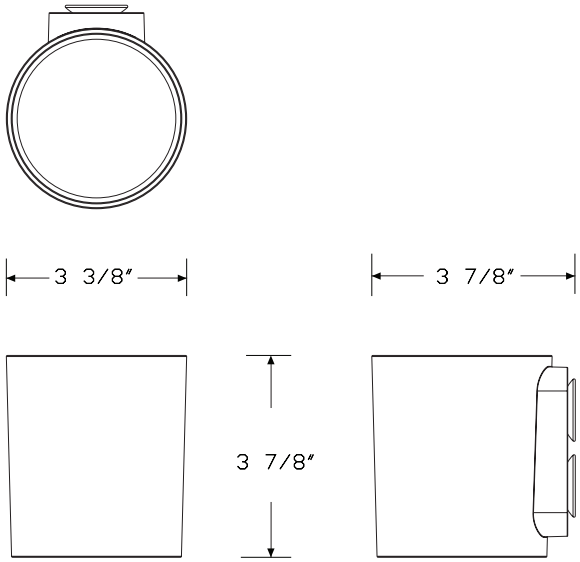

Specification Information

Step 1.

Y7235.	$121

Step 2. Finish

8Q	folkstone grey	+$0
BK	black	+$0
DB3	glacier	+$5
DN2	nightfall	+$5
DR1	canyon	+$5
OLF	olive	+$5

Index by Product Name

OE1 Workspace Collection™	
OE1 Accessory Bridge	page(s) 73
OE1 Agile Wall, Bottom Shelves	16
OE1 Agile Wall, Frame with Casters	5
OE1 Agile Wall, Frame with Glides	7
OE1 Agile Wall, Frame with Glides, for Full Height Shelves	9
OE1 Agile Wall, Full Height Shelves	18
OE1 Agile Wall, Lower Tile	13
OE1 Agile Wall, Monitor Mount	20
OE1 Agile Wall, Upper Tile	10
OE1 Bag Hook, Leg Attached	138
OE1 Bridge Connector	75
OE1 Bridge Mounted Screen, Flat Edge	85
OE1 Bridge Mounted Screen, Laminate	90
OE1 Bridge Mounted Screen, Pari	88
OE1 Communal Table Flat Edge Screen, Surface Attached with Modesty	51
OE1 Communal Table Metal Screen, Surface Attached with Modesty	49
OE1 Communal Table Pari Screen, Surface Attached with Modesty	53
OE1 Controlled Receptacle, 4-Circuit, 15 Amp (Package of 4)	106
OE1 Controlled Receptacle, 20 Amp	108
OE1 Curved Screen	137
OE1 End Caps for Accessory Bridge 2/Pkg	74
OE1 Flip Chart Hook, Pair	139
OE1 Freestanding Curtain - Curved	136
OE1 Freestanding Curtain - Straight	135
OE1 Freestanding Storage Trolley, Individual	118
OE1 Ganging Connector	84
OE1 Huddle Table	97
OE1 Leg Cable Manager for Communal Tables	58
OE1 Leg Cable Manager for Seated Height Tables	83
OE1 Marker Cup	140
OE1 Metal Boundary Screen	117
OE1 Micro Pack, 3-Pack	27
OE1 Micro Pack, 4-Pack	30
OE1 Micro Pack Center Screen, 4-Pack, Flat Edge	36
OE1 Micro Pack Center Screen, 4-Pack, Laminate	38
OE1 Micro Pack Center Screen, 4-Pack, Pari	37
OE1 Micro Pack Privacy Screen, 3-Pack	34
OE1 Micro Pack Privacy Screen, Single/4-Pack	33
OE1 Micro Pack Screen Liner	35
OE1 Micro Pack, Single	24
OE1 Mobile Easel Base	21
OE1 Mobile Storage Trolley, Dual	127
OE1 Mobile Storage Trolley, Individual	120
OE1 Mobile Storage Trolley, Individual-Extended	122
OE1 Mobile Storage Trolley, Shared-Extended	125
OE1 Movable Screen, Flat Edge	113
OE1 Movable Screen, Pari	109
OE1 Nook	92
OE1 Nook Liner	95
OE1 One-Piece Seated Communal Table, Single Sided	43
OE1 One-Piece Standing Communal Table, Double Sided	55
OE1 One-Piece Standing Communal Table, Single Sided	40
OE1 Power Entry Cover	102
OE1 Power Entry, Internal Direct Connect	100
OE1 Power Entry, New York	101
OE1 Power Harness	103
OE1 Power Jumper	104
OE1 Project Board	22
OE1 Project Table	79
OE1 Receptacle, 4-Circuit, 15 Amp (Package of 4)	105
OE1 Receptacle, 20 Amp	107
OE1 Rectangular Table	70
OE1 Stiffener	69
OE1 Storage Trolley, Bag Hook	132
OE1 Storage Trolley, Cushion Top	130
OE1 Storage Trolley, File Divider Add-On	133
OE1 Storage Trolley, Liner	129
OE1 Storage Trolley, Organizer	131
OE1 Teardrop Leg	65
OE1 Three-Piece Standing Communal Table, Double Sided	59
OE1 Two-Piece Standing Communal Table, Double Sided	62
OE1 Two-Piece Standing Communal Table, Single Sided	46
OE1 Wall Rail Kit	23
OE1 Workbox	134
OE1 Worksurface, Project Table	76
OE1 Worksurface, Rectangle	66

Index by Product Number

HZ100. OE1 Agile Wall, Frame with Casters page(s) 5
HZ110. OE1 Agile Wall, Frame with Glides 7
HZ120. OE1 Agile Wall, Frame with Glides, for Full Height Shelves 9
HZ130. OE1 Agile Wall, Upper Tile 10
HZ140. OE1 Agile Wall, Lower Tile 13
HZ150. OE1 Agile Wall, Bottom Shelves 16
HZ160. OE1 Agile Wall, Full Height Shelves 18
HZ170. OE1 Agile Wall, Monitor Mount 20
HZ200. OE1 Mobile Easel Base 21
HZ210. OE1 Project Board 22
HZ220. OE1 Wall Rail Kit 23
HZ300S OE1 Micro Pack, Single 24
HZ310S OE1 Micro Pack, 3-Pack 27
HZ320S OE1 Micro Pack, 4-Pack 30
HZ330. OE1 Micro Pack Privacy Screen, Single/4-Pack 33
HZ340. OE1 Micro Pack Privacy Screen, 3-Pack 34
HZ350. OE1 Micro Pack Screen Liner 35
HZ360. OE1 Micro Pack Center Screen, 4-Pack, Flat Edge 36
HZ370. OE1 Micro Pack Center Screen, 4-Pack, Pari 37
HZ380. OE1 Micro Pack Center Screen, 4-Pack, Laminate 38
HZ400S OE1 One-Piece Standing Communal Table, Single Sided 40
HZ405S OE1 One-Piece Seated Communal Table, Single Sided 43
HZ410S OE1 Two-Piece Standing Communal Table, Single Sided 46
HZ420. OE1 Communal Table Metal Screen, Surface Attached with Modesty 49
HZ430. OE1 Communal Table Flat Edge Screen, Surface Attached with Modesty 51
HZ440. OE1 Communal Table Pari Screen, Surface Attached with Modesty 53
HZ450S OE1 One-Piece Standing Communal Table, Double Sided 55
HZ460S OE1 Two-Piece Standing Communal Table, Double Sided 62
HZ470S OE1 Three-Piece Standing Communal Table, Double Sided 59
HZ480. OE1 Leg Cable Manager for Communal Tables 58
HZ500. OE1 Teardrop Leg 65
HZ505S OE1 Worksurface, Rectangle 66
HZ510. OE1 Stiffener 69
HZ515S OE1 Rectangular Table 70
HZ520. OE1 Accessory Bridge 73
HZ525. OE1 End Caps for Accessory Bridge 2/Pkg 74
HZ530. OE1 Bridge Connector 75
HZ535. OE1 Bridge Mounted Screen, Flat Edge 85
HZ540. OE1 Bridge Mounted Screen, Pari 88
HZ545. OE1 Bridge Mounted Screen, Laminate 90
HZ550S OE1 Worksurface, Project Table 76
HZ555S OE1 Project Table 79
HZ560. OE1 Leg Cable Manager for Seated Height Tables 83
HZ565. OE1 Ganging Connector 84
HZ570S OE1 Nook 92
HZ575. OE1 Nook Liner 95
HZ580S OE1 Huddle Table 97
HZ600. OE1 Freestanding Curtain - Straight 135
HZ610. OE1 Freestanding Curtain - Curved 136
HZ620. OE1 Curved Screen 137
HZ700. OE1 Power Entry, Internal Direct Connect 100
HZ710. OE1 Power Entry, New York 101
HZ720. OE1 Power Entry Cover 102
HZ730. OE1 Power Harness 103
HZ740. OE1 Power Jumper 104
HZ750. OE1 Receptacle, 4-Circuit, 15 Amp (Package of 4) 105
HZ760. OE1 Controlled Receptacle, 4-Circuit, 15 Amp (Package of 4) 106
HZ770. OE1 Receptacle, 20 Amp 107
HZ780. OE1 Controlled Receptacle, 20 Amp 108
HZ800. OE1 Freestanding Storage Trolley, Individual 118
HZ820. OE1 Mobile Storage Trolley, Individual 120
HZ825. OE1 Mobile Storage Trolley, Individual-Extended 122
HZ830. OE1 Mobile Storage Trolley, Shared-Extended 125
HZ835. OE1 Mobile Storage Trolley, Dual 127
HZ840. OE1 Storage Trolley, Liner 129
HZ850. OE1 Storage Trolley, Cushion Top 130
HZ860. OE1 Storage Trolley, Organizer 131
HZ870. OE1 Storage Trolley, Bag Hook 132
HZ880. OE1 Storage Trolley, File Divider Add-On 133
HZ910. OE1 Bag Hook, Leg Attached 138
HZ920. OE1 Flip Chart Hook, Pair 139
Y1141. OE1 Movable Screen, Pari 109
Y1142. OE1 Movable Screen, Flat Edge 113
Y1143. OE1 Metal Boundary Screen 117
Y7235. OE1 Marker Cup 140
Y7236. OE1 Workbox 134

20-Day or Less/Assigned Lead-Time Order Information

GSA

20-Day or Less and Assigned Lead-Time Programs

20-day or less and assigned lead-time products are designed for established Herman Miller dealers with pre-approved credit.

Products are distributed from multiple manufacturing facilities across the United States. All products and options not designated by an Assigned Lead-Time icon A will ship in 20 business days or less after being acknowledged by Herman Miller. Products and options designated by an A are on the assigned lead-time program and will ship in 20 days, less than 20 days, or more than 20 days from order acknowledgement.

Ordering Procedure

Please place orders through Order Manager. If this is not available to you, place orders through mail or fax. Verbal purchase orders will not be accepted.

Order Entry fax number for Meridian® Filing and Storage:
(616) 846 9236.

Order Entry fax number for all other products:
(616) 654 3085.

For more information, contact your Customer Care representative at: (866) 854 3048 ext 3400.

Shipments and Delivery

Per Herman Miller Terms and Conditions.

Changes and Cancellation

Per Herman Miller Terms and Conditions.

Keyed-Alike Locks

All components with locks may be specified keyed alike. Products with keyed-alike locks will be shipped with lock chassis installed. Installation of lock cylinders will be on-site according to instructions provided. Herman Miller, Inc., will not be responsible for lock cylinder installation.

When specifying product keyed-alike, include separate lines on your order for the lock cylinders.

For Action Office®, Ethospace®, Quadrant®, and Supplemental products, list cylinder part number and key number (232092-XXX); select a key number (or numbers) between 226 and 427, excluding numbers 408 and 412.

The following products require a different lock cylinder part number.

Specify UKY001-XXX for these products only; select a key number (or numbers) between 226 and 427, excluding numbers 408 and 412.

A3013.
A3053.
G5180.
G5181.
G5280.

The keys provided in 232092-XXX and UKY001-XXX kits work with either cylinder type, provided the key numbers match.

For Tu® Storage, Canvas Office Landscape®, and Meridian® Storage, see the following charts.

Keyed-alike locks are field installed.

To order keyed-alike locks for Action Office® Series 1 and 2 door panels, please contact Customer Care.

A master key can be used to open any lock on an attached or freestanding component. In addition, a removal key or lock change tool is required to remove lock plugs. Customers interested in ordering master keys, removal keys, or lock change tools should contact Customer Care.

For Canvas overhead and lower storage units, specify as follows:

Specification Code	Part Number	Color	Lock Series
KA	1B2JK7-XXX[1]	chrome	UM series 226-427

For Meridian Storage and Tu Storage, specify as follows:

Specification Code	Key Number	Color	Lock Series
KA	232092-XXX[1]	black	UM series 226-427
KA	1B2JK7-XXX[1]	chrome	UM series 226-427

For Canvas Metal Desk overhead units, specify as follows:

Specification Code	Key Number	Color	Lock Series
KA	232092-XXX[1]	black	UM series 226-427
KC	1B2JK7-XXX[1]	chrome	UM series 226-427

Key Number:
XXX[1] = a key number between 226 and 427 (excluding 408 and 412)

Customer's Own Material Order Information — Workspaces

GSA

Customer's Own Material

Program Overview

The Customer's Own Material (COM) program gives you the option of using textiles other than those listed. Herman Miller will test textiles for application to Herman Miller products and will process orders for those with approved COM textiles only. COM textiles are on assigned lead times.

Omni lists an overview of fabrics that have been tested and indicates whether or not they were approved for application to Herman Miller products.

Specific information on the terms and conditions, testing, approval, and ordering process for COM is listed below. Questions about the COM program and requests for assistance may be directed to your COM representative at:
(616) 654 3400
(866) 854 3048 ext 6543400

Customer's Own Material Warranty

Herman Miller does not warrant COM textiles. COM textiles are tested for application only; they are not tested for performance. The Herman Miller warranty does apply to the underlying products.

Suppliers of COM textiles are responsible for color consistency within commercial tolerances, UV stability, and resistance to soiling and perspiration.

Customer's Own Material Pricing

COM is a Category 1 fabric. There are no application charges for COM fabrics.

Ordering and payment for COM textile yardage are the responsibility of the customer and the textile supplier.

If desired, Herman Miller will purchase COM textiles directly from Maharam, Camira, C.F. Stinson, Guilford of Maine, Luna Textiles, Momentum Textiles and Ultrafabrics to simplify ordering and shipment. For this service, refer to the Supplier Connection program.

Application Note

Herman Miller does not guarantee that Customer's Own Material (COM) fabric patterns will align across panels/tiles or from one screen to the next. We also do not guarantee that COM fabric designs will be positioned consistently in the same location across several panels, tiles, or screens.

Textile Approval

1. Select a COM textile and a Herman Miller product.
2. If your textile does not show as tested in Omni, submit a request. You will be required to select a specific color of the textile and feature of the product to test, i.e., seat, back, etc.
3. Herman Miller will notify you of approval or disapproval within 4 days from receipt of the test yardage.

GSA

Ordering Products with COM

1. Refer to the specific products to determine the yardage required for COM textiles.
   Note: Yardage requirements are based on nondirectional, 54"-wide textiles. 66"-wide textiles are needed for application on 60"-wide products. Additional yardage may be needed due to the unique characteristics of a textile.
2. Obtain the COM ID# in Omni. If the color you are ordering does not have a COM ID# assigned, click "Create ID".
3. Enter your order on Order Manager in Omni.
4. Upon receipt of your purchase order, Herman Miller will send you a PO acknowledgment.
5. Arrangements must be made for the textiles to be shipped from the supplier to Herman Miller for application to the Herman Miller products. Textiles must be tagged with the assigned identification number and the roll yardage quantity. See Omni for shipping procedures and current shipping addresses or contact a COM representative at (616) 654 3400 or (866) 854 3048 ext 6543400.

   Products will be scheduled for production when COM textiles are received at Herman Miller. Standard lead times in effect at that time will apply.

   Note: If textiles are to be purchased directly by Herman Miller through the Supplier Connection program, Herman Miller will handle the ordering and shipping process and will schedule your order for production upon receipt of your purchase order (dependent on textile availability). Refer to the Supplier Connection program for more information.

Supplier Connection

Program Overview

The Supplier Connection program is a service offered by Herman Miller to purchase approved COM textiles directly from Maharam, Camira, C.F. Stinson, Guilford of Maine, Luna Textiles, Momentum Textiles and Ultrafabrics. When you select a textile through this program, Herman Miller will facilitate the ordering, scheduling, and shipment of the textile directly with the supplier.

Suppliers included in the Supplier Connection program keep an active inventory of textiles that are pre-approved for application to Herman Miller products. Pre-approval applies only to the suitability of a textile for manufacturing and application to a Herman Miller product. Omni provides an overview of fabrics that have been tested and indicates whether or not they were approved for application to Herman Miller products.

Specific information on the terms and conditions, testing, approval, and ordering process for the Supplier Connection program is listed below. Questions and requests for assistance may be directed to your COM representative at:
(616) 654 3400
(866) 854 3048 ext 6543400

Supplier Connection Warranty

Textiles purchased by Herman Miller through the Supplier Connection program are COM and are not warranted by Herman Miller. COM textiles are tested for application only; they are not tested for performance. The Herman Miller warranty does apply to the underlying products.

Suppliers of COM textiles are responsible for color consistency within commercial tolerances, UV stability, and resistance to soiling and perspiration.

Supplier Connection Pricing

Textiles purchased by Herman Miller through the Supplier Connection program are COM. COM is a Category 1 fabric. There are no application charges for COM fabrics.

Payment for textiles purchased by Herman Miller through the Supplier Connection program is the responsibility of the customer or dealer. Herman Miller will invoice the order at the supplier's prices published at the time of the order.

GSA

Textile Approval

1. Select a COM textile and a Herman Miller product.
2. If your textile does not show as tested in Omni, submit a request. You will be required to select a specific color of the textile and feature of the product to test, i.e., seat, back, etc.
3. Herman Miller will notify you of approval or disapproval within 4 days from receipt of the test yardage.

Ordering Products with Supplier Connection COM

1. Identify and include the following information on your purchase order:
   - Product number and option
   - Herman Miller's COM identification number
2. Enter your order on Order Manager in Omni.
3. Upon receipt of the purchase order, Herman Miller will process your order and send you a PO acknowledgment. Herman Miller will determine the yardage required to produce your product and will order and schedule for delivery the required textile. Standard lead times in effect at the time the textile is allocated at the supplier will apply to products ordered through this program.

Textiles Application Chart — Workspaces GSA

• *Available*

A *Assigned lead-time textile.*

A *Maharam textiles are on assigned lead times.*

See following page for exception notes.

		Action Office® Panels/Connectors	Action Office B-Style Tackboards	Action Office/Ethospace E-Style Storage	Ethospace Tiles/Connectors	Ethospace/Canvas Office Landscape® Privacy Doors	Canvas Tiles/Extended Width Tiles/Channel Tiles	Canvas B-/E-Style Storage	Canvas Tackboards	Canvas Metal Desk Hutch Back Panel	Canvas Vista™ Movable Insert and Display Unit	OE1 Boundary Agile Wall Tile	OE1 Boundary Project Board and Screens	OE1 Nook Liner/Felt Screen Liner/Storage Trolley Liner	Overlay™ Performance Wall Cladding	Pari™ Screens/Flat Edge Screens/Channel Screens	Renew™ Link Screens	Exclave® Tackable Boards and Stowage Tackable Backdrop	Exclave Video-Friendly Tackable Boards and Stowage Tackable Backdrop	Personal Side Screen	Tu® Wood Storage Cubby Tackboard	Seating
Price Category 1																						
COM	Customer's Own Material A	1	1	1	1	1	1	1	1	1	1	1	1		1	1	1	1		1	1	1
2V_ _	Chain	•	•	•	•	•	22	•	•	•	•		•		•	•	•				•	
8T_ _	Crossing (85_ _)	2	2	•	•	•	•	2	•	•		•	•		•	•	•	•	8		•	18
3DE_ _	Dex	6	2	•	•	•	•	2	•	•		•	•		•	•	•	•		•	•	•
2I_ _	Grasscloth	•	•	•	•	•	•	•	•	•	•		•		•	•	•			•	•	
1MN_ _	Monologue	2	2	•	•	•	•	2	•	•	•		•		•	•	•			•	•	•
5T_ _	Resonance	•	•	•	•	•	•	•	•	•	•				•					•	•	
4SC_ _	Scatter	2	2				•		•	•	•	•	•		•	•	•	•		•	•	•
22F_ _	Slant	6	•		•	•	•		•	•	•				•						•	
235_ _	Tailored	•		•	•	•	8	•	•	•	•				•						•	•
1WS_ _	Whisper	2	2	•	•	•	•	2	•	•	•	•	•		•	•	•	•		•	•	•
Price Category 2																						
3AR_ _	Aristo	2	2	•	•	•	•	2	•	•	•	•	•		•	•	•	•		•	•	•
51_ _	Cord	•	•	•	•	•	•	•	•	•	•				•						•	
92_ _	Crepe	2	•	•	•	•	•	•	•	•	•	•			•	•		•	8	•		•
3EP_ _	Epic	2	2	•	•	•	•	2	•	•		•	•		•	•	•	•		•	•	•
3DP_ _	Hint	•	•	•	•	•	•		•	•	•	•			•	•	•	•		•	•	•
4N_ _	Horizon	2	2	•	•	•	•	•	•	•	•				•	•				•	•	
1HA_ _	Medley	2	2	•	•	•	•	•	•	•	•	•	•		•	•	•	•	8	•		•
4ME_ _	Mellow	2	2	•	•	•	•	2	•	•	•	•	•		•	•	•	•		•	•	•
ZMA_ _	Metaphor - Maharam A	2	2	2	2	•	•	2	•		•	•			•	•		•				
8I1_ _	Muse - Maharam A	2	2	2	•		•	2	•		•	•	•		•	•	•	•		•		
3SL_ _	Sequel			2				2														•
4TE_ _	Terra	2	2	•	•	•	•	2	•	•	•	•	•		•	•	•	•		•	•	•
3TW_ _	Twine	•	•	•	21	•	•	•	•	•	•	•	•		•	•	•	•		•	•	
8R_ _	Twist (5S_ _)	5	2	•	•	•	•	2	•	•	•		•		•	•	•			•	•	18
Price Category 3																						
43Z_ _	Fractal	•	•	•	•	•	•	•	•	•	•	•	•		•	•	•	•		•	•	•
47_ _	Ground Cloth®	•	•	•	•	•	•	•	•	•	•	•	•		•	•	•	•	8	•	•	
ZM2_ _	Meld - Maharam A	2	2	•	•	•	•	•	•	•	•	•	•		•	•	•	•		•		
4GE_ _	Parcel	•	•	•	•	•	•	•	•	•	•	•	•		•	•	•	•		•	•	•
8W_ _	Strands	•	•	•	•	•	•	•	•	•			•		•	•	•			•	•	
Price Category 4																						
No fabrics available at this time.																						
Price Category 5																						
14A_ _	Hopsak	2	2	•	•		•	2	•	•	•	•			•			•			•	•
40G_ _	Method - Maharam A	2	2	2	2	•	•	2	•	•	•	•	•		•	•	•	•		•		
ZNC_ _	Nico - Maharam A	2	2	2	•	•	•	2	•	•	•	•	•		•	•	•	•		•		
Price Category 6																						
No fabrics available at this time.																						

continued on next page

Textiles Application Chart — Workspaces
GSA *continued*

• *Available*

[A] *Assigned lead-time textile.*
[A] *Maharam textiles are on assigned lead times.*
See following page for exception notes.

	Action Office® Panels/Connectors	Action Office B-Style Tackboards	Action Office/Ethospace E-Style Storage	Ethospace Tiles/Connectors	Ethospace/Canvas Office Landscape® Privacy Doors	Canvas Tiles/Extended Width Tiles/Channel Tiles	Canvas B-/E-Style Storage	Canvas Tackboards	Canvas Metal Desk Hutch Back Panel	Canvas Vista™ Movable Insert and Display Unit	OE1 Boundary Agile Wall Tile	OE1 Boundary Project Board and Screens	OE1 Nook Liner/Felt Screen Liner/Storage Trolley Liner	Overlay™ Performance Wall Cladding	Pari™ Screens/Flat Edge Screens/Channel Screens	Renew™ Link Screens	Exclave® Tackable Boards and Stowage Tackable Backdrop	Exclave Video-Friendly Tackable Boards and Stowage Tackable Backdrop	Personal Side Screen	Tu® Wood Storage Cubby Tackboard	Seating
Price Category A																					
No fabrics available at this time.																					
Price Category B																					
VM_ _ Medium - Maharam [A]		2				•	20	•	•	•				•							•
TL_ _ Messenger - Maharam [A] *		2	•	20	•	•	2	•	•	•				•	•						•
Price Category C																					
Z27_ _ Manner - Maharam [A]	2	2	2	•		•	2	•	•	•				•	•						
Z3_ _ Metric - Maharam [A]	2	2			•	•		•	•	•				•	•						
Price Category D																					
ZMD_ _Mode - Maharam [A]	2																•				•
ZS3_ _Spiral - Maharam [A]	•	•	•	•		•	•	•	•	•				•							
Price Category E																					
TT_ _ Parallel - Maharam [A]	7	•		•	•	•	17	•	•	•				•							
Price Category F																					
8EX_ _ Emit - Maharam [A]	2	2	2	•	•	•	2	•	•												
Price Category G-K																					
No fabrics available at this time.																					

** Available in select colors on 20-day lead-time.*
Refer to "Textile Colors" for 20-day colors.

1 *Refer to price book appendices and Omni for COM information.*
2 *Available on all products except 54" and 60" wide.*
3 *Not available on AO partial-glazed panels.*
4 *Not available on Action Office (AO®) acoustical panels.*
5 *(8R_ _), (8T_ _), (85_ _), and (5S_ _) not available on AO acoustical panels and not available on 54"- or 60"-wide products.*
6 *Not available on Action Office (AO®) connectors, cable management, and spacers.*
7 *Not available on AO acoustical panels; not available on AO2 cable management panel face.*
8 *Available in select colors. See the "Textile Colors" appendix.*
17 *Not available on Canvas E-style flipper doors.*
18 *Available on seating products in select colors. See the "Textile Colors" appendix.*
20 *Not available on Ethospace tackable tiles.*
21 *Not available on Ethospace connectors and cable management tiles.*
22 *Not available as railroaded application option for Chain and Moire on Canvas extended width tiles.*

Application Note: Herman Miller cannot guarantee material/pattern alignment in adjacent products. For example, a fabric's pattern may not align from one screen to the next, or from one panel to the next.

Textiles Application Chart — Seating GSA

• *Available*

[A] *Assigned lead-time textile.*

[A] *Maharam textiles are on assigned lead times.*

See following page for exception notes.

[N] *Non-woven textile.*

	Aeron® Chairs	Cosm™ Chairs	Mirra® 2 Chairs/Stools	Embody® Chairs	Fuld Nesting Chairs	Sayl® Work Chairs/Stools	Sayl Side Chairs	Setu® Chairs/Stools	Zeph® Chairs	Verus™ Work Chairs/Stools Back	Verus Work Chairs/Stools Seat	Verus Side Chairs Back	Verus Side Chairs Seat	Verus Plus Chairs	Aside® Chairs	Caper® Chairs/Stools	Lino™ Chairs Back	Lino Chairs Seat	OE1 Storage Trolley Cushion Top	Public® Office Landscape Back	Public Office Landscape Seat	Plex™ Lounge Furniture	Swoop™ Lounge Seating - Fully Upholstered	Swoop Lounge Seating - Plywood	Valor™ Seating	Cushion Tops	Workspaces
Price Category 1																											
COM Customer's Own Material [A]						1	1			1	1	1	1	1	1			1	1		1	1	1	1	1	1	1
231_ _ 8Z Pellicle®	•																										
1A7_ _ AireWeave 2			•																								
8T_ _ Crossing								•							•				•				•	•		•	•
3DE_ _ Dex						•	•	•		•	•	•	•	•	•				•		•	19	•		•	•	•
4RM_ _ Duo																	•										
6V_ _ Flexnet™																•											
845_ _ Intercept		•																									
4W_ _ Lyris 2™								•																			
1MN_ _ Monologue						25	23	•			•	•	•					•	•		•	•	•	•	•	•	•
5H2_ _ Ripple 3D Knit									•																		
4SC_ _ Scatter						•	•	•		•	•	•	•	•	•			•	•		•	•	•	•		•	•
5H1_ _ Splash 3D Knit									•																		
3DK_ _ Stretch Knit						22																					
235_ _ Tailored						•	•	•		•	•	•	•		•			•			•	24			•	7	•
9NK_ _ Tuck 3D Knit					•																						
1WS_ _ Whisper						25	•	•			•	•	•	•	•			•	•		•	•	•	•	•	•	•
Price Category 2																											
3AR_ _ Aristo						•	•	•		•	•	•	•	•	•			•	•		•	•	•		9	•	•
92_ _ Crepe						•	•	•		•	•	•	•	•	•			•	•		•	•	•	•	•	•	•
3EP_ _ Epic						•	•			•	•	•	•		•			•			•	•	•		•	7	•
3DP_ _ Hint						•	•				•		•	•	•			•			•			•	•	•	•
1MV_ _ Marvel [N]						22	23	•											•						•	•	
1HA_ _ Medley				•		•	23			•	•	•	•	•	•			•	•		•	•	•		•	•	•
4ME_ _ Mellow						•	23	•		•	•	•	•	•	•			•	•		•		•	•	•	•	•
ZMA_ _ Metaphor - Maharam [A]						16	16	•			•		•	•	•			•				•	•	•	•		
8I1_ _ Muse - Maharam [A]						16	16				•		•					•			•				26		
30_ _ Rhythm				24		•	•			•	•	•	•	•	•			•	•		•		•	•	•	•	
3SL_ _ Sequel [N]						27	27	27		27	27	27	27	27	8			27	•		•	•	•	•	•	•	•
4TE_ _ Terra						•	23			•	•	•	•	•	•			•			•		•	•	•	7	•
8R_ _ Twist						•	•	•		•	•	•	•	•	•			•	•		•	•	•	•	•	•	•
Price Category 3																											
3AC_ _ Ace						22	•			•	•	•	•	•	8			•	•		•	19			•	•	
43Z_ _ Fractal						•	•	•		•	•	•	•	•	•			•				•	•	•	•	•	•
8M_ _ Latitude™			24																								
4GE_ _ Parcel						•	•	•			•	•	•	•				•				•	•	•	•	•	•
Price Category 4																											
3DM_ _Daydream						22	•	•			•		•	•	•			•	•			•	•	•		•	•
3SY_ _ Sync				•		•	•	•		•	•	•	•		•			•			•	•	•	•	•	•	
Price Category 5																											
3CY_ _ Cozy						•	•	•		•	•	•	•	•	•			•			•	•	•	•	•	•	
14A_ _ Hopsak						•	•	•		•	•	•	•	•	•			•	•		•	•	•	•	•	•	•
40G_ _ Method - Maharam [A]						16	16	•		•	•	•	•	•				•	•		•	•	•		•	•	
ZNC_ _ Nico - Maharam [A]						•	•			•	•	•	•	•	•			•			•	•	•	•	•	•	
3SU_ _ Summit						•	•	•		•	•	•	•	•				•			•	•	•	•	•	•	

Continued on next page

Textiles Application Chart — Seating
GSA continued

• *Available*
A *Assigned lead-time textile.*
A *Maharam textiles are on assigned lead times.*
See following page for exception notes.
[N] *Non-woven textile.*

	Aeron® Chairs	Cosm™ Chairs	Mirra® 2 Chairs/Stools	Embody® Chairs	Fuld Nesting Chairs	Sayl® Work Chairs/Stools	Sayl Side Chairs	Setu® Chairs/Stools	Zeph® Chairs	Verus™ Work Chairs/Stools Back	Verus Work Chairs/Stools Seat	Verus Side Chairs Back	Verus Side Chairs Seat	Verus Plus Chairs	Aside® Chairs	Caper® Chairs/Stools	Lino™ Chairs Back	Lino Chairs Seat	OE1 Storage Trolley Cushion Top	Public® Office Landscape Back	Public Office Landscape Seat	Plex™ Lounge Furniture	Swoop™ Lounge Seating - Fully Upholstered	Swoop Lounge Seating - Plywood	Valor™ Seating	Cushion Tops	Workspaces
Price Category 6																											
35_ _ Balance				•																							
Price Category 7																											
COL Customer's Own Leather A	1														8				1							1	
Price Category 8																											
No fabrics available at this time																											
Price Category 9																											
ZGE_ _ Gemma - Maharam A						•	•	•		•	•	•	•	•	•			•			•	•	•	•	•	•	
ZJA_ _ Jasper - Maharam A						16	16				•		•	•	•			•			•				•	7	
21_ _ Leather [N]	24														8			•	•					•		•	
Price Category 10																											
3KH_ _ Firma - Maharam A						16		•		•	•	•	•	•	•			•			•	•	•	•	•	•	
ZGF_ _ Gemma Multi - Maharam A						•	•	•		•	•	•	•	•	•			•			•	•	•	•	•	•	
ZGF_ _ Gemma Multi Reverse - Maharam A						•	•	•		•	•	•	•	•	•			•			•	•	•	•	•	•	
ZP4_ _ Petra - Maharam A						16	16				•		•	•	•			•			•	•	•	•		•	
Price Category A																											
No fabrics available at this time.																											
Price Category B																											
TI_ _ Messenger - Maharam A *						•	•	•		•	•	•	•		•			•	•			•	•	•	26	•	
Price Category C																											
Z27_ _ Manner - Maharam A						•	•				•		•		•			•	•			•	•	•	•	•	
887_ _ Merit - Maharam A						•	•			•	•	•	•		•			•	•		•	•	•	•		•	
Z3_ _ Metric - Maharam A						•	•			•	•	•	•	•	•			•	•			•	•	•	•	•	
8EY_ _ Murmur - Maharam A						•	16				•		•		•			•			•	•	•		•	7	
Price Category D																											
8I8_ _ Bluff - Maharam [N] A						16	16			•	•	•	•	•	8						•	21		•	•	•	
Price Category E																											
No fabrics available at this time.																											
Price Category F																											
82T_ _ Apt [N] - Maharam A						18	•					•	•								•	•			•	7	
74M_ _ Instill [N] - Maharam A						18	16			•	•	•	•					•			•	•		•	•	7	
89N_ _ Keen - Maharam A						16	16				•		•	•	•			•			•	•	•	•			
V9G_ _ Ledger - Maharam A						18	16			•	•		•	•				•	•						•	•	
ZLL_ _ Loop - Maharam A						16	16				•		•		8			•			•				•		
8LW_ _ Pepper - Maharam A						16	16				•		•		•			•			•	21	•		9		
Z33_ _ Strum - Maharam [N] A							16																•		•	7	

Continued on next page

** Available in select colors on 20-day lead-time. Refer to "Textile Colors" for 20-day colors.*

Textiles Application Chart — Seating
GSA continued

• *Available*
[A] *Assigned lead-time textile.*
[A] *Maharam textiles are on assigned lead times.*
See following page for exception notes.
[N] *Non-woven textile.*

	Aeron® Chairs	Cosm™ Chairs	Mirra® 2 Chairs/Stools	Embody® Chairs	Fuld Nesting Chairs	Sayl® Work Chairs/Stools	Sayl Side Chairs	Setu® Chairs/Stools	Zeph® Chairs	Verus™ Work Chairs/Stools Back	Verus Work Chairs/Stools Seat	Verus Side Chairs Back	Verus Side Chairs Seat	Verus Plus Chairs	Aside® Chairs	Caper® Chairs/Stools	Lino™ Chairs Back	Lino Chairs Seat	OE1 Storage Trolley Cushion Top	Public® Office Landscape Back	Public Office Landscape Seat	Plex™ Lounge Furniture	Swoop™ Lounge Seating - Fully Upholstered	Swoop Lounge Seating - Plywood	Valor™ Seating	Cushion Tops	Workspaces
Price Category G																											
ZC2_ _ Compound - Maharam [N] [A]						16	16			•	•	•	•		8			•				•		•	•	7	
8AR_ _ Gild - Maharam [A]							16				•	•	•	•							•	21	•	•	•		
Price Category H																											
ZT_ _ Circles - Maharam [A]						16	16																			•	
ZK_ _ Dot Pattern - Maharam [A]						•	•	•			•		•		•				•						•	•	
ZL_ _ Small Dot Pattern - Maharam [A]						•	•	•			•		•		•				•						•	•	
Price Category I																											
7CW_ _ Cursive - Maharam [A]						16	16			•	•	•	•		8			•	•		•		•		•	•	
Price Category J-V																											
No fabrics available at this time.																											

Application Note: Herman Miller cannot guarantee material/pattern alignment in adjacent products. For example, a fabric's pattern may not align from one pedestal cushion top to the next, or from one chair to another.

1 *Refer to price book appendices and Omni for COM/COL information.*
7 *Available on 1" Cushion Tops only.*
8 *Only available on Aside non-upholstered outer back (PB) option.*
9 *Available on Valor upholstered seat only.*
16 *Available on Sayl Chair seat.*
18 *Available on Sayl Chair seat and upholstered mid-back.*
19 *Available on Plex seat only.*
20 *Not available on Plex Club Chair with Headrest.*
21 *Available on Plex seat and on ottoman.*
22 *Not available on Sayl upholstered back work chairs.*
23 *Not available on Sayl side chairs with upholstered backs.*
24 *Available in select colors. Refer to "Textile Colors" for color offering.*
25 *Not available on Sayl upholstered High-Back Work Chairs.*
26 *Available in select colors. Refer to "Textile Colors" for color offering.*
27 *Not available in 3SL15 Carbon Dark.*

Textile Colors

GSA

Price Category 1

Customer's Own Material

Ancillary/Seating/Workspaces
See Order Information in Appendices.
Assigned lead-time textile. A

8Z Pellicle®

Seating
For New Aeron® Chairs
56% elastomeric
44% polyester

23101	Mineral
23102	Carbon
23103	Graphite

AireWeave™ 2

Seating
For Mirra® 2 Chairs
67% elastomeric
33% antimony-free polyester

1A701	Alpine
1A702	Slate Grey
1A703	Graphite
1A704	Lime Green
1A706	Urban Orange
1A708	Twilight

Chain

Workspaces
66" wide
100% recycled polyester
with 12% ocean bound plastic

2V01	Pearl
2V02	Oyster
2V03	Wheat
2V04	Linen
2V05	Wicker
2V06	Bamboo
2V07	Sage
2V08	Spring Wood
2V09	Iceberg

Crossing

Seating/Workspaces
54" wide
86% antimony-free polyester
14% polyester

8T03	Wicker *
8T04	Porcelain *
8T05	Warm Grey *
8T10	Tomato
8T17	Cerulean
8T18	Indigo
8T19	Shale *
8T22	Tin *
8T23	Graphite
8T24	Black

Crossing

Workspaces
For systems products only.
54" wide
86% antimony-free polyester
14% polyester

8501	Ivory *
8502	Oyster *

* Crossing colors available on Exclave® Video-friendly Tackable Boards and Stowage Tackable Backdrop

Dex

Seating/Workspaces
54" wide
67% recycled polyester
33% polyester

3DE01	Frost
3DE02	Silver Pine
3DE03	Stone
3DE04	Shale
3DE05	Charcoal
3DE06	Gossamer
3DE07	Pine

Duo

Seating
For Lino™ Chairs
52% polyester
48% elastomeric

4RM01	Mineral
4RM02	Poppy
4RM03	Green Leaf
4RM04	Jade
4RM05	Shadow
4RM06	Graphite

Flexnet™

Seating
For Caper® Chairs
69% elastomeric
31% polyester

6V01	Black
6V02	Silver Grey

Grasscloth

Workspaces
66" wide
100% recycled polyester
with 11% ocean bound plastic

2I01	Silver Birch
2I02	Pampas
2I03	Sedge
2I07	Lea
2I08	Taro
2I09	Steam Grey
2I13	Gravel

Intercept

Seating
For Cosm™ Chairs
60% elastomeric
40% polyester

84501	Graphite
84502	Carbon
84503	Mineral
84504	Nightfall
84505	Glacier
84506	Canyon

Lyris 2™

Seating
For Setu® Chairs
74% elastomeric
26% polyester

4W21	Alpine
4W23	Chartreuse
4W25	Berry Blue
4W26	Slate Grey
4W28	Chino
4W31	Graphite

Monologue

Ancillary/Seating/Workspaces
54" wide
56% recycled polyester
44% polyester

1MN01	Linen
1MN02	Alabaster
1MN04	Folkstone
1MN05	Silver Pine
1MN06	Slate
1MN07	Seed
1MN09	Persimmon
1MN11	Meadow
1MN12	Blue Sky
1MN13	Blue Spruce
1MN14	Deep Sea

Price category 1 continued on next page

Price Category 1
continued

Resonance	
Workspaces	
66” wide	
100% polyester	
5T04	Greige
5T05	Porcelain
5T06	Alabaster
5T15	Iris
5T28	Sugar
5T47	Tobacco
5T54	Saltbush
5T57	Seed
5T58	Sepia
5T60	Iceberg
5T65	Red
5T68	Pistachio
5T71	Jade
5T72	Blue Green
5T74	Twilight

Ripple 3D Knit	
Seating	
Available only on Zeph® Chairs.	
knit to size	
99% recycled polyester	
1% lycra	
5H201	Black
5H202	Carbon
5H203	Alpine
5H204	Silt
5H205	Tea Rose
5H206	Cocoa
5H207	Persimmon
5H208	Blaze
5H209	Cayenne
5H210	Falcon
5H211	Mustard Seed
5H212	Patina
5H213	Olive
5H214	Moss
5H215	Aloe
5H216	Glacier
5H217	Ultramarine
5H218	Nightfall
5H219	Bluebell
5H220	Boysenberry
5H221	Nightfall/Bluebell
5H222	Patina/Alpine
5H223	Cayenne/Glacier
5H224	Tea Rose/Olive
5H225	Silt/Blaze

Scatter	
Ancillary/Seating/Workspaces	
54” wide	
100% recycled polyester,	
with 26% ocean bound plastic	
4SC01	Alpine
4SC02	Fog
4SC03	Shale
4SC04	Persimmon
4SC07	Olive
4SC08	Glacier
4SC09	Blue Sky
4SC10	Lagoon
4SC11	Slate Grey
4SC12	Blue Black

Slant	
Workspaces	
66” wide	
51% polyester	
49% recycled polyester	
22F04	Pesto
22F06	Neptune
22F07	Blueberry
22F10	Pumpkin
22F12	Silver Birch
22F13	Bluestone
22F15	Shale

Splash 3D Knit	
Seating	
Available only on Zeph® Chairs.	
knit to size	
98% recycled polyester	
2% lycra	
5H101	Black
5H102	Carbon
5H103	Alpine
5H104	Silt
5H105	Tea Rose
5H106	Cocoa
5H107	Persimmon
5H108	Blaze
5H109	Cayenne
5H110	Falcon
5H111	Mustard Seed
5H112	Patina
5H113	Olive
5H114	Moss
5H115	Aloe
5H116	Glacier
5H117	Ultramarine
5H118	Nightfall
5H119	Bluebell
5H120	Boysenberry

Stretch Knit	
Seating	
Assigned lead-time textile. A	
Available only on Sayl®	
Suspension Back Work Chairs	
97% polyester, 3% spandex	
3DK01	Fog
3DK02	Slate Grey
3DK03	Java
3DK04	Black
3DK05	Red
3DK06	Green Apple
3DK07	Berry Blue

Price category 1 continued on next page

Textile Colors

continued

GSA

Price Category 1

continued

Tailored

Seating/Workspaces
54” wide
56% polyester
44% recycled polyester

23501	Studio White * **
23502	Sugar **
23503	Tomato
23506	Chive
23508	Cobalt
23509	Cadet
23510	Fog
23511	Graphite
23512	Black
23513	Coffee

* Color not available on Canvas Tiles.
** Colors not available on Plex™ Lounge Furniture.

Tuck 3D Knit

Seating
Available only on Fuld Nesting Chairs.
knit to size
56% polyester
44% recycled polyester

9NK01	Alpine
9NK02	Carbon
9NK03	Nightfall
9NK04	Olive
9NK05	Cocoa
9NK06	Canyon

Whisper

Ancillary/Seating/Workspaces
54” wide
73% recycled polyester
27% polyester,
with 11.3% ocean bound plastic

1WS01	Sand Dollar
1WS02	Pebble
1WS03	Silver Birch
1WS04	Iceberg
1WS05	Silver Pine
1WS06	Carbon
1WS07	Cumin
1WS12	Willow
1WS13	Sea Grass
1WS14	Pool
1WS15	Blueberry
1WS16	Glacier
1WS17	Grey
1WS18	Canyon

Price Category 2

Aristo

Seating/Workspaces
54” wide
88% recycled polyester
12% polyester
Acrylic backing

3AR01	Forest Moss
3AR02	Light Brindle
3AR03	Mink
3AR04	Copper
3AR06	Cherry
3AR08	Green Apple
3AR10	Waterfall
3AR11	Cadet
3AR12	Tin
3AR13	Pewter
3AR14	Grey Brindle
3AR15	Grey Black

Cord

Workspaces
66” wide
51% antimony-free polyester
49% polyester

5101	Ivory
5102	White Ash
5103	Linen
5104	Bamboo
5105	Sepia
5107	Sesame
5109	Bayou
5111	Spring Wood
5112	Summer White

Price category 2 continued on next page

Crepe

Ancillary/Seating/Workspaces
54” wide
100% recycled polyester,
with 43.6% ocean bound plastic

9201	Licorice
9203	Smoke
9207	Cherry
9223	Cadet
9241	Beachglass
9249	Stone *
9251	Fog *
9252	Slate Grey
9261	Shale
9262	Graphite
9265	Mineral
9266	Persimmon
9267	Juniper
9268	Glacier
9269	Cascade
9270	Navy

* Colors available on Exclave® Video-friendly Tackable Boards and Stowage Tackable Backdrop

Epic

Seating/Workspaces
54” wide
56% recycled polyester
44% polyester
Acrylic backing

3EP01	Alabaster
3EP02	Smoke
3EP03	Falcon
3EP05	Copper
3EP06	Urban Orange
3EP07	Poppy
3EP10	Clover
3EP11	Loden
3EP14	Peacock
3EP15	Cadet
3EP16	Indigo
3EP17	Spring Wood
3EP18	Grey Brindle
3EP19	Seed
3EP20	Carbon Dark

Price Category 2
continued

Hint
Seating/Workspaces
54” wide
76% recycled polyester
24% polyester

3DP01	Sediment
3DP02	Gunmetal
3DP03	Silt
3DP04	Porcelain
3DP05	Indigo
3DP06	Fern
3DP07	Adobe
3DP08	Red Sea

Horizon
Workspaces
54” wide
65% antimony-free polyester
35% polyester

4N01	Rye Grass
4N02	Sugar Pine
4N03	Silver Pine
4N04	White Ash
4N05	Spring Wood
4N08	Haystack
4N09	Oat Grass
4N13	Pine Cone
4N15	Elderberry

Marvel
Seating
54” wide
100% pvc-free polyurethane

1MV01	Summer White
1MV02	Sand Dollar
1MV03	Espresso
1MV04	Folkstone Grey
1MV05	Graphite
1MV06	Onyx
1MV07	Polar Blue
1MV08	Blush Grey
1MV12	Red
1MV14	Pine
1MV15	Teal Green
1MV16	Twilight

Medley
Ancillary/Seating/Workspaces
54” wide
50% recycled polyester
50% polyester

1HA01	Stone *
1HA02	Trail
1HA03	Charcoal
1HA04	Cinder
1HA06	Papaya
1HA07	Chutney
1HA09	Feather Grey *
1HA11	Loden
1HA13	Bayou *
1HA14	Blue Grotto
1HA15	Blueberry
1HA22	Khaki
1HA23	Pewter
1HA24	Yellow Oxide
1HA25	Vintage Rose
1HA26	Raspberry
1HA27	Acai Berry

* Colors available on Exclave®
Video-friendly Tackable Boards
and Stowage Tackable Backdrop

Mellow
Seating/Workspaces
54” wide
100% recycled polyester,
with 16% ocean bound plastic

4ME01	Mineral
4ME04	Olive
4ME05	Glacier
4ME06	Oceanside
4ME07	Charcoal

Metaphor – Maharam
Ancillary/Seating/Workspaces
54” wide
100% polyester
Acrylic backing

ZMA01/466553-001	Afterfeather
ZMA02/466553-002	Moonflower
ZMA03/466553-003	Handcraft
ZMA04/466553-004	Crossroad
ZMA05/466553-005	Chondrite
ZMA06/466553-006	Detective
ZMA07/466553-007	Steamship
ZMA08/466553-008	Electricity
ZMA09/466553-009	Takeoff
ZMA10/466553-010	Parachute
ZMA11/466553-011	Blueshift
ZMA12/466553-012	Dockyard
ZMA13/466553-013	Bathe
ZMA14/466553-014	Icebound
ZMA15/466553-015	Thermosphere
ZMA16/466553-016	Aboard
ZMA17/466553-017	Agateware
ZMA18/466553-018	Homeland
ZMA19/466553-019	Rockfall
ZMA20/466553-020	Undergrowth
ZMA21/466553-021	Gremolata
ZMA22/466553-022	Patina
ZMA23/466553-023	Sylvan
ZMA24/466553-024	Outfield
ZMA25/466553-025	Windbreak
ZMA26/466553-026	Saguaro
ZMA27/466553-027	Barnwood
ZMA28/466553-028	Cookshop
ZMA29/466553-029	Amandine
ZMA30/466553-030	Bodhran
ZMA31/466553-031	Centerstage
ZMA32/466553-032	Focaccia
ZMA33/466553-033	Bumblebee
ZMA34/466553-034	Microbrew
ZMA35/466553-035	Sauna
ZMA36/466553-036	Gazebo
ZMA37/466553-037	Pirouette
ZMA38/466553-038	Heartbeat
ZMA39/466553-039	Shino
ZMA40/466553-040	Sunrise

Metaphor *continued*

ZMA41/466553-041	Florist
ZMA42/466553-042	Beadwork
ZMA43/466553-043	Framboise
ZMA44/466553-044	Wisteria
ZMA45/466553-045	Warrior

Muse – Maharam
Ancillary/Seating/Workspaces
54” wide
100% post-consumer recycled polyester

8I101/466487-001	Crescendo
8I102/466487-002	Resonate
8I103/466487-003	Runway
8I104/466487-004	Ascend
8I105/466487-005	Veil
8I106/466487-006	Refresh
8I107/466487-007	Clear
8I108/466487-008	Fantasy
8I109/466487-009	Miso
8I110/466487-010	Compass
8I111/466487-011	Bergamot
8I112/466487-012	Grasshopper
8I113/466487-013	Goal
8I114/466487-014	Mistletoe
8I115/466487-015	Seaglass
8I116/466487-016	Frigid
8I117/466487-017	Riverbend
8I118/466487-018	Noble
8I119/466487-019	Pulsar
8I120/466487-020	Velella
8I121/466487-021	Sailboat
8I122/466487-022	Sparse
8I123/466487-023	Vase
8I124/466487-024	Haven
8I125/466487-025	Mead
8I126/466487-026	Neat
8I127/466487-027	Jovial
8I128/466487-028	Theater
8I129/466487-029	Poinsettia
8I130/466487-030	Celebrate
8I131/466487-031	Spectacle

Price category 2 continued on next page

Price Category 2
continued

Rhythm	
Seating	
54” wide	
100% polyester	
3002	Green Apple
3004	Bayou
3005	Berry Blue
3006	Iris
3007	Twilight
3009	Poppy
3010	Molasses
3012	Khaki
3013	Mink
3014	Black *
3015	Charcoal *

* Colors available on Embody® Chair

Sequel	
Ancillary/Seating/Workspaces	
54” wide	
100% vinyl	
100% polyester knit backing	
Resilience® finish	
3SL01	White
3SL02	Pebble
3SL03	Mushroom
3SL04	Stone
3SL09	Seal
3SL10	Blue Fog
3SL11	Folkstone
3SL12	Shale
3SL13	Slate Grey
3SL14	Charcoal
3SL15	Carbon Dark
3SL28	Navy *

* Color available on Eames® Tandem Sling Seating

Terra	
Seating/Workspaces	
54” wide	
100% post-consumer recycled biodegradable polyester *	
4TE01	Spring Wood
4TE02	Zinc
4TE03	Pine Cone
4TE04	Charcoal

* 1% biodegradation in 1,278 days under ASTM D5511 conditions. No evidence of further degradation.

Twine	
Workspaces	
66” wide	
100% recycled polyester	
3TW01	Silver Birch
3TW02	Ivory
3TW03	Alabaster
3TW04	Bamboo
3TW05	Iceberg
3TW06	Charcoal
3TW07	Feather Grey
3TW08	Shale

Twist	
Ancillary/Seating/Workspaces	
54” wide	
80% antimony-free polyester	
13% recycled polyester	
7% polyester	
8R05	Wicker
8R10	Poppy
8R14	Tin
8R15	Shale
8R16	Graphite
8R17	Birch
8R18	Sepia
8R22	Blueberry
8R23	Green Apple
8R26	Gunmetal
8R27	Cinder
8R29	Pekoe
8R33	Forest
8R35	Waterfall
8R36	Midnight Blue
8R37	Carbon Dark

Twist	
Workspaces	
For systems products only.	
54” wide	
80% antimony-free polyester	
13% recycled polyester	
7% polyester	
5S03	Oyster

Price Category 3

Ace	
Ancillary/Seating	
54” wide	
100% polyurethane	
Polyester knit backing	
Stain resistant finish	
3AC01	Summer White
3AC02	White Ash
3AC04	Metal
3AC05	Clay
3AC06	Chestnut
3AC08	Camelback
3AC09	Chipotle
3AC12	Artichoke
3AC13	Sepia Dark
3AC14	Aloe
3AC17	Oceanside
3AC18	Midnight
3AC20	Frost
3AC21	Lead
3AC22	Black

Fractal	
Ancillary/Seating/Workspaces	
58” wide	
84% recycled polyester	
16% polyester	
43Z01	Granite
43Z02	Golden Olive
43Z03	Verdant
43Z04	Cadet

Price category 3 continued on next page

Price Category 3
continued

Price Category 4

Ground Cloth®

Workspaces
66” wide
100% polyester

4701	Vapor Grey
4721	Warm White *
4722	Fog *
4723	Straw *
4724	Red Orange *
4726	Green Apple *
4727	Caribbean *
4728	Midnight *
4729	Cappuccino *

* Colors available on Exclave® Video-friendly Tackable Boards and Stowage Tackable Backdrop

Latitude

Seating
Colors for Mirra 2 Chairs
100% polyester

8M10	Alpine
8M17	Black
8M21	Slate Grey
8M26	Twilight

Meld – Maharam

Workspaces
54” wide
68% post-consumer recycled polyester
32% polyester
PFOA-Free stain resistant

ZM201/466387-201	Vast
ZM202/466387-202	Panda **
ZM203/466387-203	Skyline *
ZM204/466387-204	Knight **
ZM205/466387-205	Quill **
ZM206/466387-206	Pipe
ZM207/466387-207	Grate *
ZM208/466387-208	Gloss
ZM209/466387-209	Bulb
ZM210/466387-210	Bride
ZM211/466387-211	Stark
ZM212/466387-212	Seashell
ZM213/466387-213	Antler

Meld *continued*

ZM214/466387-214	Crater *
ZM215/466387-215	Perennial
ZM216/466387-216	Mulberry
ZM217/466387-217	Fuchsia *
ZM218/466387-218	Amethyst *
ZM219/466387-219	Merlot
ZM220/466387-220	Magma *
ZM221/466387-221	Rooster
ZM222/466387-222	Heat *
ZM223/466387-223	Clementine
ZM224/466387-224	Fox
ZM225/466387-225	Kiss *
ZM226/466387-226	Bare
ZM227/466387-227	Blonde
ZM228/466387-228	Mimosa
ZM229/466387-229	Comet *
ZM230/466387-230	Honeydew
ZM231/466387-231	Wild *
ZM232/466387-232	Vine
ZM233/466387-233	Seed
ZM234/466387-234	Kale *
ZM235/466387-235	Waterfall *
ZM236/466387-236	Nordic *
ZM237/466387-237	Reef *
ZM238/466387-238	Wave
ZM239/466387-239	Isle **
ZM240/466387-240	Creek
ZM241/466387-241	Mariner *
ZM242/466387-242	Globe
ZM243/466387-243	Spa

* Colors available on 20-day lead time.
** Colors available on 10-day lead time.

Parcel

Ancillary/Seating/Workspaces
54” wide
100% recycled polyester

4GE01	Gunmetal
4GE02	Brindle
4GE03	Bayou
4GE04	Pesto
4GE05	Golden Olive
4GE06	Copper Sea

Strands

Workspaces
66” wide
100% recycled polyester

8W01	Pebble
8W02	Porcelain
8W04	Honey
8W05	Khaki
8W06	Rye
8W07	Wicker
8W08	Tin
8W09	Cool Grey

Cygnus

Ancillary
For Eames® Aluminum Group Chairs
69% elastomeric
31% polyester

5401	Black
5402	Zinc
5403	Quartz

Daydream

Seating
54” wide
48% wool
41% recycled polyester
9% nylon
2% polyester

3DM01	Rye Grass
3DM02	Silver Birch
3DM03	Pewter
3DM04	Graphite
3DM05	Black
3DM06	Lemongrass
3DM07	Permission
3DM08	Juniper
3DM09	Sea Grass
3DM10	Nightfall

Kalista - Geiger Textile

Ancillary
54” wide
71% post-industrial recycled cotton
18% post-industrial recycled polyester
11% polyester
PFOA-Free stain resistant finish

1AL01	Cotton
1AL02	Natural
1AL03	Titanium
1AL04	Pewter
1AL05	Starry Night
1AL06	Red Hot
1AL07	Sun Kissed
1AL08	Dune
1AL09	Beach Glass
1AL10	Bluestone
1AL11	Seaside
1AL12	Night Sky

Price category 4 continued on next page

GSA

Price Category 4
continued

Price Category 5

Lariat – Maharam	
Ancillary/Seating	
54” wide	
100% vinyl	
ZLR01/440401-001	001
ZLR02/440401-002	002
ZLR04/440401-004	004
ZLR06/440401-006	006
ZLR07/440401-007	007
ZLR08/440401-008	008
ZLR10/440401-010	010
ZLR11/440401-011	011
ZLR13/440401-013	013
ZLR14/440401-014	014
ZLR15/440401-015	015
ZLR16/440401-016	016
ZLR18/440401-018	018
ZLR20/440401-020	020
ZLR21/440401-021	021
ZLR24/440401-024	024
ZLR25/440401-025	025
ZLR26/440401-026	026
ZLR28/440401-028	028
ZLR31/440401-031	031
ZLR32/440401-032	032
ZLR33/440401-033	033
ZLR34/440401-034	034
ZLR38/440401-038	038
ZLR39/440401-039	Granite
ZLR40/440401-040	Linen
ZLR41/440401-041	Stella
ZLR42/440401-042	Saddle
ZLR43/440401-043	Holly
ZLR44/440401-044	Maroon
ZLR45/440401-045	Siren
ZLR46/440401-046	Reseda
ZLR47/440401-047	Purslane
ZLR48/440401-048	Spire
ZLR49/440401-049	Papyrus
ZLR50/440401-050	Chickadee
ZLR51/440401-051	Requiem

Sync	
Seating	
55” wide	
100% polyester	
3SY01	Pine Cone
3SY03	Canyon
3SY04	Truffle
3SY06	Everglade
3SY08	Nightfall
3SY09	Dark Mineral
3SY10	Slate Grey
3SY11	Dark Carbon
3SY12	Black

Cozy	
Seating	
54” wide	
100% wool	
3CY01	Heathered Warm Grey
3CY02	Heathered Rye Grass
3CY03	Heathered Cool Grey
3CY05	Heathered Black
3CY06	Heathered Persimmon
3CY07	Heathered Loden
3CY09	Heathered Lagoon
3CY10	Heathered Twilight

Hopsak	
Ancillary/Seating/Workspaces	
56” wide	
100% recycled polyester	
14A20	Black
14A22	Raw Umber Dark
14A26	Grey Blue Dark
14A30	Sepia Dark
14A38	Emerald Dark
14A39	Yellow Dark
14A40	Orange
14A41	Sienna
14A42	Olive Green Dark
14A43	Crimson
14A44	Crimson Dark Dark
14A45	Violet Dark
14A46	Pink Dark Dark
14A47	Ultramarine Dark
14A48	Cobalt Blue
14A49	Terra Cotta
14A50	Ochre Dark

Ingenue - Geiger Textile	
Ancillary	
54” wide	
28% wool	
26% viscose	
25% acrylic	
16% polyester	
5% cotton	
PFOA-Free stain resistant finish	
1GH01	Sand
1GH02	Fog
1GH03	Flannel
1GH04	Trench
1GH05	Vermillion
1GH06	Adriatic
1GH07	Umber
1GH08	Charcoal

Method – Maharam	
Seating/Workspaces	
54” wide	
100% recycled polyester	
with 12% ocean-bound plastic	
40G01/466579-001	Inspire
40G02/466579-002	Rhea
40G03/466579-003	Noise
40G04/466579-004	Speedway
40G05/466579-005	Villanelle
40G06/466579-006	Maestro
40G07/466579-007	Destiny
40G08/466579-008	Possess
40G09/466579-009	Waterside
40G10/466579-010	Relax
40G11/466579-011	Delightful
40G12/466579-012	Parrotlet
40G13/466579-013	Verdurous
40G14/466579-014	Bosky
40G15/466579-015	Acreage
40G16/466579-016	Allude
40G17/466579-017	Tweed
40G18/466579-018	Korma
40G19/466579-019	Fossilize
40G20/466579-020	Cattail

Price category 5 continued on next page

Price Category 5
continued

Price Category 6

Price Category 7

Method *continued*

40G21/466579-021	Shortcake
40G22/466579-022	Racecar
40G23/466579-023	Courtship
40G24/466579-024	Jam
40G25/466579-025	Sparrow

Nico - Maharam

Seating/Workspaces
54” wide
63% wool
21% polyester
16% solution-dyed nylon

ZNC01/466564-001	Alcazar
ZNC02/466564-002	Ironclad
ZNC03/466564-003	Tune
ZNC04/466564-004	Bridegroom
ZNC05/466564-005	Diode
ZNC06/466564-006	Jest
ZNC07/466564-007	Sanctuary
ZNC08/466564-008	Aquarius
ZNC09/466564-009	Houseboat
ZNC10/466564-010	Olympian
ZNC11/466564-011	Tennis
ZNC12/466564-012	Dressage
ZNC13/466564-013	Zing
ZNC14/466564-014	Bitterroot
ZNC15/466564-015	Gemini
ZNC16/466564-016	Posh
ZNC17/466564-017	Sizzle
ZNC18/466564-018	Cheerful
ZNC19/466564-019	Watermelon
ZNC20/466564-020	Toucan
ZNC21/466564-021	Rosin
ZNC22/466564-022	Jousting
ZNC23/466564-023	Jojoba
ZNC24/466564-024	Dromedary
ZNC25/466564-025	Toasty
ZNC26/466564-026	Casaba
ZNC27/466564-027	Greenhouse
ZNC28/466564-028	Sibyl
ZNC29/466564-029	Spearmint
ZNC30/466564-030	Pothos
ZNC31/466564-031	Calathea
ZNC32/466564-032	Landscape
ZNC33/466564-033	Espalier
ZNC34/466564-034	Gecko
ZNC35/466564-035	Meditation

Summit

Ancillary/Seating
54” wide
100% silicone
Polyester knit backing

3SU02	Oyster
3SU03	Zinc
3SU04	Sparrow
3SU07	Black
3SU09	Beachglass
3SU10	Midnight

Balance

Seating
For Embody® chairs
100% polyester

3512	Carbon
3513	Black

Outdoor Weave

Ancillary
For Eames® Aluminum Group Outdoor Chairs
50% elastomeric
50% polypropylene

7203	Lead
7205	Graphite

Customer’s Own Leather

Seating/Ancillary
See Order Information in Appendices. Assigned lead-time textile. A

Beck – Maharam

Seating
55” wide
78% wool
22% nylon

ZB301/466571-001	Overshadow
ZB302/466571-002	Molecule
ZB303/466571-003	Zeitgeist
ZB304/466571-004	Blacksmith
ZB305/466571-005	Cornerstone
ZB306/466571-006	Chainmail
ZB307/466571-007	Buckram
ZB308/466571-008	Callisto
ZB309/466571-009	Interlude
ZB310/466571-010	Letterpress
ZB311/466571-011	Memoir
ZB312/466571-012	Litmus
ZB313/466571-013	Stoic
ZB314/466571-014	Inkpad
ZB315/466571-015	Praxis
ZB316/466571-016	Astute
ZB317/466571-017	Percolate
ZB318/466571-018	Halocline
ZB319/466571-019	Semblance
ZB320/466571-020	Loch
ZB321/466571-021	Lido
ZB322/466571-022	Underwater
ZB323/466571-023	Tetrapod
ZB324/466571-024	Nymph
ZB325/466571-025	Appalachian

Price category 7 continued on next page

Price Category 7
continued

Beck *continued*		
ZB326/466571-026	Menthol	
ZB327/466571-027	Woodruff	
ZB328/466571-028	Malachite	
ZB329/466571-029	Botanist	
ZB330/466571-030	Woodlet	
ZB331/466571-031	Katydid	
ZB332/466571-032	Exuberant	
ZB333/466571-033	Retrospect	
ZB334/466571-034	Lambic	
ZB335/466571-035	Argil	
ZB336/466571-036	Brushstroke	
ZB337/466571-037	Candescent	
ZB338/466571-038	Reedbuck	
ZB339/466571-039	Clayware	
ZB340/466571-040	Curio	
ZB341/466571-041	Whimsy	
ZB342/466571-042	Effervescent	
ZB343/466571-043	Lingonberry	
ZB344/466571-044	Resplendent	
ZB345/466571-045	Hollyhock	
ZB346/466571-046	Filigree	
ZB347/466571-047	Plutonic	
ZB348/466571-048	Foundry	
ZB349/466571-049	Patisserie	
ZB390	Gold	007/032/033 *
ZB391	Russet	036/040/039 *
ZB392	Indigo	008/013/014 *
ZB393	Forest	006/031/028 *

* Colors available only on Girard Color Wheel Ottoman.

Capri - Geiger Textile	
Ancillary	
55” wide	
36% cotton	
32% acrylic	
24% rayon	
8% polyester	
PFOA-Free stain resistant finish	
Acrylic backing	
17201	Snow
17202	Stone
17203	Trench
17204	Graphite
17205	Anthracite
17206	Light Silver
17207	Russet
17208	Chestnut Brown
17209	Sand
17210	Sterling
17211	Cobalt
17212	Ink

Milaner - Geiger Textile	
Ancillary	
55” wide	
56% wool, 10% acrylic	
10% alpaca, 10% cotton	
8% nylon, 6% rayon	
17101	Linen
17102	Flax
17103	Bark
17104	Deep Navy
17105	Charcoal
17106	Medium Grey
17107	Ash
17108	Crimson

Price Category 8

Luce - Maharam	
Seating	
59” wide	
75% post-consumer recycled wool	
20% polyester	
5% nylon	
ZLU01/466566-001	Brioche
ZLU02/466566-002	Blanched
ZLU03/466566-003	Relic
ZLU04/466566-004	Sinter
ZLU05/466566-005	Scoria
ZLU06/466566-006	Austere
ZLU07/466566-007	Pigment
ZLU08/466566-008	Alkali
ZLU09/466566-009	Tidal
ZLU10/466566-010	Imbue
ZLU11/466566-011	Reservoir
ZLU12/466566-012	Brine
ZLU13/466566-013	Undertone
ZLU14/466566-014	Prelude
ZLU15/466566-015	Submerge
ZLU16/466566-016	Cypress
ZLU17/466566-017	Awash
ZLU18/466566-018	Adriatic
ZLU19/466566-019	Province
ZLU20/466566-020	Virescent
ZLU21/466566-021	Nettle
ZLU22/466566-022	Agrarian
ZLU23/466566-023	Serpentine
ZLU24/466566-024	Laurel
ZLU25/466566-025	Clarion
ZLU26/466566-026	Gooseberry
ZLU27/466566-027	Swelter
ZLU28/466566-028	Etruscan
ZLU29/466566-029	Coulis
ZLU30/466566-030	Rubescent
ZLU31/466566-031	Akoya
ZLU32/466566-032	Radiant
ZLU33/466566-033	Regent
ZLU34/466566-034	Spectral
ZLU35/466566-035	Thistle

Price Category 9

Gemma – Maharam	
Seating	
55” wide	
85% wool	
15% nylon	
ZGE01/466568-001	Crinoline
ZGE02/466568-002	Angelic
ZGE03/466568-003	Savory
ZGE04/466568-004	Honeycomb
ZGE05/466568-005	Gilded
ZGE06/466568-006	Paddleboat
ZGE07/466568-007	Stagecoach
ZGE08/466568-008	Waterbuck
ZGE09/466568-009	Earnest
ZGE10/466568-010	Auric
ZGE11/466568-011	Carmine
ZGE12/466568-012	Serape
ZGE13/466568-013	Ferric
ZGE14/466568-014	Canyon
ZGE15/466568-015	Alembic
ZGE16/466568-016	Patio
ZGE17/466568-017	Sorrel
ZGE18/466568-018	Root
ZGE19/466568-019	Mansion
ZGE20/466568-020	Buff
ZGE21/466568-021	Starch
ZGE22/466568-022	Dawn
ZGE23/466568-023	Countryside
ZGE24/466568-024	Dewy
ZGE25/466568-025	Reliquary
ZGE26/466568-026	Deluge
ZGE27/466568-027	Overlay
ZGE28/466568-028	Electron
ZGE29/466568-029	Sheath
ZGE30/466568-030	Quietude
ZGE31/466568-031	Jargon
ZGE32/466568-032	Powder
ZGE33/466568-033	Tide
ZGE34/466568-034	Outwash
ZGE35/466568-035	Enamored
ZGE36/466568-036	Smitten
ZGE37/466568-037	Revere
ZGE38/466568-038	Mangosteen
ZGE39/466568-039	Allium
ZGE40/466568-040	Immense

Price category 9 continued on next page

Price Category 9
continued

Gemma *continued*	
ZGE41/466568-041	Chamber
ZGE42/466568-042	Cosmos
ZGE43/466568-043	Inkling
ZGE44/466568-044	Rainwater
ZGE45/466568-045	Shade
ZGE46/466568-046	Pendant
ZGE47/466568-047	Axial
ZGE48/466568-048	Fervent
ZGE49/466568-049	Legacy
ZGE50/466568-050	Caliber
ZGE51/466568-051	Temple
ZGE52/466568-052	Evenfall

Jasper - Maharam	
Seating	
53” wide	
55% wool	
27% solution-dyed nylon	
18% cotton	
ZJA01/466563-001	Thrill
ZJA02/466563-002	Anise
ZJA03/466563-003	Grapefruit
ZJA04/466563-004	Lifeguard
ZJA05/466563-005	Heartfelt
ZJA06/466563-006	Corsage
ZJA07/466563-007	Earthenware
ZJA08/466563-008	Bear
ZJA09/466563-009	Firelight
ZJA10/466563-010	Dreamcatcher
ZJA11/466563-011	Bobcat
ZJA12/466563-012	Glacial
ZJA13/466563-013	Vaporize
ZJA14/466563-014	Trapdoor
ZJA15/466563-015	Halcyon
ZJA16/466563-016	Observatory
ZJA17/466563-017	Steamboat
ZJA18/466563-018	Aquathlon
ZJA19/466563-019	Cloudless
ZJA20/466563-020	Briny
ZJA21/466563-021	Magical
ZJA22/466563-022	Picnic
ZJA23/466563-023	Herbage
ZJA24/466563-024	Pasture
ZJA25/466563-025	Courtyard
ZJA26/466563-026	Leapfrog

Leather	
Ancillary/Seating	
approx. 50 sq. ft. per hide	
100% leather	
2101	Ivory
2109	Black *
2110	Smoke
2111	Graphite
2112	Khaki
2113	Rattan
2114	Truffle
2115	Alpine
2116	Haze
2117	Sable Grey
2118	Dark Mineral **
2119	Dark Carbon ***
2120	Cranberry
2121	Deep Sea

* Armpad color available on Aeron® Chair, Graphite.
** Armpad color available on Aeron Chair, Mineral.
*** Armpad color available on Aeron Chair, Carbon.

Price Category 10

Bristol Leather - Geiger Textile	
Ancillary	
approx. 55 sq. ft. per hide	
100% leather	
5-507	Black
5-511	Putty
5-519	Hunter
5-520	White
5-521	Ivory
5-522	Parchment
5-537	Caribbean
5-546	Pumice
5-547	Smoke
5-548	Charcoal
5-549	Dark Shale
5-556	Downtown Grey
5-557	City Night
5-559	Ash Grey
5-563	Champagne
5-564	Chestnut Brown
5-565	Dark Sienna
5-566	Earthen
5-567	Desert
5-568	British Green
5-579	Paris Blue
5-583	Atlantic
5-592	Camel
5-594	Taupe
5-597	Pure
5-598	Cream
5-600	Midnight Blue
5-603	Sangria
5-604	Swiss Red
5-605	Nordic Yellow
5-606	Sky Grey
5-608	Natural

Firma – Maharam	
Seating	
55” wide	
78% wool	
22% nylon	
3KH01/466582-001	Wrath
3KH02/466582-002	Pantomime
3KH03/466582-003	Shaded
3KH04/466582-004	Prologue
3KH05/466582-005	Framework
3KH06/466582-006	Railroad
3KH07/466582-007	Grommet
3KH08/466582-008	Lunisolar
3KH09/466582-009	Snowpack
3KH10/466582-010	Coldsnap
3KH11/466582-011	Sealift
3KH12/466582-012	Brood
3KH13/466582-013	Intertidal
3KH14/466582-014	Confide
3KH15/466582-015	Secluded
3KH16/466582-016	Leisure
3KH17/466582-017	Portfolio
3KH18/466582-018	Strato
3KH19/466582-019	Fogbow
3KH20/466582-020	Snowcone
3KH21/466582-021	Kazoo
3KH22/466582-022	Esteem
3KH23/466582-023	Mackerel
3KH24/466582-024	Brooch
3KH25/466582-025	Caesious
3KH26/466582-026	Islet
3KH27/466582-027	Biosphere
3KH28/466582-028	Hilltop
3KH29/466582-029	Arboreal
3KH30/466582-030	Lineage
3KH31/466582-031	Comfrey
3KH32/466582-032	Circe
3KH33/466582-033	Ecosystem
3KH34/466582-034	Knack
3KH35/466582-035	Watt
3KH36/466582-036	Epiphany
3KH37/466582-037	Gamma
3KH38/466582-038	Taxicab
3KH39/466582-039	Varietal

Price category 10 continued on next page

Price Category 10
continued

Gemma Multi – Maharam	
Seating	
55” wide	
85% wool	
15% nylon	
ZGF01/466569-001	Andromeda
ZGF02/466569-002	Dappled
ZGF03/466569-003	Lyra
ZGF04/466569-004	Flaunt
ZGF05/466569-005	Celluloid
ZGF06/466569-006	Hydrozoa
ZGF07/466569-007	Firefly
ZGF08/466569-008	Pisces
ZGF09/466569-009	Strath
ZGF10/466569-010	Erosion
ZGF11/466569-011	Cabaret
ZGF12/466569-012	Candytuft
ZGF13/466569-013	Juice
ZGF14/466569-014	Fairground
ZGF15/466569-015	Copperplate
ZGF16/466569-016	Sunbird
ZGF17/466569-017	Cinematic
ZGF18/466569-018	Clairvoyant
ZGF19/466569-019	Crocus
ZGF20/466569-020	Memoir
ZGF21/466569-021	Roulette
ZGF22/466569-022	Voltaic
ZGF23/466569-023	Compote
ZGF24/466569-024	Lambent
ZGF25/466569-025	Twister
ZGF26/466569-026	Chronicle
ZGF27/466569-027	Sidereal
ZGF28/466569-028	Tanzanite
ZGF29/466569-029	Crystalize
ZGF30/466569-030	Chromium
ZGF31/466569-031	Pallium
ZGF32/466569-032	Spectre
ZGF33/466569-033	Courgette
ZGF34/466569-034	Viper
ZGF35/466569-035	Sunlit
ZGF36/466569-036	Heavenly
ZGF37/466569-037	Vernal
ZGF38/466569-038	Cress
ZGF39/466569-039	Limn
ZGF40/466569-040	Horseradish

Gemma Multi *continued*	
ZGF41/466569-041	Shandy
ZGF42/466569-042	Granary
ZGF43/466569-043	Percolate
ZGF44/466569-044	Motor
ZGF45/466569-045	Unicorn
ZGF46/466569-046	Lobster
ZGF47/466569-047	Rhododendron
ZGF48/466569-048	Taffy
ZGF49/466569-049	Rishi
ZGF50/466569-050	Backcountry
ZGF51/466569-051	Buckthorn
ZGF52/466569-052	Coniferous
ZGF53/466569-053	Delphic
ZGF54/466569-054	Hieroglyph
ZGF55/466569-055	Eiderdown
ZGF56/466569-056	Sandbar
ZGF57/466569-057	Tanager

Gemma Multi Reverse – Maharam	
Seating	
55” wide	
85% wool	
15% nylon	
ZGF58/466569-101	Andromeda Reverse
ZGF59/466569-102	Dappled Reverse
ZGF60/466569-103	Lyra Reverse
ZGF61/466569-104	Flaunt Reverse
ZGF62/466569-105	Celluloid Reverse
ZGF63/466569-106	Hydrozoa Reverse
ZGF64/466569-107	Firefly Reverse
ZGF65/466569-108	Pisces Reverse
ZGF66/466569-109	Strath Reverse
ZGF67/466569-110	Erosion Reverse

Gemma Multi Reverse *continued*	
ZGF68/466569-111	Cabaret Reverse
ZGF69/466569-112	Candytuft Reverse
ZGF70/466569-113	Juice Reverse
ZGF71/466569-114	Fairground Reverse
ZGF72/466569-115	Copperplate Reverse
ZGF73/466569-116	Sunbird Reverse
ZGF74/466569-117	Cinematic Reverse
ZGF75/466569-118	Clairvoyant Reverse
ZGF76/466569-119	Crocus Reverse
ZGF77/466569-120	Memoir Reverse
ZGF78/466569-121	Roulette Reverse
ZGF79/466569-122	Voltaic Reverse
ZGF80/466569-123	Compote Reverse
ZGF81/466569-124	Lambent Reverse
ZGF82/466569-125	Twister Reverse
ZGF83/466569-126	Chronicle Reverse
ZGF84/466569-127	Sidereal Reverse
ZGF85/466569-128	Tanzanite Reverse
ZGF86/466569-129	Crystalize Reverse
ZGF87/466569-130	Chromium Reverse
ZGF88/466569-131	Pallium Reverse
ZGF89/466569-132	Spectre Reverse

Gemma Multi Reverse *continued*	
ZGF90/466569-133	Courgette Reverse
ZGF91/466569-134	Viper Reverse
ZGF92/466569-135	Sunlit Reverse
ZGF93/466569-136	Heavenly Reverse
ZGF94/466569-137	Vernal Reverse
ZGF95/466569-138	Cress Reverse
ZGF96/466569-139	Limn Reverse
ZGF97/466569-140	Horseradish Reverse
ZGF98/466569-141	Shandy Reverse
ZGF99/466569-142	Granary Reverse
ZGFA0/466569-143	Percolate Reverse
ZGFA1/466569-144	Motor Reverse
ZGFA2/466569-145	Unicorn Reverse
ZGFA3/466569-146	Lobster Reverse
ZGFA4/466569-147	Rhododendron Reverse
ZGFA5/466569-148	Taffy Reverse
ZGFA6/466569-149	Rishi Reverse
ZGFA7/466569-150	Backcountry Reverse
ZGFA8/466569-151	Buckthorn Reverse
ZGFA9/466569-152	Coniferous Reverse
ZGFB0/466569-153	Delphic Reverse

Price category 10 continued on next page

Price Category 10
continued

Gemma Multi Reverse *continued*

ZGFB1/466569-154	Hieroglyph Reverse
ZGFB2/466569-155	Eiderdown Reverse
ZGFB3/466569-157	Tanager Reverse

Petra - Maharam

Seating
55” wide
70% wool
19% linen
11% nylon

ZP401/466580-001	Hieroglyph
ZP402/466580-002	Interior
ZP403/466580-003	Samovar
ZP404/466580-004	Calcite
ZP405/466580-005	Silversmith
ZP406/466580-006	Rivet
ZP407/466580-007	Carpolite
ZP408/466580-008	Bonbon
ZP409/466580-009	Dreamy
ZP410/466580-010	Bejewel
ZP411/466580-011	Sashimi
ZP412/466580-012	Spirula
ZP413/466580-013	Chalet
ZP414/466580-014	Reindeer
ZP415/466580-015	Nostalgia
ZP416/466580-016	Trove
ZP417/466580-017	Narcissus
ZP418/466580-018	Yurt
ZP419/466580-019	Congee
ZP420/466580-020	Genepy
ZP421/466580-021	Herbaceous
ZP422/466580-022	Paddock
ZP423/466580-023	Precious
ZP424/466580-024	Biome
ZP425/466580-025	Tinted
ZP426/466580-026	Pelagic
ZP427/466580-027	Bluebill
ZP428/466580-028	Chicory
ZP429/466580-029	Eaglet
ZP430/466580-030	Permafrost
ZP431/466580-031	Atlantic
ZP432/466580-032	Airstream
ZP433/466580-033	Debonair

Price Category 11

Prone Leather - Maharam

Ancillary
approx. 50 sq. ft. per hide
100% leather
protective top coat

1NX01/700020-001	Lotus
1NX02/700020-002	Timbre
1NX03/700020-003	Essence
1NX04/700020-004	Script
1NX05/700020-005	Gambit
1NX06/700020-006	Obsidian
1NX07/700020-007	Sail
1NX09/700020-009	Vine
1NX10/700020-010	Yarrow
1NX13/700020-013	Balsa
1NX14/700020-014	Shore
1NX15/700020-015	Bricolage
1NX17/700020-017	Ledge
1NX19/700020-019	Mantra
1NX20/700020-020	Java
1NX21/700020-021	Lute
1NX22/700020-022	Glow
1NX23/700020-023	Hickory

Price Category A

No fabrics available at this time.

Price Category B

Medium – Maharam

Seating/Workspaces
54” wide
100% polyester

VM01/463490-001	Raven
VM02/463490-002	Smoke
VM03/463490-003	Alloy
VM04/463490-004	Flax
VM07/463490-007	Espresso
VM14/463490-014	Laser
VM16/463490-016	Port
VM22/463490-022	Marina
VM29/463490-029	Pistachio
VM32/463490-032	Prospect
VM36/463490-036	Delight
VM39/463490-039	Nautical
VM40/463490-040	Pool
VM44/463490-044	Washed
VM45/463490-045	Sculpture
VM46/463490-046	Thatched
VM47/463490-047	Hike
VM48/463490-048	Tangle
VM49/463490-049	Pacific
VM50/463490-050	Cosmic
VM53/463490-053	Nasturtium

Messenger — Maharam

Ancillary/Seating/Workspaces
54” wide
78% post-industrial
recycled polyester
15% polyester
7% nylon

TI07/458640-007	Shadow
TI08/458640-008	Bayou *
TI24/458640-024	Poppy
TI25/458640-025	Mao
TI29/458640-029	Onyx *
TI31/458640-031	Cloud *
TI38/458640-038	Depth *
TI40/458640-040	Nile *
TI41/458640-041	Azure *
TI45/458640-045	Cactus *

Price category B continued on next page

GSA

Price Category B
continued

Messenger *continued*	
TI46/458640-046	Ice *
TI48/458640-048	Neon
TI50/458640-050	Hydrangea
TI53/458640-053	Tangelo
TI54/458640-054	Lumine *
TI58/458640-058	Snow **
TI60/458640-060	Peridot
TI61/458640-061	Capri *
TI62/458640-062	Ultramarine
TI63/458640-063	Squall
TI66/458640-066	Cassis
TI67/458640-067	Aster
TI69/458640-069	Cherry
TI70/458640-070	Vibrant
TI71/458640-071	Satsuma *
TI72/458640-072	Maize
TI76/458640-076	Fossil
TI77/458640-077	Ash
TI78/458640-078	Tusk
TI79/458640-079	Oyster **
TI81/458640-081	Husk
TI84/458640-084	Robust
TI85/458640-085	Beyond
TI86/458640-086	Voyage *
TI87/458640-087	Everglade
TI89/458640-089	Blanch **
TI90/458640-090	Longspur
TI91/458640-091	Vireo
TI92/458640-092	Dipper
TI93/458640-093	Gale
TI94/458640-094	Hunter
TI95/458640-095	Lime
TI96/458640-096	Apple
TI97/458640-097	Krill
TI98/458640-098	Catalyst

* Colors available on 20-day lead time.
** Colors not available on Eames Molded Fiberglass and Molded Plastic Side Chairs.

Price Category C

Manner - Maharam	
Ancillary/Seating/Workspaces	
54” wide	
65% post-industrial recycled polyester	
35% post-consumer recycled polyester	
Z2701/466177-001	Magic
Z2702/466177-002	Carob
Z2703/466177-003	Porpoise
Z2704/466177-004	Flint
Z2705/466177-005	Hush *
Z2706/466177-006	Nuance
Z2711/466177-011	Ember
Z2712/466177-012	Wagon
Z2713/466177-013	Ablaze
Z2714/466177-014	Peel
Z2716/466177-016	Butterscotch
Z2717/466177-017	Harvest
Z2720/466177-020	Parakeet
Z2722/466177-022	Aquatic
Z2723/466177-023	Cottage
Z2724/466177-024	Dahlia
Z2725/466177-025	Vivid
Z2726/466177-026	Basin
Z2727/466177-027	Schooner
Z2729/466177-029	Silverpoint
Z2730/466177-030	Lattice
Z2731/466177-031	Smoky
Z2732/466177-032	Magnetic
Z2733/466177-033	Woad
Z2734/466177-034	Resolute
Z2735/466177-035	Cruise
Z2736/466177-036	Atmospheric
Z2737/466177-037	Cloudburst
Z2738/466177-038	Tidewater
Z2739/466177-039	Firth
Z2740/466177-040	Oceanside
Z2741/466177-041	Grandeur
Z2742/466177-042	Comfort
Z2743/466177-043	Dill
Z2744/466177-044	Poplar
Z2745/466177-045	Citronella
Z2746/466177-046	Passerine

Manner *continued*	
Z2747/466177-047	Southwest
Z2748/466177-048	Roseate
Z2749/466177-049	Charisma
Z2750/466177-050	Siltstone
Z2751/466177-051	Kimono
Z2752/466177-052	Valiant
Z2753/466177-053	Baroness

* Color not available on Eames Aluminum Group, Executive Chairs, Upholstered Molded Plywood Chairs, and Sofa Compact.

Merit - Maharam	
Seating	
54” wide	
76% post-industrial recycled polyester	
24% polyester	
PFOA-Free stain resistant	
88Z01/466444-001	Trickle
88Z02/466444-002	Beluga
88Z03/466444-003	Gunmetal
88Z04/466444-004	Blackout
88Z05/466444-005	Superior
88Z06/466444-006	Ocean
88Z07/466444-007	Highborn
88Z08/466444-008	Immersed
88Z09/466444-009	Rainfall
88Z10/466444-010	Blizzard
88Z11/466444-011	Poolside
88Z12/466444-012	Steel
88Z13/466444-013	Zircon
88Z14/466444-014	Ripple
88Z15/466444-015	Aegean
88Z16/466444-016	Armada
88Z17/466444-017	Hedera
88Z18/466444-018	Rainforest
88Z19/466444-019	Gator
88Z20/466444-020	Vineyard
88Z21/466444-021	Pine
88Z22/466444-022	Kiwi
88Z23/466444-023	Kookaburra

Merit *continued*	
88Z24/466444-024	Bellini
88Z25/466444-025	Sunflower
88Z26/466444-026	Sandstorm
88Z27/466444-027	Mudder
88Z28/466444-028	Lynx
88Z29/466444-029	Farro
88Z30/466444-030	Manila
88Z31/466444-031	Starfish
88Z32/466444-032	Brass
88Z33/466444-033	Arrow
88Z34/466444-034	Gelato
88Z35/466444-035	Nectarine
88Z36/466444-036	Macaron
88Z37/466444-037	Alert
88Z38/466444-038	Goji
88Z39/466444-039	Cabernet
88Z40/466444-040	Eggplant
88Z41/466444-041	Hawk
88Z42/466444-042	Stag
88Z43/466444-043	Overcast

Metric – Maharam	
Seating/Workspaces	
54” wide	
51% post-industrial recycled polyester	
49% polyester	
Z302/466014-002	Fog
Z303/466014-003	Fleece
Z312/466014-012	Cardinal
Z313/466014-013	Lava
Z318/466014-018	Pollen
Z320/466014-020	Alligator
Z323/466014-023	Tar
Z324/466014-024	Anchor
Z326/466014-026	Admiral
Z327/466014-027	Seaport
Z328/466014-028	Scuba
Z329/466014-029	Skate
Z330/466014-030	Hopscotch
Z331/466014-031	Film
Z332/466014-032	Whale
Z333/466014-033	Downpour
Z334/466014-034	Midday

Price category C continued on next page

Price Category C
continued

Price Category D

Metric *continued*	
Z335/466014-035	Talisman
Z336/466014-036	Hedgerow
Z337/466014-037	Snorkel
Z338/466014-038	Highway
Z339/466014-039	Canary
Z340/466014-040	Sunny
Z341/466014-041	Aztec
Z342/466014-042	Fruit
Z343/466014-043	Galah
Z344/466014-044	Kiln
Z345/466014-045	Moth

Murmur - Maharam	
Seating	
55” wide	
100% polyester	
PFOA-Free stain resistant	
8EY01/466446-001	Gust
8EY02/466446-002	Harmonica
8EY03/466446-003	Canopy
8EY04/466446-004	Dim
8EY05/466446-005	Peppercorn
8EY06/466446-006	Cauldron
8EY07/466446-007	Conquer
8EY08/466446-008	Rapids
8EY09/466446-009	Seawater
8EY10/466446-010	Baby
8EY11/466446-011	Elderberry
8EY12/466446-012	Iceberg
8EY13/466446-013	Tallgrass
8EY14/466446-014	Underground
8EY15/466446-015	Biome
8EY16/466446-016	Cask
8EY17/466446-017	Argan
8EY18/466446-018	Sundown
8EY19/466446-019	Ignite
8EY20/466446-020	Sultry
8EY21/466446-021	Sangria

Bluff - Maharam	
Ancillary/Seating	
54” wide	
100% polyurethane	
Ink-resistant protective top coat	
Polyester backing	
8I801/466489-001	Loom
8I802/466489-002	Helm
8I803/466489-003	Cruller
8I804/466489-004	Folklore
8I805/466489-005	Beguile
8I806/466489-006	Sherpa
8I807/466489-007	Teleport
8I808/466489-008	Annex
8I809/466489-009	Lorimer
8I810/466489-010	Cinema
8I811/466489-011	Zip
8I812/466489-012	Coach
8I813/466489-013	Supernova
8I814/466489-014	Pirate
8I815/466489-015	Academy
8I816/466489-016	Disco
8I817/466489-017	Equator
8I818/466489-018	Brink
8I819/466489-019	Scene
8I820/466489-020	Petrichor
8I821/466489-021	Exotic
8I822/466489-022	Fauna
8I823/466489-023	Calabash
8I824/466489-024	Fuscous
8I825/466489-025	Wildling
8I826/466489-026	Blitz
8I827/466489-027	Allspice
8I828/466489-028	Lumos
8I829/466489-029	Pilot
8I830/466489-030	Jukebox
8I831/466489-031	Dugout
8I832/466489-032	Claret
8I833/466489-033	Flamenco

Mode – Maharam	
Ancillary/Seating/Workspaces	
54” wide	
80% post-consumer recycled polyester	
20% polyester	
PFOA-Free stain resistant finish	
ZMD01/466337-001	Stroll
ZMD02/466337-002	Intaglio
ZMD03/466337-003	Ominous
ZMD04/466337-004	Machine
ZMD05/466337-005	Talus
ZMD06/466337-006	Marsh
ZMD07/466337-007	Hollow
ZMD08/466337-008	Sycamore
ZMD09/466337-009	Clavicle
ZMD10/466337-010	Billygoat
ZMD11/466337-011	Spindle
ZMD12/466337-012	Lemon
ZMD13/466337-013	Oxeye
ZMD14/466337-014	Henge
ZMD15/466337-015	Goldenrod
ZMD16/466337-016	Cottontail
ZMD17/466337-017	Lioness
ZMD18/466337-018	Oriole
ZMD19/466337-019	Rust
ZMD20/466337-020	Carotene
ZMD21/466337-021	Blush
ZMD22/466337-022	Vermilion
ZMD23/466337-023	Alder
ZMD24/466337-024	Kermes
ZMD25/466337-025	Barberry
ZMD26/466337-026	Petal
ZMD27/466337-027	Valley
ZMD28/466337-028	Odyssey
ZMD29/466337-029	Ballpoint
ZMD30/466337-030	Toile
ZMD31/466337-031	Paradise

Mode *continued*	
ZMD32/466337-032	Angelfish
ZMD33/466337-033	Denim
ZMD34/466337-034	Crush
ZMD35/466337-035	Jetty
ZMD36/466337-036	Saltwater
ZMD37/466337-037	Mallard
ZMD38/466337-038	Celtic
ZMD39/466337-039	Eucalyptus
ZMD40/466337-040	Bonsai
ZMD41/466337-041	Sassafras
ZMD42/466337-042	Yucca
ZMD43/466337-043	Lichen

Spiral - Maharam	
Workspaces	
66” wide	
100% polyester	
ZS301/901882-001	Chalk
ZS303/901882-003	Wheat
ZS304/901882-004	Mica
ZS305/901882-005	Pavement
ZS306/901882-006	Graphite

GSA

Price Category E

Article – Maharam	
Ancillary/Seating	
54” wide	
100% vinyl	
ZAT08/458600-008	Marina
ZAT13/458600-013	Flume
ZAT14/458600-014	Storm
ZAT15/458600-015	Toast
ZAT19/458600-019	Fleece
ZAT22/458600-022	Stone
ZAT26/458600-026	Mercury
ZAT29/458600-029	Bluegrass
ZAT31/458600-031	Truffle
ZAT32/458600-032	Gravel
ZAT33/458600-033	Value
ZAT34/458600-034	Tint
ZAT35/458600-035	Snowflake
ZAT36/458600-036	Chalice
ZAT37/458600-037	Trail
ZAT38/458600-038	Pyramid
ZAT39/458600-039	Desert
ZAT40/458600-040	Lei
ZAT41/458600-041	Rouge
ZAT42/458600-042	Karma
ZAT43/458600-043	Opal
ZAT44/458600-044	Periwinkle
ZAT45/458600-045	Vampire
ZAT46/458600-046	Surf
ZAT47/458600-047	Plumage

Parallel — Maharam	
Workspaces	
66” wide	
100% recycled polyester	
TT03/901180-003	Fog
TT22/901180-022	Sterling
TT23/901180-023	Linen
TT24/901180-024	Pea
TT27/901180-027	Boulder
TT28/901180-028	Stream
TT29/901180-029	Shiitake
TT32/901180-032	Brandy
TT33/901180-033	Crater
TT36/901180-036	Quail

Price Category F

Apt – Maharam	
Ancillary/Seating	
54” wide	
100% polyurethane/silicone	
Ink-resistant protective top coat	
Polyester backing	
82T12/466392-012	Iris
82T13/466392-013	Nocturnal
82T14/466392-014	Fluid
82T15/466392-015	Eden
82T16/466392-016	Galactic
82T17/466392-017	Shoreline
82T18/466392-018	Jade
82T19/466392-019	Garden
82T20/466392-020	Botanic
82T21/466392-021	Chartreuse
82T23/466392-023	Lyric
82T24/466392-024	Turmeric
82T25/466392-025	Bengal
82T26/466392-026	Core
82T27/466392-027	Mantle
82T28/466392-028	Sorbet
82T32/466392-032	Oak
82T33/466392-033	Castle
82T34/466392-034	Follow
82T35/466392-035	Elixir
82T36/466392-036	Charm
82T37/466392-037	Descend
82T38/466392-009	Sketch
82T39/466392-010	Glacier
82T40/466392-031	Fortress
82T41/466392-030	Lotus
82T42/466392-001	Coconut
82T43/466392-011	Cobblestone
82T44/466392-029	Bloom
82T45/466392-022	Crepe
82T46/466392-006	Hickory
82T47/466392-007	Constellation
82T48/466392-008	Labyrinth
82T49/466392-002	Vibe
82T50/466392-003	Stampede
82T51/466392-004	Lumber
82T52/466392-005	Gingerbread

Emit – Maharam	
Workspaces	
54” wide	
55% post-industrial recycled polyester	
45% post-consumer recycled polyester	
PFOA-free stain resistant	
8EX01/466378-001	Wed
8EX02/466378-002	Zebra
8EX03/466378-003	Chiffon
8EX05/466378-005	Nectar
8EX06/466378-006	Elk
8EX08/466378-008	Goldenrod
8EX09/466378-009	Beached
8EX10/466378-010	Samba
8EX11/466378-011	Nest
8EX14/466378-014	Groove
8EX17/466378-017	Haiku
8EX18/466378-018	Bluefin
8EX19/466378-019	Flow
8EX20/466378-020	Xenon
8EX21/466378-021	Artem
8EX22/466378-022	Zen
8EX25/466378-025	Limeade

Instill – Maharam	
Ancillary/Seating	
54” wide	
100% polyurethane	
Ink-resistant protective top coat	
Polyester backing	
74M01/466351-001	Page
74M02/466351-002	Limestone
74M03/466351-003	Bobwhite
74M04/466351-004	Loafer
74M07/466351-007	Shaker
74M08/466351-008	Doe
74M09/466351-009	Ride
74M10/466351-010	Squire
74M11/466351-011	Tannin
74M12/466351-012	Vitis
74M14/466351-014	Quail
74M15/466351-015	Brittanic
74M16/466351-016	Narwhal
74M18/466351-018	Stowaway
74M19/466351-019	Koala
74M20/466351-020	Dorsal
74M21/466351-021	Stealth

Keen - Maharam	
Seating	
54” wide	
61% polyester	
39% polyolefin	
PFOA-Free stain resistant	
Acrylic backing	
89N01/466433-001	Gaur
89N02/466433-002	Lock
89N03/466433-003	Elk
89N04/466433-004	Oatmeal
89N05/466433-005	Lakefront
89N06/466433-006	Argent
89N07/466433-007	Coyote
89N08/466433-008	Eventide
89N09/466433-009	Canal
89N10/466433-010	Rosemary
89N11/466433-011	Herb
89N12/466433-012	Ruby
89N13/466433-013	Loganberry

Price category F continued on next page

Price Category F
continued

Price Category G

Ledger – Maharam

Ancillary/Seating
54” wide
100% polyurethane

V9G1/463770-001	001
V9G2/463770-002	002
V9G3/463770-003	003
V9G4/463770-004	004
V9GG/463770-017	017
V9GQ/463770-025	025
V9GS/463770-026	026
V9GU/463770-028	028
V9GV/463770-029	029
V9GW/463770-030	030
V9GX/463770-031	031
V9GY/463770-032	032
V9G18/463770-042	042
V9G19/463770-043	043
V9G20/463770-044	044
V9G21/463770-045	045
V9G22/463770-046	046

Loop - Maharam

Seating
57” wide
48% post-industrial recycled polyester
26% polyester
26% post-consumer recycled polyester
PFOA-Free stain resistant
Acrylic Backing

ZLL01/466469-001	Opossum
ZLL02/466469-002	Foundation
ZLL03/466469-003	Naval
ZLL04/466469-004	Buoyant
ZLL05/466469-005	Mockingbird
ZLL06/466469-006	Dynasty
ZLL07/466469-007	Zori
ZLL08/466469-008	Wildfire
ZLL09/466469-009	Floral
ZLL10/466469-010	Penguin

Pepper - Maharam

Seating
58” wide
49% polyester
41% post-industrial recycled polyester
10% post-consumer recycled polyester
PFOA-Free stain resistant
Acrylic Backing

8LW01/466486-001	Dojo
8LW02/466486-002	Marengo
8LW03/466486-003	Harlequin
8LW04/466486-004	Pavlova
8LW06/466486-006	Achiote
8LW07/466486-007	Essence
8LW08/466486-008	Genome
8LW09/466486-009	Myriad
8LW10/466486-010	Terrarium

Scuba - Maharam

Ancillary
54” wide
100% polyurethane

V9B1/464930-001	Vanilla
V9B5/464930-005	Chinchilla
V9B6/464930-006	Mahogany
V9B7/464930-007	Jet
V9B8/464930-008	Charcoal
V9B9/464930-009	Dolphin
V9BA/464930-010	Drizzle
V9BC/464930-012	Conifer
V9BD/464930-013	Bottle
V9BF/464930-015	Tourmaline
V9BG/464930-016	Sapphire
V9BH/464930-017	Electric
V9BL/464930-020	Cabernet
V9BM/464930-021	Brick
V9BN/464930-022	Coral
V9BP/464930-023	Autumn

Strum - Maharam

Seating
54” wide
100% polyurethane
with silver-based antimicrobial

Z3301/466122-001	Overcast
Z3302/466122-002	Ridge
Z3304/466122-004	Pigeon
Z3307/466122-007	Bur
Z3308/466122-008	Abalone
Z3312/466122-012	Lemongrass

Compound - Maharam

Seating
54” wide
100% polyurethane
silane-based antimicrobial

ZC201/466196-001	Quartz
ZC203/466196-003	Weathered
ZC204/466196-004	Cliff
ZC205/466196-005	Espresso
ZC206/466196-006	Smolder
ZC207/466196-007	Blaze
ZC208/466196-008	Mandarin
ZC209/466196-009	Maple
ZC210/466196-010	Perennial
ZC211/466196-011	Mountainside
ZC212/466196-012	Tundra
ZC213/466196-013	Manatee
ZC214/466196-014	Marine
ZC215/466196-015	Twilight
ZC216/466196-016	Shelter
ZC217/466196-017	Vessel
ZC218/466196-018	Smoke
ZC219/466196-019	Fog

Gild - Maharam

Ancillary/Seating
54” wide
100% non-phthalate vinyl
Ink-resistant protective top coat
Polyester backing

8AR01/466432-005	Grapevine
8AR02/466432-009	Frosting
8AR03/466432-007	Smokey
8AR04/466432-003	Skylight
8AR05/466432-011	Sandstone
8AR06/466432-004	Hurricane
8AR07/466432-002	Wreath
8AR08/466432-001	Rainforest
8AR09/466432-012	Fudge
8AR10/466432-010	Lantern
8AR11/466432-006	Planet
8AR12/466432-008	Reflection

GSA

Price Category H

Circles — Maharam	
Seating	
55” wide	
70% cotton	
30% polyester	
ZT01/458310-001	Khaki
ZT02/458310-002	Fatigue
ZT03/458310-003	Document
ZT04/458310-004	Engine

Dot Pattern — Maharam	
Seating	
55” wide	
71% cotton	
29% polyester	
ZK01/458300-001	Document
ZK02/458300-002	Taupe
ZK04/458300-004	Red
ZK05/458300-005	Navy

Small Dot Pattern — Maharam	
Seating	
55” wide	
71% cotton	
29% polyester	
ZL01/458320-001	Document
ZL02/458320-002	Sand
ZL03/458320-003	Khaki
ZL04/458320-004	Taupe
ZL05/458320-005	Charcoal
ZL06/458320-006	Document Reverse
ZL07/458320-007	Red
ZL08/458320-008	Yellow
ZL09/458320-009	Green

Price Category I

Cursive – Maharam	
Seating	
54” wide	
67% solution-dyed acrylic	
33% solution-dyed polyester	
PFOA-Free stain resistant	
7CW01/466335-001	Fast
7CW03/466335-003	Beachcomb
7CW05/466335-005	Swift
7CW06/466335-006	Jetstream
7CW07/466335-007	Inkwell
7CW08/466335-008	Rubber

Price Category J-Z

No fabrics available at this time.

Price Category 10M

Pace Leather – Maharam	
Ancillary	
approx. 50 sq. ft. per hide	
100% leather	
ZPA01/700011-001	Whisper
ZPA02/700011-002	Shy
ZPA03/700011-003	Granite
ZPA04/700011-004	Misty
ZPA05/700011-005	Studio
ZPA06/700011-006	Throne
ZPA07/700011-007	Proper
ZPA08/700011-008	Huron
ZPA09/700011-009	Darkroom
ZPA10/700011-010	Bark
ZPA11/700011-011	Raspberry
ZPA12/700011-012	Sangria
ZPA13/700011-013	Admiral
ZPA14/700011-014	Juniper
ZPA15/700011-015	Regal
ZPA16/700011-016	Vapor
ZPA17/700011-017	Valley
ZPA18/700011-018	Bushel
ZPA19/700011-019	Heirloom
ZPA20/700011-020	Palomino
ZPA21/700011-021	Bamboo
ZPA22/700011-022	Saffron
ZPA23/700011-023	Tearose
ZPA24/700011-024	Canyon
ZPA25/700011-025	Bistro
ZPA26/700011-026	Toffee
ZPA27/700011-027	Rodeo
ZPA28/700011-028	Mudslide
ZPA29/700011-029	Greige
ZPA30/700011-030	Reflection
ZPA31/700011-031	Pure
ZPA32/700011-032	Desert
ZPA33/700011-033	Griffin
ZPA34/700011-034	Urbane
ZPA35/700011-035	Woodrose

For more information about our products and services or to see a list of dealers, please visit us at HermanMiller.com or call (800) 851 1196.

© 2024 Herman Miller, Inc., Zeeland, Michigan

Distribution Rights

Working together since 1956, Herman Miller and Vitra are the authentic sources of designs by Charles and Ray Eames, Alexander Girard, and George Nelson. All the designs shown in this book are protected by law. Herman Miller has obtained all rights to make and sell these designs. Also, Herman Miller holds exclusive worldwide manufacturing and distribution rights for these products with the following exceptions:

Charles and Ray Eames, George Nelson, and Alexander Girard—Worldwide distribution rights for furniture in all areas except Europe and the Middle East. For those areas, please contact Vitra.

Isamu Noguchi—Worldwide distribution rights for the Noguchi Rudder Table. Distribution rights for the Noguchi Table in North America and Central America only. For all other areas, please contact Vitra.

Magis—Exclusive distribution rights in the US and Canada. For all other areas, please contact Magis.

® **HermanMiller**, ●, Action Office, Aeron, Aside, Canvas Office Landscape, Caper, Cosm, Co/Struc, Eames, Embody, Ethospace, Exclave, Fine-Tune, FlexFront, Formcoat, Ground Cloth, Intent, Layout Studio, Lino, Maharam, Meridian, Mirra, Motia, Nelson, Pellicle, Perspectives, Plex, PostureFit, PostureFit SL, Sayl, Setu, Tu, Verus, Y-Tower and Zeph are among the registered trademarks of Herman Miller, Inc., and its owned subsidiaries.

™ AireWeave, Bubbletack, Canvas Vista, Cellular Suspension, Commend, Compass, Connect, DOT, Durawrap, Everywhere, Flex-Edge, Headway, Hopsak 2, Iota, Keyless Entry, Latitude, Lyris 2, Mora, Multiscrim, Nevi, OE1, OE1 Workspace Collection, Overlay, Renew, Stackable, Swoop, Thrive, TriFlex, Twist and Valor are among the trademarks of Herman Miller, Inc., and its owned subsidiaries.

Chemsurf® is a registered trademark of Wilsonart International.

Corian® is a registered trademark of E.I. du Pont de Nemours and Company Corporation.

FLEXNET™ is a trademark of Milliken & Company.

Floor Saver Glide® is a registered trademark of Carpin Manufacturing, Inc.

Forest Stewardship Council® is a registered trademark of the Forest Stewardship Council A.C. (FSC). We are FSC® certified (FSC® C102895).

FSC® is a registered trademark of the Forest Stewardship Council A.C. (FSC).

MicrobeCare™ is a trademark of Parasol Medical LLC.

Microsoft® and Natural® Keyboard are registered trademarks of Microsoft Corporation.

Place Textiles® is a registered trademark of Place Textiles.