ELKAY®
SPECIFICATIONS

Lustertone® Classic Stainless Steel 31-1/2" x 21-1/8" x 7-1/2" Offset 70/30 Double Bowl Undermount Sink Kit
Model(s) ELUH3221RDBG

PRODUCT SPECIFICATIONS

Lustertone® Classic Stainless Steel 31-1/2" x 21-1/8" x 7-1/2" Offset 70/30 Double Bowl Undermount Sink Kit. Sink is manufactured from 18 gauge 304 Stainless Steel with a Lustrous Satin finish, Sides and Bottom pads.

Installation Type:	Sink Kits, Undermount
Material:	304 Stainless Steel
Finish:	Lustrous Satin
Gauge:	18
Sound Deadening:	Sides and Bottom pads
Number of Bowls:	2
Sink Dimensions:	31-1/2" x 21-1/8" x 7-1/2"
Bowl 1 Dimensions:	21" x 18-5/8" x 7-1/2"
Bowl 2 Dimensions:	7" x 14-1/8" x 5-9/16"
Drain Size:	3-1/2" (89mm)
Minimum Cabinet Size:	36"
Mounting Hardware:	Undermount brackets sold separately
Template Included:	Yes
Cutout Template #:	1000001391

Template is available for download at elkay.com. CAD software will be required to open the template.

Installation Profile:

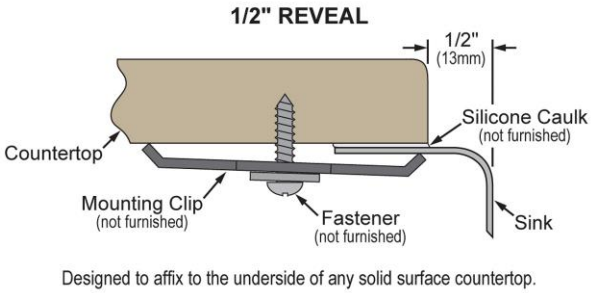

Designed to affix to the underside of any solid surface countertop.



Included with Product: **one LKWOBG2118SS bottom grid, one LK99 drain**

A Century of Tradition and Quality.
For more than 100 years, Elkay has been making innovative products and providing exceptional customer care. We take pride in offering plumbing products that make life easier, inspire change and leave the world a better place.

Product Compliance: ASME A112.19.3/CSA B45.4
Accessory: ASME A112.18.2/CSA B125.2

Clean and Care Manual (PDF)
Installation Instructions (PDF) - 1000005239
Installation Instructions (PDF) - 1000005235 drain
Warranty (PDF)

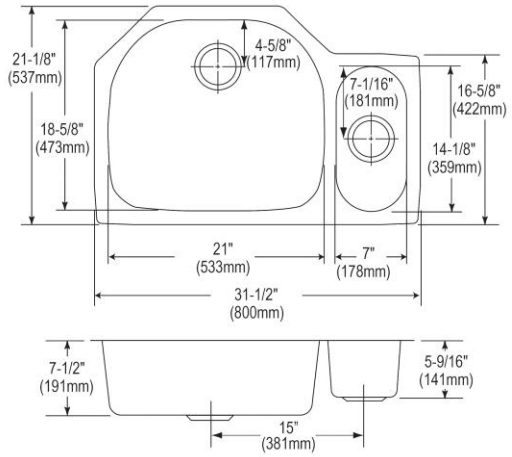

PART:_____QTY: _____
PROJECT:_____
CONTACT:_____
DATE:_____
NOTES:_____
APPROVAL:_____

In keeping with our policy of continuing product improvement, Elkay reserves the right to change product specifications without notice. Please visit elkay.com for the most current version of Elkay product specification sheets. This specification describes an Elkay product with design, quality, and functional benefits to the user. When making a comparison of other producers' offerings, be certain these features are not overlooked. Latest version of the spec sheet available: https://www.elkayfiles.com/spec-sheets/ELUH3221RDBG_spec.pdf

Lustertone® Classic Stainless Steel 31-1/2" x 21-1/8" x 7-1/2" Offset 70/30 Double Bowl Undermount Sink Kit

Model(s) ELUH3221RDBG

Included Accessories		
LK99	Deluxe 3-1/2" Drain Type 304 Stainless Steel Body Strainer Basket Rubber Seal and Tailpiece Spec Sheet (PDF)	
LKWOBG2118SS	Elkay Stainless Steel 18-3/4" x 16-5/8" x 1" Bottom Grid Spec Sheet (PDF)	

Optional Accessories		
CB2213	Hardwood 21-13/16" x 19-1/4" x 3/4" Cutting Board Spec Sheet (PDF)	

In keeping with our policy of continuing product improvement, Elkay reserves the right to change product specifications without notice. Please visit elkay.com for the most current version of Elkay product specification sheets. This specification describes an Elkay product with design, quality, and functional benefits to the user. When making a comparison of other producers' offerings, be certain these features are not overlooked. Latest version of the spec sheet available: https://www.elkayfiles.com/spec-sheets/ELUH3221RDBG_spec.pdf

© 2024