TEL: 800.BRADLEY
FAX: 262.251.5817
bradleycorp.com

Bradley Stainless Steel Partitions Service Parts List
Price Book 0322MSP

Effective Date March 15, 2022

Table of Contents

Layouts with Reference Numbers

	Series 400 (Floor-Mount with Overhead Brace) and 500 (Floor-Braced)	**2**
	Series 600 (Ceiling-Hung) and 700 (Floor-to-Ceiling)	**3**

Headrail Part Numbers and Kits

❶	Headrail	**4**
❷	Headrail Open-End Kit	**4**
❸	Headrail Between-the-Wall Kit	**4**

Shoes and Sleeves

❹	Shoe/Sleeve Kits	**5–6**

Inswing and Outswing Door Kits

❺	Inswing Door Kits	**7–17**
❻	Outswing Door Kits	**18-26**

Pilaster and Panel Kits

❼	Pilaster at Wall "F" Kits	**27-28**
	Pilaster at Pilaster/Panel "F" Kits	**27-28**
❽❾	Dividing/Ending Panel Kits and Ending Panel Kits	**29-30**

Additional Kits

	Alcove Kits	**31-32**
	Urinal Screen Bracket Kits	**32-33**
	Post Kits	**34-35**
	No-Site Kits	**35**
	Hinge and Latch Kits	**36-37**
	Door Pulls, Coat Hooks and Wall Bumpers	**37**
	Strike/Keeper Kits	**38**
	Continuous Stainless Steel Piano Hinge, Stainless Steel Cammed Hinge	**39**
	Telescoping Pilaster Kits	**40**
	Pilaster Channel Kits	**41**
	Panel Channel Kits	**41**
	Torx Bits	**42**
	Curtain Hook for Headrail	**42**
	Cam & Hinge Pin Kit	**42**
	Continuous "H" Bracket	**42**

Prices subject to change without notice.
Items may be changed or discontinued
without notice and without incurring obligation.

Series 400 and Series 500 Layouts

Series 400
Floor-Mounted,
Overhead Braced

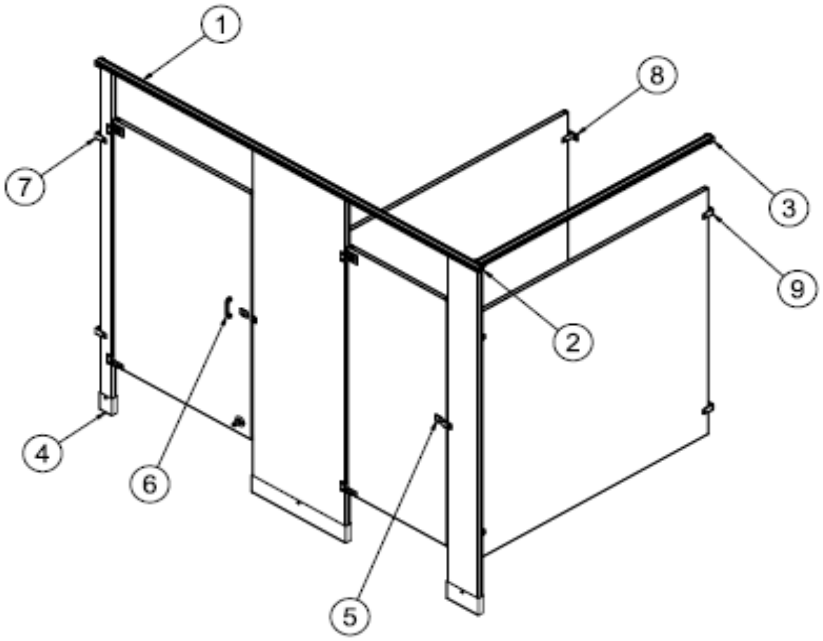

Series 500
Floor-Braced

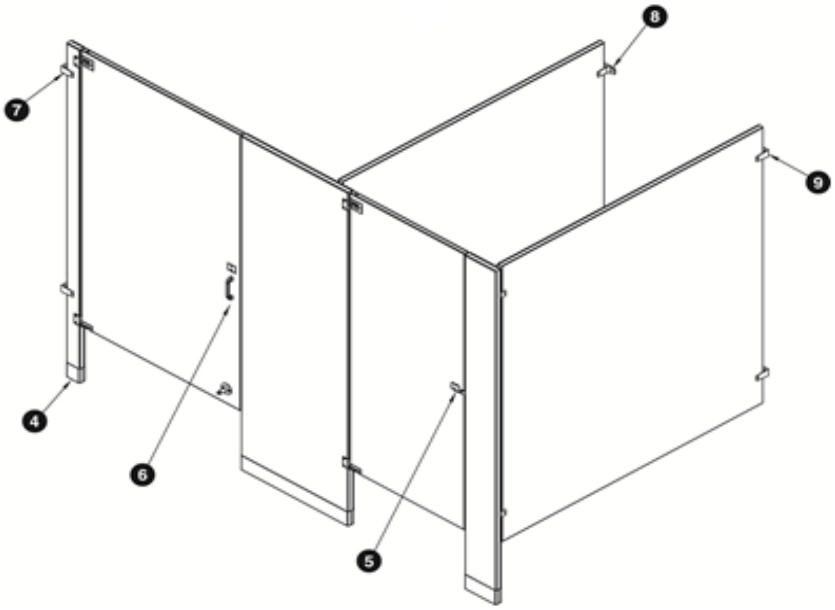

Series 600 and Series 700 Layouts

Series 600
Ceiling-Hung

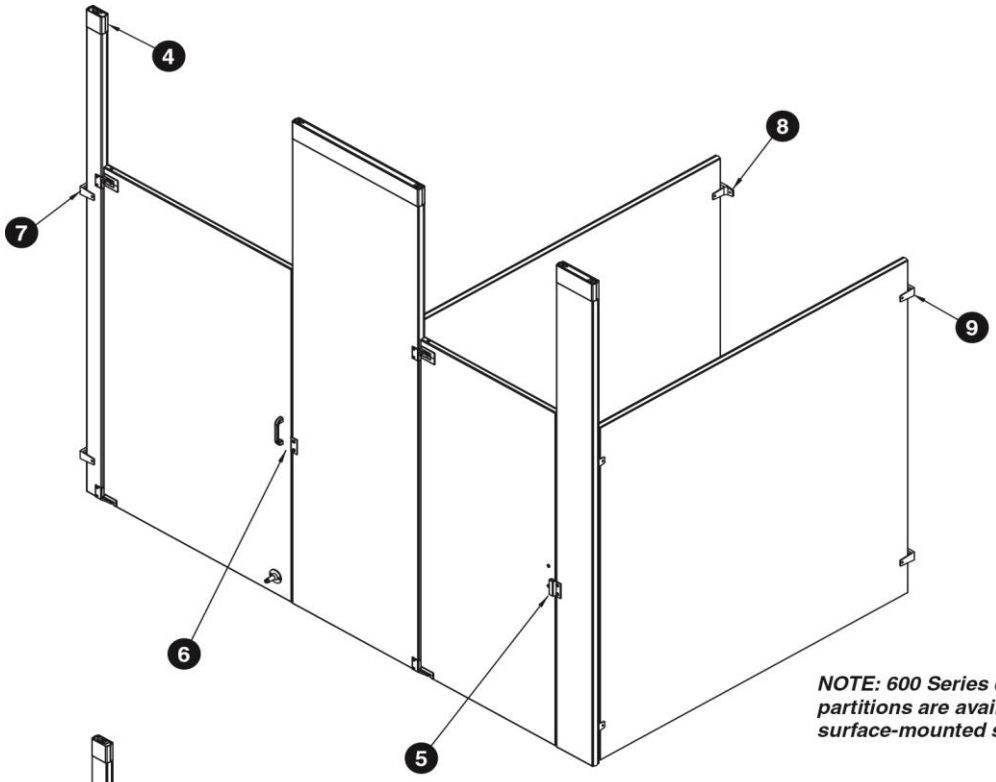

NOTE: 600 Series ceiling-hung partitions are available with surface-mounted slide latch only.

Series 700
Floor-to-Ceiling

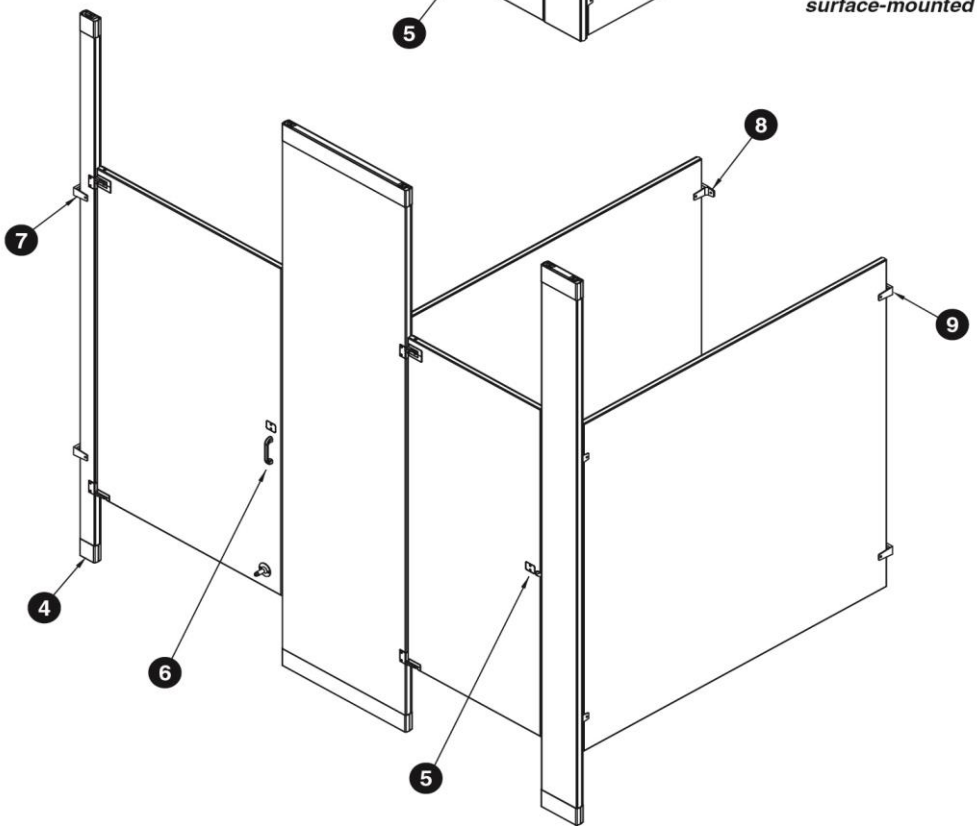

Effective Date March 15, 2022

Headrail and Headrail Kits

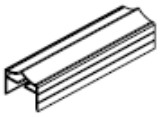

❶ Headrail only (mounting kits sold separately)	Part No.	Description	Qty.	List Price
	HDWT-A0458-037	Actual Size 37"	1	$ 23.00
	HDWT-A0458-059	Actual Size 59"	1	$ 32.00
	HDWT-A0458-062	Actual Size 62"	1	$ 36.00
	HDWT-A0458-073	Actual Size 73"	1	$ 45.00
	HDWT-A0458-084	Actual Size 84"	1	$ 51.00
	HDWT-A0458-096	Actual Size 96"	1	$ 67.00
	HDWT-A0458-120	Actual Size 120"	1	$ 77.00

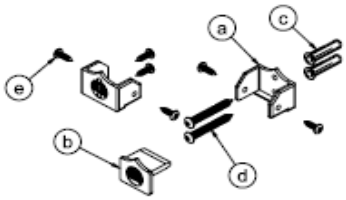

❷ Headrail Open End Kit	HDWT-A0461-OE			List Price
	Includes:			$ 27.00
		Part No.	Description	Qty.
	a	HDWT-P0459	Headrail Bracket 1-1/4"	3
	b	HDWT-P0460	Headrail End Cap 1-1/4"	1
	c	FAST-T373	Plastic Anchor #14-16 x 3/8"	4
	d	FAST-P002	Screw #14 x 2" BTN	4
	e	FAST-S351A	Screw #10 x 5/8" BTN	14

NOTE: Torx bits are not included but can be ordered separately.

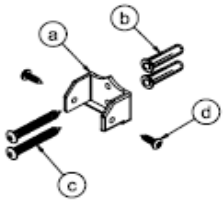

❸ Headrail Between-the-Wall Kit	HDWT-A0461-BW			List Price
	Includes:			$ 16.00
		Part No.	Description	Qty.
	a	HDWT-P0459	Headrail Bracket 1-1/4"	2
	b	FAST-T373	Plastic Anchor #14-16 x 3/8"	4
	c	FAST-P002	Screw #14 x 2" BTN	4
	d	FAST-S351A	Screw #10 x 5/8" BTN	12

NOTE: Torx bits are not included but can be ordered separately.

Shoe Kits

❹ Shoe Kit (for Series 400)

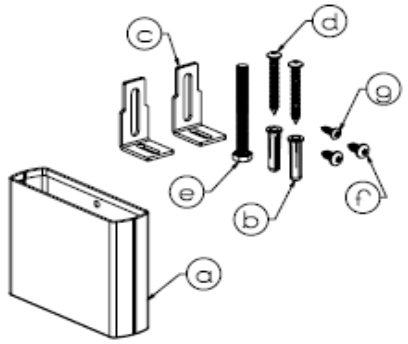

Part No.	Description	Qty.	List Price
HDWT-S0526-03	Actual Size 3"	1	$ 48.00
HDWT-S0526-04	Actual Size 4"	1	$ 49.00
HDWT-S0526-05	Actual Size 5"	1	$ 50.00
HDWT-S0526-06	Actual Size 6"	1	$ 50.00
HDWT-S0526-07	Actual Size 7"	1	$ 51.00
HDWT-S0526-08	Actual Size 8"	1	$ 51.00
HDWT-S0526-10	Actual Size 10"	1	$ 52.00
HDWT-S0526-12	Actual Size 12"	1	$ 53.00
HDWT-S0526-14	Actual Size 14"	1	$ 56.00
HDWT-S0526-18	Actual Size 18"	1	$ 64.00
HDWT-S0526-22	Actual Size 22"	1	$ 71.00
HDWT-S0526-24	Actual Size 24"	1	$ 71.00

Includes Hardware:

	Part No.	Description	Qty.
a	HDWT-S0524-XX	Pilaster Shoe (XX equals the shoe size)	1
b	FAST-T373	Plastic Anchor #14-16 X 1-3/8"	2
c	HDWT-S0525	Bracket-Leveling	2
d	FAST-P002	Screw 14X2 BTN SM TRX-T27 W/Pin 18-8 SS	2
e	FAST-S0039	Screw 5/16-18 X 3 Hex Cap SS	1
f	FAST-S355A	Screw 1/4-14X5/8 BTN T/S TRX-T27 W/Pin 410 SS NKLP	2
g	FAST-S351A	Screw #10X5/8 BTN T/S TRX-T27 W/Pin 410 SS NKLP	1

NOTE: Torx bits are not included but can be ordered separately.

❹ Shoe Kit (for Series 500)

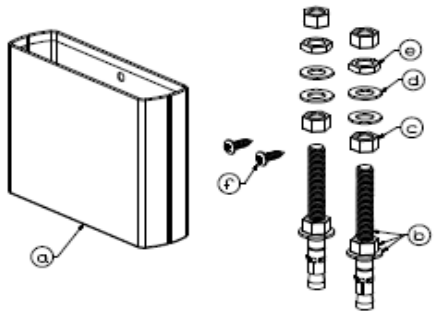

Part No.	Description	Qty.	List Price
HDWT-S0527-03	Actual Size 3"	1	$ 62.00
HDWT-S0527-04	Actual Size 4"	1	$ 63.00
HDWT-S0527-05	Actual Size 5"	1	$ 64.00
HDWT-S0527-06	Actual Size 6"	1	$ 64.00
HDWT-S0527-07	Actual Size 7"	1	$ 65.00
HDWT-S0527-08	Actual Size 8"	1	$ 65.00
HDWT-S0527-10	Actual Size 10"	1	$ 66.00
HDWT-S0527-12	Actual Size 12"	1	$ 67.00
HDWT-S0527-14	Actual Size 14"	1	$ 68.00
HDWT-S0527-18	Actual Size 18"	1	$ 76.00
HDWT-S0527-22	Actual Size 22"	1	$ 82.00
HDWT-S0527-24	Actual Size 24"	1	$ 82.00

Includes Hardware:

	Part No.	Description	Qty.
a	HDWT-S0524-XX	Pilaster Shoe (XX equals the shoe size)	1
b	FAST-S0040	Wedge Anchor 3/8-16 X 3-3/4 SS W/Nut & Washer	2
c	FAST-S0041	Nut 3/8 - 16 Hex 18-8 SS	4
d	FAST-S0042	Washer .406X.750X.050 Flat 18-8 SS	4
e	FAST-S0044	Spacer Nut 18-8 SS	2
f	FAST-S351A	Screw #10X5/8 BTN T/S TRX-T27 W/Pin 410 SS NKLP	2

NOTE: Torx bits are not included but can be ordered separately.

Shoe Kits

❹ Shoe	Part No.	Description	Qty.	List Price
	HDWT-S0528-03	Actual Size 3"	1	$ 6.00
	HDWT-S0528-04	Actual Size 4"	1	$ 10.00
	HDWT-S0528-05	Actual Size 5"	1	$ 12.00
	HDWT-S0528-06	Actual Size 6"	1	$ 15.00
	HDWT-S0528-07	Actual Size 7"	1	$ 15.00
	HDWT-S0528-08	Actual Size 8"	1	$ 17.00
	HDWT-S0528-10	Actual Size 10"	1	$ 23.00
	HDWT-S0528-12	Actual Size 12"	1	$ 27.00
	HDWT-S0528-14	Actual Size 14"	1	$ 30.00
	HDWT-S0528-18	Actual Size 18"	1	$ 40.00
	HDWT-S0528-22	Actual Size 22"	1	$ 51.00
	HDWT-S0528-24	Actual Size 24"	1	$ 52.00

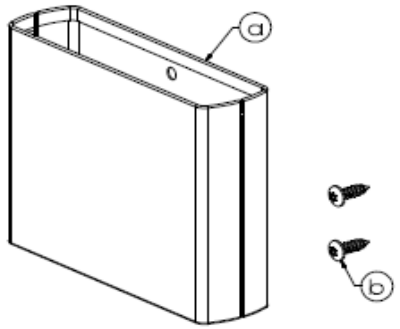

Includes Hardware:

	Part No.	Description	Qty.
a	HDWT-S0524-XX	Pilaster Shoe (XX equals the shoe size)	1
b	FAST-S351A	Screw #10X5/8 BTN T/S TRX-T27 W/Pin 410 SS NKLP	2

❹ Ceiling Stud (for Series 600 Sleeve Kit)	HDWT-Z0455-2			List Price
	Part No.	Description	Qty.	$ 25.00
a	FAST-S0042	Washer .406 x .750 x .050 FLAT 18-8 SS	6	
b	FAST-T5416	Threaded Rod 3/8 - 16 x 6 UNC-2A	2	
c	FAST-T680	Washer 1-1/4 SQ x 3/8 Bevel 3/8 Screw Cast Iron	2	
d	FAST-T377	Washer ⅜" Split-Lock Zamac P S	2	
e	FAST-T375	Nut 3/8 - 16 Hex Zamac P S	8	
f	FAST-S0044	Spacer Nut 18-8 SS	2	

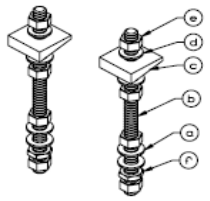

NOTE: Torx bits are not included but can be ordered separately.

❹ Shoe/Sleeve Kit (for Series 700)	Part No.	Description	Qty.	List Price
	HDWT-S0529-03	Actual Size 3"	1	$ 79.00
	HDWT-S0529-04	Actual Size 4"	1	$ 80.00
	HDWT-S0529-05	Actual Size 5"	1	$ 81.00
	HDWT-S0529-06	Actual Size 6"	1	$ 82.00
	HDWT-S0529-07	Actual Size 7"	1	$ 83.00
	HDWT-S0529-08	Actual Size 8"	1	$ 83.00
	HDWT-S0529-10	Actual Size 10"	1	$ 87.00
	HDWT-S0529-12	Actual Size 12"	1	$ 92.00
	HDWT-S0529-14	Actual Size 14"	1	$ 105.00
	HDWT-S0529-18	Actual Size 18"	1	$ 109.00
	HDWT-S0529-22	Actual Size 22"	1	$ 109.00
	HDWT-S0529-24	Actual Size 24"	1	$ 114.00

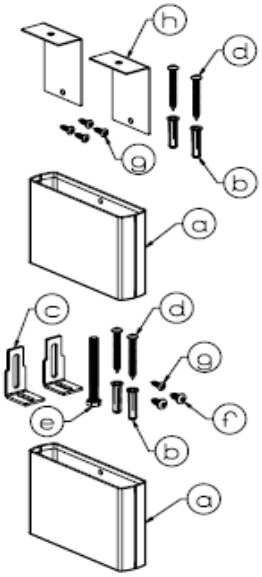

Includes Hardware:

	Part No.	Description	Qty.
a	HDWT-S0524-XX	Pilaster Shoe (XX equals the shoe size)	2
b	FAST-T373	Plastic Anchor #14-16 X 1-3/8"	4
c	HDWT-S0525	Bracket-Leveling	2
d	FAST-P002	Screw 14X2 BTN SM TRX-T27 W/Pin 18-8 SS	4
e	FAST-S0039	Screw 5/16-18 X 3 Hex Cap SS	1
f	FAST-S355A	Screw 1/4-14X5/8 BTN T/S TRX-T27 W/Pin 410 SS NKLP	2
g	FAST-S351A	Screw #10X5/8 BTN T/S TRX-T27 W/Pin 410 SS NKLP	5
h	HDWT-T0440	Bracket "L" FTC	2

NOTE: Torx bits are not included but can be ordered separately.

Inswing Door Kits

❺ Inswing Door Kit	HDWT-ZD1			List Price
	Includes:			$ 79.00
	Part No.	Description	Qty.	
a	HDWT-T101	Top Hinge w/Bushing	1	
b	HDWT-T103	Pin, Top Hinge	1	
c	HDWT-T112	Bottom Hinge	1	
d	HDWT-T113	Pin, Bottom Hinge	1	
e	HDWT-T211	Cam, Bottom Hinge	1	
f	HDWT-T118	⅜"-16 Lock Nut, Bottom Hinge	1	
g	HDWT-T290	Hardware Kit, Concealed Latch	1	
h	HDWT-Z0119	Wrap Around Strike Keeper	1	
i	HDWT-Z285	Coat Hook w/Bumper ZP	1	
j	FAST-Z003	Screw #10-24 x ¾" Barrel-Female Torx-T27 w/Pin ZP	5	
k	FAST-Z004A	Screw #10-24 x 1" Step-Male Torx-T27 w/Pin ZP	5	
l	FAST-Z0019	Screw #10 x ⅝" Sheet Metal Torx-T27 w/Pin ZP	2	
	Also available in Stainless Steel - HDWT-SD1			$ 94.00

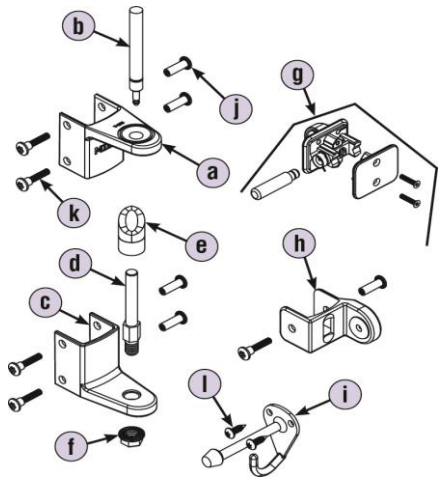

NOTE: Torx bits are not included but can be ordered separately.

❺ Inswing Door Kit with Flat Strike/Keeper	HDWT-ZD1-FS			List Price
	Includes:			$ 99.00
	Part No.	Description	Qty.	
a	HDWT-T101	Top Hinge w/Bushing	1	
b	HDWT-T103	Pin, Top Hinge	1	
c	HDWT-T112	Bottom Hinge	1	
d	HDWT-T113	Pin, Bottom Hinge	1	
e	HDWT-T211	Cam, Bottom Hinge	1	
f	HDWT-T118	⅜"-16 Lock Nut, Bottom Hinge	1	
g	HDWT-T290	Hardware Kit, Concealed Latch	1	
h	HDWT-Z0022	Flat Strike/Keeper Inswing & Outswing	1	
i	HDWT-Z285	Coat Hook with Bumper	1	
j	FAST-Z003	Screw #10-24 x ¾" Barrel-Female Torx-T27 w/Pin ZP	4	
k	FAST-Z004A	Screw #10-24 x 1" Step-Male Torx-T27 w/Pin ZP	4	
l	FAST-Z0006	Screw #10 x ¾" FL Sheet Metal Torx-T25 w/Pin ZP	2	
m	FAST-Z0019	Screw #10 x ⅝" Sheet Metal Torx-T27 w/Pin ZP	2	
	Also available in Stainless Steel - HDWT-SD1-FS			$ 147.00

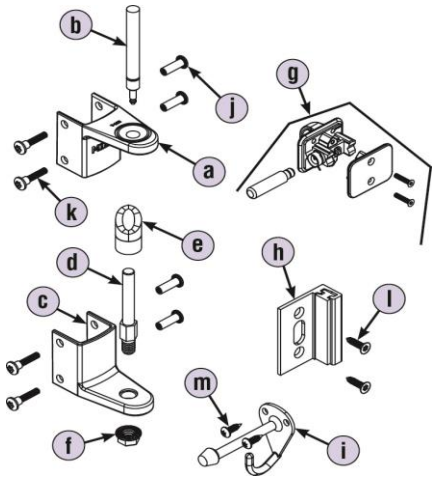

NOTE: Torx bits are not included but can be ordered separately.

Inswing Door Kits

❺ Inswing Door Kit with Flat Hinge	HDWT-ZD1-FH			List Price
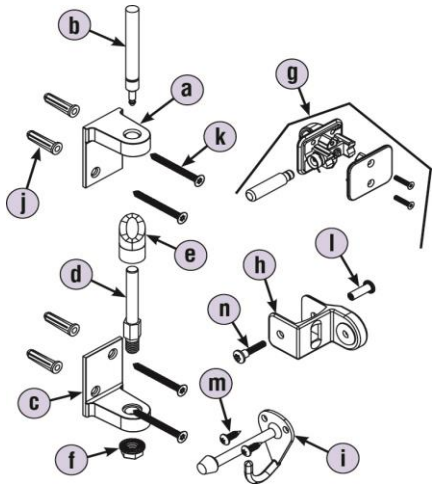	Includes:			$ 138.00
	Part No.	Description	Qty.	
	a	HDWT-S0149	Top Hinge Flat w/Bushing SS	1
	b	HDWT-T103	Pin, Top Hinge	1
	c	HDWT-S0150	Bottom Hinge Flat SS	1
	d	HDWT-T113	Pin, Bottom Hinge	1
	e	HDWT-T211	Cam, Bottom Hinge	1
	f	HDWT-T118	⅜"-16 Lock Nut, Bottom Hinge	1
	g	HDWT-T290	Hardware Kit, Concealed Latch	1
	h	HDWT-Z0119	Wrap Around Strike Keeper	1
	i	HDWT-Z285	Coat Hook with Bumper	1
	j	FAST-T381	Anchor - Plastic #10-12 x 1" Lg.	4
	k	FAST-S0023	Screw #10 x 2" FL Sheet Metal Torx-T25 w/Pin SS	4
	l	FAST-Z003	Screw #10-24 x ¾" Barrel-Female Torx-T27 w/Pin ZP	1
	m	FAST-Z0019	Screw #10 x ⅝" Sheet Metal Torx-T27 w/Pin ZP	2
	n	FAST-Z004A	Screw #10-24 x 1" Step-Male Torx-T27 w/Pin ZP	1
	Also available in Stainless Steel - HDWT-SD1-FH			$ 161.00

NOTE: Torx bits are not included but can be ordered separately.

❺ Inswing Door Kit with Flat Hinge & Strike/Keeper	HDWT-ZD1-FSH			List Price
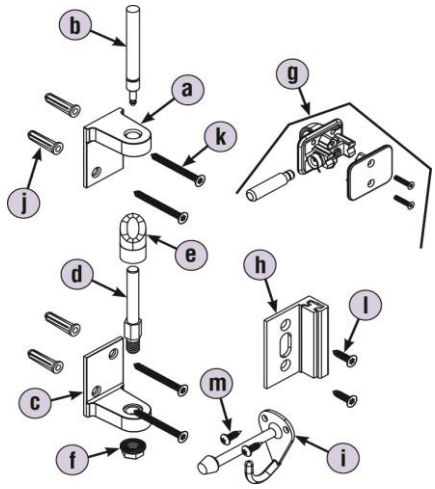	Includes:			$ 157.00
	Part No.	Description	Qty.	
	a	HDWT-S0149	Top Hinge Flat w/Bushing SS	1
	b	HDWT-T103	Pin, Top Hinge	1
	c	HDWT-S0150	Bottom Hinge Flat SS	1
	d	HDWT-T113	Pin, Bottom Hinge	1
	e	HDWT-T211	Cam, Bottom Hinge	1
	f	HDWT-T118	⅜"-16 Lock Nut, Bottom Hinge	1
	g	HDWT-T290	Hardware Kit, Concealed Latch	1
	h	HDWT-Z0022	Flat Strike/Keeper I/S & O/S	1
	i	HDWT-Z285	Coat Hook with Bumper	1
	j	FAST-T381	Anchor - Plastic #10-12 x 1" Lg.	4
	k	FAST-S0023	Screw #10 x 2" FL Sheet Metal Torx-T25 w/Pin SS	4
	l	FAST-Z0006	Screw #10 x ¾" FL Sheet Metal Torx-T25 w/Pin ZP	2
	m	FAST-Z0019	Screw #10 x ⅝" Sheet Metal Torx-T27 w/Pin ZP	2
	Also available in Stainless Steel - HDWT-SD1-FSH			$ 177.00

NOTE: Torx bits are not included but can be ordered separately.

Inswing Door Kits

❺ Inswing Door Kit with Surface Latch & W/A Strike/Keeper	HDWT-ZD1-SLWS			List Price
	Includes:			$ 84.00
	Part No.	Description	Qty.	
a	HDWT-T101	Top Hinge w/Bushing	1	
b	HDWT-T103	Pin, Top Hinge	1	
c	HDWT-T112	Bottom Hinge	1	
d	HDWT-T113	Pin, Bottom Hinge	1	
e	HDWT-T211	Cam, Bottom Hinge	1	
f	HDWT-T118	⅜"-16 Lock Nut, Bottom Hinge	1	
g	HDWT-Z0124	Latch, Slide Surface Mount ZP	1	
h	HDWT-Z0125	Strike/Keeper Inswing ZP	1	
i	HDWT-Z285	Coat Hook w/Bumper ZP	1	
j	FAST-Z003	Screw #10-24 x ¾" Barrel-Female Torx-T27 w/Pin ZP	8	
k	FAST-Z004A	Screw #10-24 x 1" Step-Male Torx-T27 w/Pin ZP	6	
l	FAST-Z004	Screw #10-24 x ¾" Step-Male Torx-T27 ZP	2	
m	FAST-Z0019	Screw #10 x ⅝" Sheet Metal Torx-T27 w/Pin ZP	2	
	Also available in Stainless Steel - HDWT-SD1-SLWS			$ 152.00

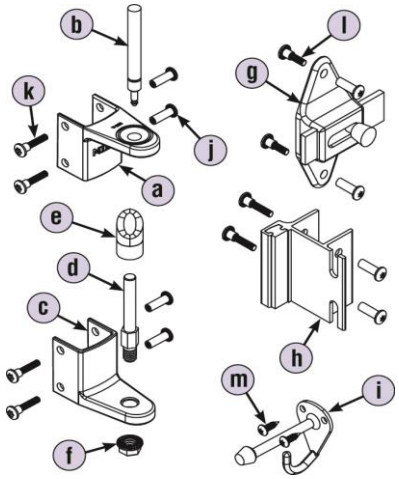

NOTE: Torx bits are not included but can be ordered separately.

❺ Inswing Door Kit with Surface Latch & Flat Strike/Keeper	HDWT-ZD1-SLFS			List Price
	Includes:			$ 73.00
	Part No.	Description	Qty.	
a	HDWT-T101	Top Hinge w/Bushing	1	
b	HDWT-T103	Pin, Top Hinge	1	
c	HDWT-T112	Bottom Hinge	1	
d	HDWT-T113	Pin, Bottom Hinge	1	
e	HDWT-T211	Cam, Bottom Hinge	1	
f	HDWT-T118	⅜"-16 Lock Nut, Bottom Hinge	1	
g	HDWT-Z0124	Latch, Slide Surface Mount ZP	1	
h	HDWT-Z0127	Flat Strike/Keeper Inswing ZP	1	
i	HDWT-Z285	Coat Hook with Bumper	1	
j	FAST-Z003	Screw #10-24 x ¾" Barrel-Female Torx-T27 w/Pin ZP	6	
k	FAST-Z004A	Screw #10-24 x 1" Step-Male Torx-T27 w/Pin ZP	4	
l	FAST-Z004	Screw #10-24 x ¾" Step-Male Torx-T27 ZP	2	
m	FAST-Z0019	Screw #10 x ⅝" Sheet Metal Torx-T27 w/Pin ZP	2	
n	FAST-Z0006	Screw #10 x ¾" FL Sheet Metal Torx-T25 w/Pin ZP	2	
	Also available in Stainless Steel - HDWT-SD1-SLFS			$ 150.00

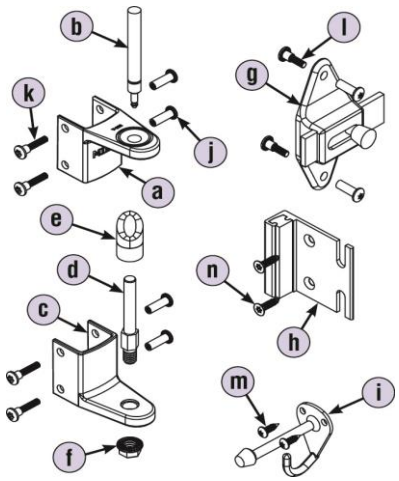

NOTE: Torx bits are not included but can be ordered separately.

Inswing Door Kits

❺ Inswing ADA Door Kit with Surface Latch W/A Strike/Keeper & Door Pull

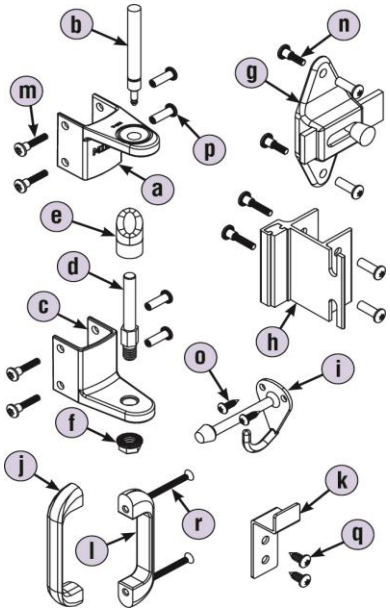

HDWT-ZD1-SLWSHC				List Price
Includes:				$ 96.00
	Part No.	Description	Qty.	
a	HDWT-T101	Top Hinge w/Bushing	1	
b	HDWT-T103	Pin, Top Hinge	1	
c	HDWT-T112	Bottom Hinge	1	
d	HDWT-T113	Pin, Bottom Hinge	1	
e	HDWT-T211	Cam, Bottom Hinge	1	
f	HDWT-T118	⅜"-16 Lock Nut, Bottom Hinge	1	
g	HDWT-Z0124	Latch, Slide Surface Mount ZP	1	
h	HDWT-Z0125	Strike/Keeper Inswing ZP	1	
i	HDWT-Z285	Coat Hook w/Bumper ZP	1	
j	HDWT-Z282	Door Pull ZP	1	
k	HDWT-S275	Coat Hook Outswing Stainless Steel	1	
l	HDW0-Z0167	Door Pull with Countersink	1	
m	FAST-Z004A	Screw #10-24 x 1" Step-Male Torx-T27 w/Pin ZP	6	
n	FAST-Z004	Screw #10-24 x ¾" Step-Male Torx-T27 ZP	2	
o	FAST-Z0019	Screw #10 x ⅝" Sheet Metal Torx-T27 w/Pin ZP	2	
p	FAST-Z003	Screw #10-24 x ¾" Barrel-Female Torx-T27 w/Pin ZP	8	
q	FAST-Z0016	Screw #14 x ⅝" Sheet Metal Torx-T27 w/Pin ZP	2	
r	FAST-Z0027	Screw #10-24 x 2" Flat Machine Torx ZP	2	
Also available in Stainless Steel - HDWT-SD1-SLWSHC				$ 202.00

NOTE: Torx bits are not included but can be ordered separately.

❺ Inswing ADA Door Kit with Surface Latch, Flat Strike/Keeper & Door Pull

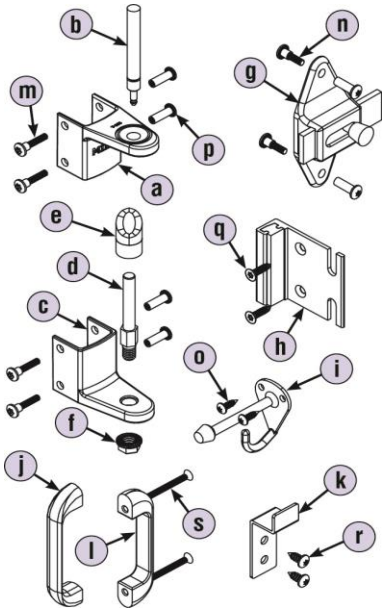

HDWT-ZD1-SLFSHC				List Price
Includes:				$ 81.00
	Part No.	Description	Qty.	
a	HDWT-T101	Top Hinge w/Bushing	1	
b	HDWT-T103	Pin, Top Hinge	1	
c	HDWT-T112	Bottom Hinge	1	
d	HDWT-T113	Pin, Bottom Hinge	1	
e	HDWT-T211	Cam, Bottom Hinge	1	
f	HDWT-T118	⅜"-16 Lock Nut, Bottom Hinge	1	
g	HDWT-Z0124	Latch, Slide Surface Mount ZP	1	
h	HDWT-Z0127	Flat Strike/Keeper Inswing ZP	1	
i	HDWT-Z285	Coat Hook with Bumper	1	
j	HDWT-Z282	Door Pull ZP	1	
k	HDWT-S275	Coat Hook Outswing Stainless Steel	1	
l	HDW0-Z0167	Door Pull with Countersink	1	
m	FAST-Z004A	Screw #10-24 x 1" Step-Male Torx-T27 w/Pin ZP	4	
n	FAST-Z004	Screw #10-24 x ¾" Step-Male Torx-T27 ZP	2	
o	FAST-Z0019	Screw #10 x ⅝" Sheet Metal Torx-T27 w/Pin ZP	2	
p	FAST-Z003	Screw #10-24 x ¾" Barrel-Female Torx-T27 w/Pin ZP	6	
q	FAST-Z0006	Screw #10 x ¾" FL Sheet Metal Torx-T25 w/Pin ZP	2	
r	FAST-Z0016	Screw #14 x ⅝" Sheet Metal Torx-T27 w/Pin ZP	2	
s	FAST-Z0027	Screw #10-24 x 2" Flat Machine Torx ZP	2	
Also available in Stainless Steel - HDWT-SD1-SLFSHC				$ 200.00

NOTE: Torx bits are not included but can be ordered separately.

Inswing Door Kits

❺ Inswing Door Kit with Piano Hinge (RHI/LHO)	HDWT-Z0234			List Price
	Includes:			$ 225.00
	Part No.	Description	Qty.	
	a	HDWT-T290	Hardware Kit, Concealed Latch	1
	b	HDWT-Z0119	Wrap Around Strike Keeper	1
	c	HDWT-Z285	Coat Hook w/Bumper ZP	1
	d	FAST-Z003	Screw #10-24 x ¾" Barrel-Female Torx-T27 w/Pin ZP	1
	e	FAST-Z004A	Screw #10-24 x 1" Step-Male Torx-T27 w/Pin ZP	1
	f	FAST-Z0019	Screw #10 x ⅝" Sheet Metal Torx-T27 w/Pin ZP	2
	g	HDWT-S0208	Piano Hinge, Continuous Stainless Steel (RHI-LHO)	1
	h	FAST-P003	Screw #10-24 x ¾" BTN Barrel-Female Torx-T27 w/Pin SS	14
	i	FAST-P004	Screw #10-24 x ¾" BTN Step-Male Torx-T27 SS	7
	j	FAST-P004A	Screw #10-24 x 1" Shoulder Torx-T27 SS	7
	Also available in Stainless Steel - HDWT-S0234			$ 254.00
	Also available in Stainless Steel 72"H - HDWT-S0234-72			$ 420.00

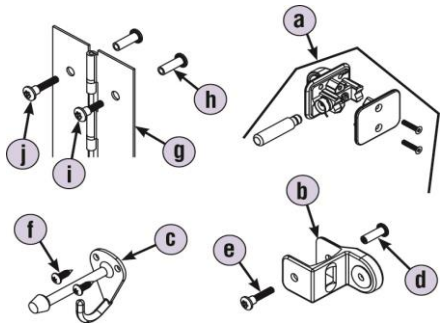

NOTE: Torx bits are not included but can be ordered separately.

❺ Inswing Door Kit with Piano Hinge (LHI/RHO)	HDWT-Z0236			List Price
	Includes:			$ 225.00
	Part No.	Description	Qty.	
	a	HDWT-T290	Hardware Kit, Concealed Latch	1
	b	HDWT-Z0119	Wrap Around Strike Keeper	1
	c	HDWT-Z285	Coat Hook w/Bumper ZP	1
	d	FAST-Z003	Screw #10-24 x ¾" Barrel-Female Torx-T27 w/Pin ZP	1
	e	FAST-Z004A	Screw #10-24 x 1" Step-Male Torx-T27 w/Pin ZP	1
	f	FAST-Z0019	Screw #10 x ⅝" Sheet Metal Torx-T27 w/Pin ZP	2
	g	HDWT-S0209	Piano Hinge, Continuous Stainless Steel (LHI-RHO)	1
	h	FAST-P003	Screw #10-24 x ¾" BTN Barrel-Female Torx-T27 w/Pin SS	14
	i	FAST-P004	Screw #10-24 x ¾" BTN Step-Male Torx-T27 SS	7
	j	FAST-P004A	Screw #10-24 x 1" Shoulder Torx-T27 SS	7
	Also available in Stainless Steel - HDWT-S0236			$ 254.00
	Also available in Stainless Steel 72"H - HDWT-S0236-72			$ 420.00

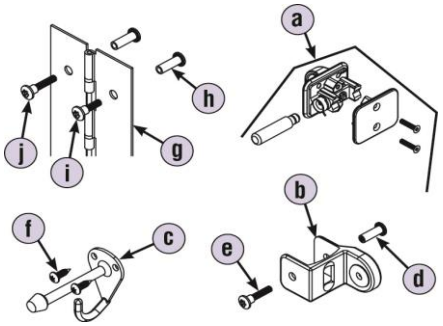

NOTE: Torx bits are not included but can be ordered separately.

Inswing Door Kits

❺ Inswing Flat Strike Door Kit with Piano Hinge (RHI/LHO)	HDWT-Z0238			List Price
	Includes:			$ 225.00
	Part No.	Description	Qty.	
	a HDWT-T290	Hardware Kit, Concealed Latch	1	
	b HDWT-Z0022	Flat Strike Keeper	1	
	c HDWT-Z285	Coat Hook w/Bumper ZP	1	
	d FAST-Z0006	Screw #10 x ¾" FL Sheet Metal Torx-T25 w/Pin ZP	2	
	e FAST-Z0019	Screw #10 x ⅝" Sheet Metal Torx-T27 w/Pin ZP	2	
	f HDWT-S0208	Piano Hinge, Continuous Stainless Steel (RHI-LHO)	1	
	g FAST-P003	Screw #10-24 x ¾" BTN Barrel-Female Torx-T27 w/Pin SS	14	
	h FAST-P004	Screw #10-24 x ¾" BTN Step-Male Torx-T27 SS	7	
	i FAST-P004A	Screw #10-24 x 1" Shoulder Torx-T27 SS	7	
	Also available in Stainless Steel - HDWT-S0238			$ 254.00
	Also available in Stainless Steel 72"H - HDWT-S0238-72			$ 420.00

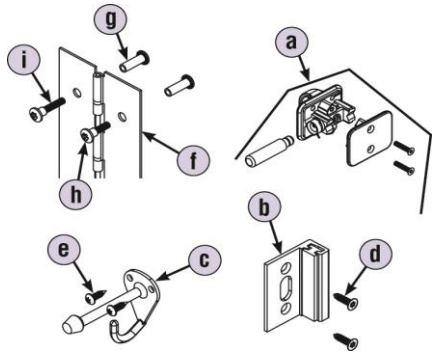

NOTE: Torx bits are not included but can be ordered separately.

❺ Inswing Flat Strike Door Kit with Piano Hinge (LHI/RHO)	HDWT-Z0240			List Price
	Includes:			$ 225.00
	Part No.	Description	Qty.	
	a HDWT-T290	Hardware Kit, Concealed Latch	1	
	b HDWT-Z0022	Flat Strike Keeper	1	
	c HDWT-Z285	Coat Hook w/Bumper ZP	1	
	d FAST-Z0006	Screw #10 x ¾" FL Sheet Metal Torx-T25 w/Pin ZP	2	
	e FAST-Z0019	Screw #10 x ⅝" Sheet Metal Torx-T27 w/Pin ZP	2	
	f HDWT-S0209	Piano Hinge, Continuous Stainless Steel (LHI-RHO)	1	
	g FAST-P003	Screw #10-24 x ¾" BTN Barrel-Female Torx-T27 w/Pin SS	14	
	h FAST-P004	Screw #10-24 x ¾" BTN Step-Male Torx-T27 SS	7	
	i FAST-P004A	Screw #10-24 x 1" Shoulder Torx-T27 SS	7	
	Also available in Stainless Steel - HDWT-S0240			$ 254.00
	Also available in Stainless Steel 72"H - HDWT-S0240-72			$ 420.00

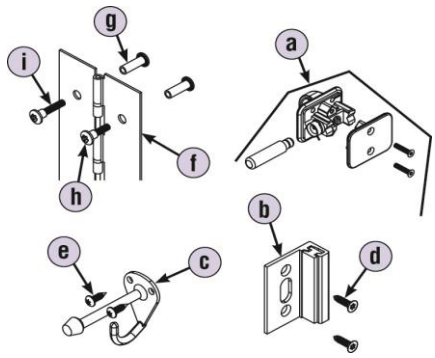

NOTE: Torx bits are not included but can be ordered separately.

Inswing Door Kits

❺	Inswing ADA Piano Hinge (58" Door)	HDWT-S0242 (RHI/LHO)			List Price
		Includes:			$ 280.00
			Part No.	Description	Qty.
		a	HDWT-S0124	Slide Latch	1
		b	HDWT-S0125	Strike/Keeper Inswing	1
		c	HDWT-S177	Wall Bumper	1
		d	HDWT-S282	Door Pull	1
		e	HDWT-S275	Coat Hook Outswing	1
		f	FAST-P003	Screw #10-24 x 3/4" BTN Barrel-Female Torx-T27 w/Pin SS	18
		g	FAST-P004A	Screw #10-24 x 1" Shoulder Torx-T27 SS	9
		h	FAST-P004	Screw #10-24 x 3/4" BTN Step-Male Torx-T27	9
		i	FAST-S351A	Screw #10 x 5/8" BTN Torx-T27 w/Pin SS	2
		j	FAST-S0027	Screw #10-24 x 2" Flat Machine Torx SS	2
		k	FAST-S355A	Screw 1/4-14 X 5/8" Sheet Metal Torx-T27 w/Pin SS	2
		l	HDW0-S0167	Door Pull w/Counter	1
		m	HDWT-S0208	Piano Hinge, Continuous Stainless Steel 57-1/2" RHI/LHO	1
		Also available in 69"H - HDWT-S0242-69			$ 478.00

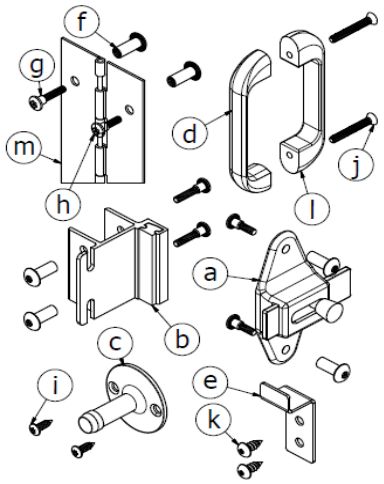

NOTE: Torx bits are not included but can be ordered separately.

❺	Inswing ADA Piano Hinge (58" Door)	HDWT-S0243 (LHI/RHO)			List Price
		Includes:			$ 280.00
			Part No.	Description	Qty.
		a	HDWT-S0124	Slide Latch	1
		b	HDWT-S0125	Strike/Keeper Inswing	1
		c	HDWT-S177	Wall Bumper	1
		d	HDWT-S282	Door Pull	1
		e	HDWT-S275	Coat Hook Outswing	1
		f	FAST-P003	Screw #10-24 x 3/4" BTN Barrel-Female Torx-T27 w/Pin SS	18
		g	FAST-P004A	Screw #10-24 x 1" Shoulder Torx-T27 SS	9
		h	FAST-P004	Screw #10-24 x 3/4" BTN Step-Male Torx-T27	9
		i	FAST-S351A	Screw #10 x 5/8" BTN Torx-T27 w/Pin SS	2
		j	FAST-S0027	Screw #10-24 x 2" Flat Machine Torx SS	2
		k	FAST-S355A	Screw 1/4-14 X 5/8" Sheet Metal Torx-T27 w/Pin SS	2
		l	HDW0-S0167	Door Pull w/Counter	1
		m	HDWT-S0209	Piano Hinge, Continuous Stainless Steel 57-1/2" LHI/RHO	1
		Also available in 69"H - HDWT-S0243-69			$ 478.00

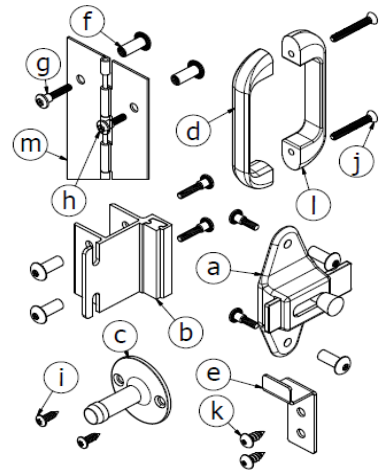

NOTE: Torx bits are not included but can be ordered separately.

Inswing Door Kits

❺	Inswing ADA Flat Strike SS Piano Hinge (58" Door)	HDWT-S0244 (RHI/LHO)			List Price
		Includes:			$ 267.00
			Part No.	Description	Qty.
		a	HDWT-S0124	Slide Latch	1
		b	HDWT-S0127	Flat Strike/Keeper Inswing	1
		c	HDWT-S177	Wall Bumper	1
		d	HDWT-S282	Door Pull	1
		e	HDWT-S275	Coat Hook Outswing	1
		f	FAST-P003	Screw #10-24 x 3/4" BTN Barrel-Female Torx-T27 w/Pin SS	16
		g	FAST-S0006	Screw #10 x 3/4" FL Sheet Metal Torx-T25	2
		h	FAST-P004A	Screw #10-24 x 1" Shoulder Torx-T27 SS	7
		i	FAST-P004	Screw #10-24 x 3/4" BTN Step-Male Torx-T27	9
		j	FAST-S351A	Screw #10 x 5/8" BTN Torx-T27 w/Pin SS	2
		k	FAST-S0027	Screw #10-24 x 2" Flat Machine Torx SS	2
		l	FAST-S355A	Screw 1/4-14 X 5/8" Sheet Metal Torx-T27 w/Pin SS	2
		m	HDW0-S0167	Door Pull w/Counter	1
		n	HDWT-S0208	Piano Hinge, Continuous Stainless Steel 57-1/2" RHI/LHO	1
		Also available in 69"H - HDWT-S0244-69			$ 456.00

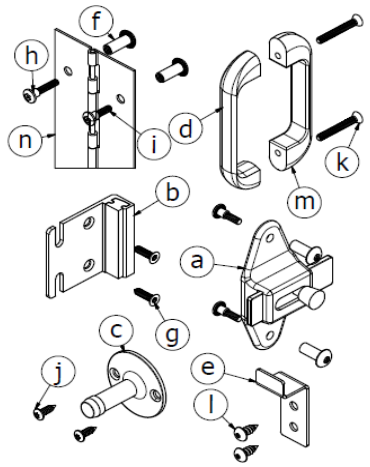

NOTE: Torx bits are not included but can be ordered separately.

❺	Inswing ADA Flat Strike SS Piano Hinge (58" Door)	HDWT-S0245 (LHI/RHO)			List Price
		Includes:			$ 267.00
			Part No.	Description	Qty.
		a	HDWT-S0124	Slide Latch	1
		b	HDWT-S0127	Flat Strike/Keeper Inswing	1
		c	HDWT-S177	Wall Bumper	1
		d	HDWT-S282	Door Pull	1
		e	HDWT-S275	Coat Hook Outswing	1
		f	FAST-P003	Screw #10-24 x 3/4" BTN Barrel-Female Torx-T27 w/Pin SS	16
		g	FAST-S0006	Screw #10 x 3/4" FL Sheet Metal Torx-T25	2
		h	FAST-P004A	Screw #10-24 x 1" Shoulder Torx-T27 SS	7
		i	FAST-P004	Screw #10-24 x 3/4" BTN Step-Male Torx-T27	9
		j	FAST-S351A	Screw #10 x 5/8" BTN Torx-T27 w/Pin SS	2
		k	FAST-S0027	Screw #10-24 x 2" Flat Machine Torx SS	2
		l	FAST-S355A	Screw 1/4-14 X 5/8" Sheet Metal Torx-T27 w/Pin SS	2
		m	HDW0-S0167	Door Pull w/Counter	1
		n	HDWT-S0209	Piano Hinge, Continuous Stainless Steel 57-1/2" LHI/RHO	1
		Also available in 69"H - HDWT-S0245-69			$ 456.00

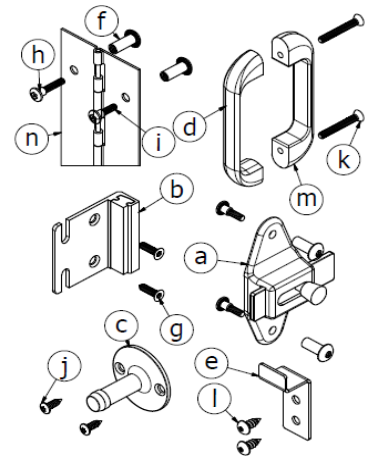

NOTE: Torx bits are not included but can be ordered separately.

Inswing Door Kits

5 Inswing Surface Latch SS Piano Hinge (58" Door)

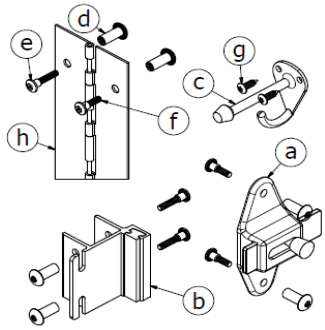

HDWT-S0246 (RHI/LHO) — **List Price** $ 232.00

Includes:

	Part No.	Description	Qty.
a	HDWT-S0124	Slide Latch	1
b	HDWT-S0125	Strike/Keeper Inswing	1
c	HDWT-S285	Coat Hook w/Bumper	1
d	FAST-P003	Screw #10-24 x 3/4" BTN Barrel-Female Torx-T27 w/Pin SS	18
e	FAST-P004A	Screw #10-24 x 1" Shoulder Torx-T27 SS	9
f	FAST-P004	Screw #10-24 x 3/4" BTN Step-Male Torx-T27	9
g	FAST-S351A	Screw #10 x 5/8" BTN Torx-T27 w/Pin SS	2
h	HDWT-S0208	Piano Hinge, Continuous SS 57-1/2" (RHI/LHO)	1

Also available in 72"H - HDWT-S0246-72 — $ 370.00

NOTE: Torx bits are not included but can be ordered separately.

5 Inswing Surface Latch SS Piano Hinge (58" Door)

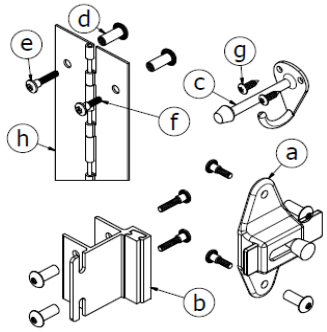

HDWT-S0248 (LHI/RHO) — **List Price** $ 232.00

Includes:

	Part No.	Description	Qty.
a	HDWT-S0124	Slide Latch	1
b	HDWT-S0125	Strike/Keeper Inswing	1
c	HDWT-S285	Coat Hook w/Bumper	1
d	FAST-P003	Screw #10-24 x 3/4" BTN Barrel-Female Torx-T27 w/Pin SS	18
e	FAST-P004A	Screw #10-24 x 1" Shoulder Torx-T27 SS	9
f	FAST-P004	Screw #10-24 x 3/4" BTN Step-Male Torx-T27	9
g	FAST-S351A	Screw #10 x 5/8" BTN Torx-T27 w/Pin SS	2
h	HDWT-S0209	Piano Hinge, Continuous SS 57-1/2" (RHI/LHO)	1

Also available in 72"H - HDWT-S0248-72 — $ 370.00

NOTE: Torx bits are not included but can be ordered separately.

5 Inswing Surface Flat Strike SS Piano Hinge (58" Door)

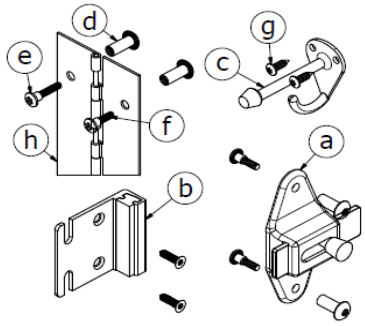

HDWT-S0250 (RHI/LHO) — **List Price** $ 232.00

Includes:

	Part No.	Description	Qty.
a	HDWT-S0124	Slide Latch	1
b	HDWT-S0127	Flat Strike/Keeper Inswing	1
c	HDWT-S285	Coat Hook w/Bumper	1
d	FAST-P003	Screw #10-24 x 3/4" BTN Barrel-Female Torx-T27 w/Pin SS	16
e	FAST-P004A	Screw #10-24 x 1" Shoulder Torx-T27 SS	7
f	FAST-P004	Screw #10-24 x 3/4" BTN Step-Male Torx-T27	9
g	FAST-S351A	Screw #10 x 5/8" BTN Torx-T27 w/Pin SS	2
h	HDWT-S0208	Piano Hinge, Continuous SS 57-1/2" (RHI/LHO)	1

Also available in 72"H - HDWT-S0250-72 — $ 370.00

NOTE: Torx bits are not included but can be ordered separately.

5 Inswing Surface Flat Strike SS Piano Hinge (58" Door)

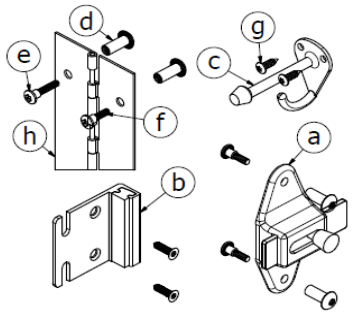

HDWT-S0252 (LHI/RHO) — **List Price** $ 232.00

Includes:

	Part No.	Description	Qty.
a	HDWT-S0124	Slide Latch	1
b	HDWT-S0127	Flat Strike/Keeper Inswing	1
c	HDWT-S285	Coat Hook w/Bumper	1
d	FAST-P003	Screw #10-24 x 3/4" BTN Barrel-Female Torx-T27 w/Pin SS	16
e	FAST-P004A	Screw #10-24 x 1" Shoulder Torx-T27 SS	7
f	FAST-P004	Screw #10-24 x 3/4" BTN Step-Male Torx-T27	9
g	FAST-S351A	Screw #10 x 5/8" BTN Torx-T27 w/Pin SS	2
h	HDWT-S0208	Piano Hinge, Continuous SS 57-1/2" (LHI/RHO)	1

Also available in 72"H - HDWT-S0252-72 — $ 370.00

NOTE: Torx bits are not included but can be ordered separately.

Inswing Door Kits

❺ Inswing SS Cam Piano Hinge 20° Open

HDWT-S0541 — **List Price** $ 325.00

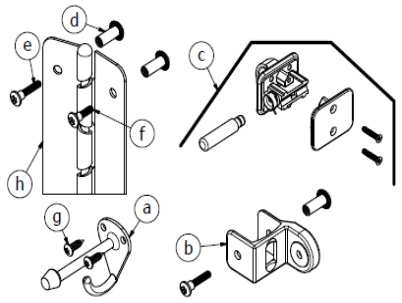

Includes:

	Part No.	Description	Qty.
a	HDWT-S285	Coat Hook w/Bumper	1
b	HDWT-S0119	Door Bumper & Keeper	1
c	HDWT-T290	Hardware Kit, Concealed Latch	1
d	FAST-P003	Screw #10-24 x 3/4" BTN Barrel-Female Torx-T27 w/Pin SS	15
e	FAST-P004A	Screw #10-24 x 1" Shoulder Torx-T27 SS	8
f	FAST-P004	Screw #10-24 x 3/4" BTN Step-Male Torx-T27	7
g	FAST-S351A	Screw #10 x 5/8" BTN Torx-T27 w/Pin SS	2
h	HDWT-S0404-57	Cam Piano Hinge, Continuous Stainless Steel 57"	1

Also available in 72"H - HDWT-S0541-72 — $ 537.00

NOTE: Torx bits are not included but can be ordered separately.

❺ Inswing Flat Strike SS Cam Piano Hinge 20° Open

HDWT-S0542 — **List Price** $ 325.00

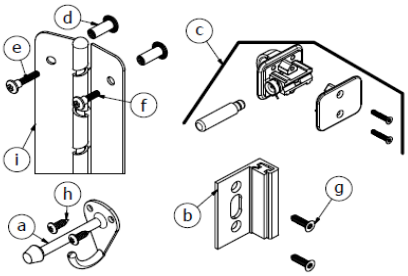

Includes:

	Part No.	Description	Qty.
a	HDWT-S285	Coat Hook w/Bumper	1
b	HDWT-S0022	Flat Strike/Keeper	1
c	HDWT-T290	Hardware Kit, Concealed Latch	1
d	FAST-P003	Screw #10-24 x 3/4" BTN Barrel-Female Torx-T27 w/Pin SS	14
e	FAST-P004A	Screw #10-24 x 1" Shoulder Torx-T27 SS	7
f	FAST-P004	Screw #10-24 x 3/4" BTN Step-Male Torx-T27	7
g	FAST-S0006	Screw #10 x 3/4" FL Sheet Metal Torx-T25	1
h	FAST-S351A	Screw #10 x 5/8" BTN Torx-T27 w/Pin SS	2
i	HDWT-S0404-57	Cam Piano Hinge, Continuous Stainless Steel 57"	1

Also available in 72"H - HDWT-S0542-72 — $ 537.00

NOTE: Torx bits are not included but can be ordered separately.

❺ Inswing Surface Latch SS Cam Piano Hinge 20° Open

HDWT-S0546 — **List Price** $ 325.00

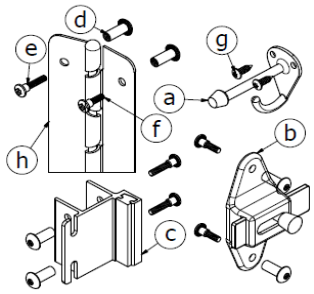

Includes:

	Part No.	Description	Qty.
a	HDWT-S285	Coat Hook w/Bumper	1
b	HDWT-S124	Slide Latch	1
c	HDWT-S0125	Strike/Keeper Inswing	1
d	FAST-P003	Screw #10-24 x 3/4" BTN Barrel-Female Torx-T27 w/Pin SS	18
e	FAST-P004A	Screw #10-24 x 1" Shoulder Torx-T27 SS	9
f	FAST-P004	Screw #10-24 x 3/4" BTN Step-Male Torx-T27	9
g	FAST-S351A	Screw #10 x 5/8" BTN Torx-T27 w/Pin SS	2
h	HDWT-S0404-57	Cam Piano Hinge, Continuous Stainless Steel 57"	1

Also available in 72"H - HDWT-S0546-72 — $ 537.00

NOTE: Torx bits are not included but can be ordered separately.

❺ Inswing Surface Flat Strike SS Cam Piano Hinge 20° Open

HDWT-S0547 — **List Price** $ 325.00

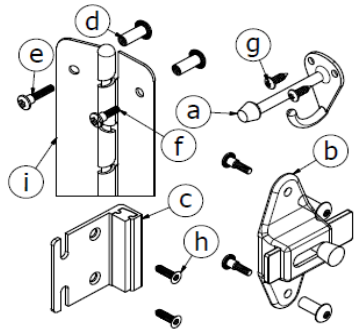

Includes:

	Part No.	Description	Qty.
a	HDWT-S285	Coat Hook w/Bumper	1
b	HDWT-S124	Slide Latch	1
c	HDWT-S0127	Flat Strike/Keeper Inswing	1
d	FAST-P003	Screw #10-24 x 3/4" BTN Barrel-Female Torx-T27 w/Pin SS	16
e	FAST-P004A	Screw #10-24 x 1" Shoulder Torx-T27 SS	7
f	FAST-P004	Screw #10-24 x 3/4" BTN Step-Male Torx-T27	9
g	FAST-S351A	Screw #10 x 5/8" BTN Torx-T27 w/Pin SS	2
h	FAST-S0006	Screw #10 x 3/4" FL Sheet Metal Torx-T25	2
i	HDWT-S0404-57	Cam Piano Hinge, Continuous Stainless Steel 57"	1

Also available in 72"H - HDWT-S0547-72 — $ 537.00

NOTE: Torx bits are not included but can be ordered separately.

Inswing Door Kits

5	Inswing ADA Surface SS Cam Piano Hinge Zero° Open	HDWT-S0548				List Price
		Includes:				$ 400.00
			Part No.	Description	Qty.	
		a	HDWT-S275	Coat Hook Outswing	1	
		b	HDWT-S124	Slide Latch	1	
		c	HDWT-S0125	Strike/Keeper Inswing	1	
		d	HDWT-S177	Wall Bumper	1	
		e	HDWT-S282	Door Pull	1	
		f	HDWT-S0167	Door Pull w/Counter	1	
		g	FAST-P003	Screw #10-24 x 3/4" BTN Barrel-Female Torx-T27 w/Pin SS	18	
		h	FAST-P004A	Screw #10-24 x 1" Shoulder Torx-T27 SS	9	
		i	FAST-P004	Screw #10-24 x 3/4" BTN Step-Male Torx-T27	9	
		j	FAST-S0027	Screw #10-24 x 2" Flat Machine Torx SS	2	
		k	FAST-S355A	Screw 1/4-14 X 5/8" Sheet Metal Torx-T27 w/Pin SS	2	
		l	FAST-S351A	Screw #10 x 5/8" BTN Torx-T27 w/Pin SS	2	
		m	HDWT-S0403-57	Cam Piano Hinge, Continuous Stainless Steel 57"	1	
		Also available in 69"H - HDWT-S0548-69				$ 660.00

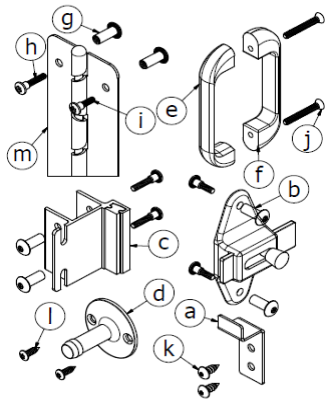

NOTE: Torx bits are not included but can be ordered separately.

5	Inswing ADA Surface Flat Strike SS Cam Piano Hinge Zero° Open	HDWT-S0549				List Price
		Includes:				$ 400.00
			Part No.	Description	Qty.	
		a	HDWT-S275	Coat Hook Outswing	1	
		b	HDWT-S124	Slide Latch	1	
		c	HDWT-S0127	Flat Strike/Keeper Inswing	1	
		d	HDWT-S177	Wall Bumper	1	
		e	HDWT-S282	Door Pull	1	
		f	HDWT-S0167	Door Pull w/Counter	1	
		g	FAST-P003	Screw #10-24 x 3/4" BTN Barrel-Female Torx-T27 w/Pin SS	16	
		h	FAST-P004A	Screw #10-24 x 1" Shoulder Torx-T27 SS	7	
		i	FAST-P004	Screw #10-24 x 3/4" BTN Step-Male Torx-T27	9	
		j	FAST-S0027	Screw #10-24 x 2" Flat Machine Torx SS	2	
		k	FAST-S355A	Screw 1/4-14 X 5/8" Sheet Metal Torx-T27 w/Pin SS	2	
		l	FAST-S351A	Screw #10 x 5/8" BTN Torx-T27 w/Pin SS	2	
		m	FAST-S0006	Screw #10 x 3/4" FL Sheet Metal Torx-T25	2	
		n	HDWT-S0403-57	Cam Piano Hinge, Continuous Stainless Steel 57"	1	
		Also available in 72"H - HDWT-S0549-69				$ 660.00

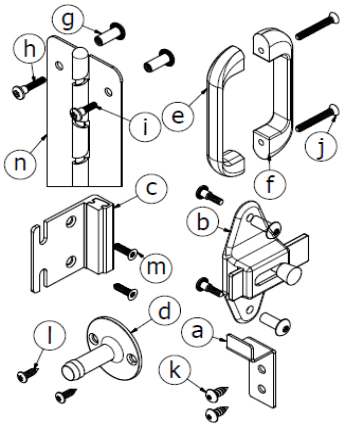

NOTE: Torx bits are not included but can be ordered separately.

Outswing Door Kits

❻ Outswing Door Kit	HDWT-ZD2			List Price
	Includes:			$ 99.00
	Part No.	Description	Qty.	
a	HDWT-T101	Top Hinge w/Bushing	1	
b	HDWT-T103	Pin, Top Hinge	1	
c	HDWT-T112	Bottom Hinge	1	
d	HDWT-T113	Pin, Bottom Hinge	1	
e	HDWT-T211	Cam, Bottom Hinge	1	
f	HDWT-T118	⅜"-16 Lock Nut, Bottom Hinge	1	
g	HDWT-T290	Hardware Kit, Concealed Latch	1	
h	HDWT-Z0119	Wrap Around Strike Keeper	1	
i	HDWT-S275	Coat Hook Outswing Stainless Steel	1	
j	FAST-Z003	Screw #10-24 x ¾" Barrel-Female Torx-T27 w/Pin ZP	5	
k	FAST-Z004A	Screw #10-24 x 1" Step-Male Torx-T27 w/Pin ZP	5	
l	FAST-Z0019	Screw #10 x ⅝" Sheet Metal Torx-T27 w/Pin ZP	2	
m	FAST-Z0016	Screw #14 x ⅝" Sheet Metal Torx-T27 w/Pin ZP	2	
n	HDWT-Z282	Door Pull ZP	1	
o	HDWT-Z177	Wall Bumper	1	
p	HDW0-Z0167	Door Pull with Countersink	1	
q	FAST-Z0027	Screw #10-24 x 2" Flat Machine Torx ZP	2	
	Also available in Stainless Steel - HDWT-SD2			$ 125.00

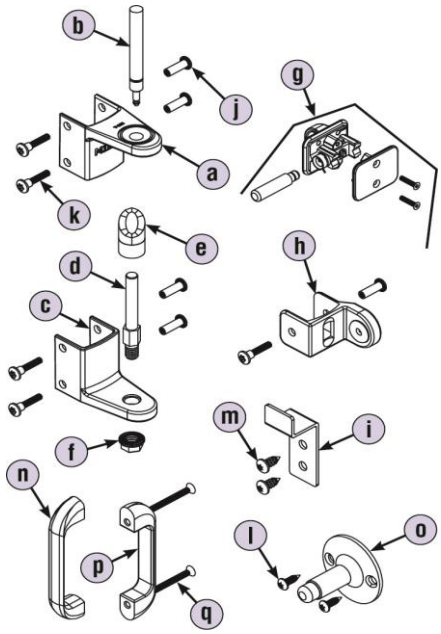

NOTE: Torx bits are not included but can be ordered separately.

❻ Outswing Door Kit with Flat Strike/Keeper	HDWT-ZD2-FS			List Price
	Includes:			$ 122.00
	Part No.	Description	Qty.	
a	HDWT-T101	Top Hinge w/Bushing	1	
b	HDWT-T103	Pin, Top Hinge	1	
c	HDWT-T112	Bottom Hinge	1	
d	HDWT-T113	Pin, Bottom Hinge	1	
e	HDWT-T211	Cam, Bottom Hinge	1	
f	HDWT-T118	⅜"-16 Lock Nut, Bottom Hinge	1	
g	HDWT-T290	Hardware Kit, Concealed Latch	1	
h	HDWT-Z0022	Flat Strike Keeper	1	
i	HDWT-S275	Coat Hook Outswing Stainless Steel	1	
j	FAST-Z003	Screw #10-24 x ¾" Barrel-Female Torx-T27 w/Pin ZP	4	
k	FAST-Z004A	Screw #10-24 x 1" Step-Male Torx-T27 w/Pin ZP	4	
l	FAST-Z0006	Screw #10 x ¾" FL Sheet Metal Torx-T25 w/Pin ZP	2	
m	FAST-Z0016	Screw #14 x ⅝" Sheet Metal Torx-T27 w/Pin ZP	2	
n	FAST-Z0019	Screw #10 x ⅝" Sheet Metal Torx-T27 w/Pin ZP	2	
o	HDWT-Z282	Door Pull ZP	1	
p	HDWT-Z177	Wall Bumper	1	
q	HDW0-Z0167	Door Pull with Countersink	1	
r	FAST-Z0027	Screw #10-24 x 2" Flat Machine Torx ZP	2	
	Also available in Stainless Steel - HDWT-SD2-FS			$ 220.00

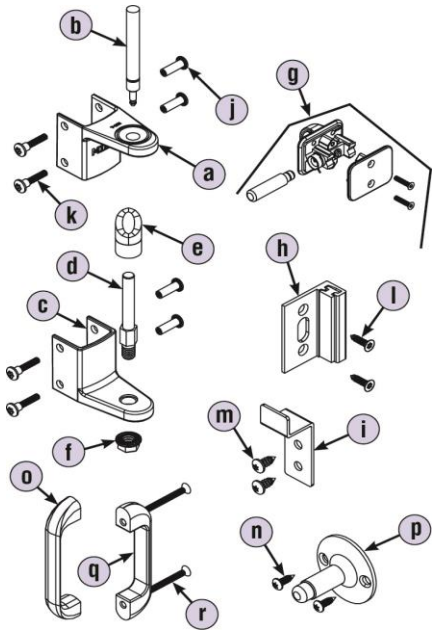

NOTE: Torx bits are not included but can be ordered separately.

Outswing Door Kits

❻ Outswing Door Kit with Flat Hinge	HDWT-ZD2-FH			List Price
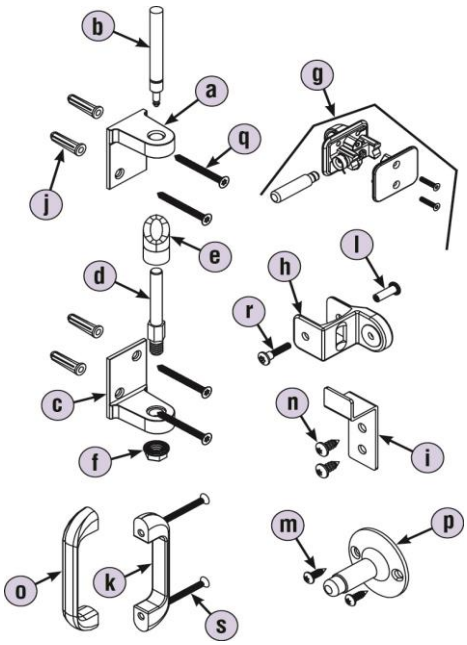	Includes:			$ 165.00
	Part No.	Description	Qty.	
	a	HDWT-S0149	Top Hinge Flat w/Bushing SS	1
	b	HDWT-T103	Pin, Top Hinge	1
	c	HDWT-S0150	Bottom Hinge Flat SS	1
	d	HDWT-T113	Pin, Bottom Hinge	1
	e	HDWT-T211	Cam, Bottom Hinge	1
	f	HDWT-T118	⅜"-16 Lock Nut, Bottom Hinge	1
	g	HDWT-T290	Hardware Kit, Concealed Latch	1
	h	HDWT-Z0119	Wrap Around Strike Keeper	1
	i	HDWT-S275	Coat Hook Outswing Stainless Steel	1
	j	FAST-T381	Anchor - Plastic #10-12 x 1" Lg.	4
	k	HDW0-Z0167	Door Pull with Countersink	1
	l	FAST-Z003	Screw #10-24 x ¾" Barrel-Female Torx-T27 w/Pin ZP	1
	m	FAST-Z0019	Screw #10 x ⅝" Sheet Metal Torx-T27 w/Pin ZP	2
	n	FAST-Z0016	Screw #14 x ⅝" Sheet Metal Torx-T27 w/Pin ZP	2
	o	HDWT-Z282	Door Pull ZP	1
	p	HDWT-Z177	Wall Bumper	1
	q	FAST-S0023	Screw #10 x 2" FL Sheet Metal Torx-T25 w/Pin SS	4
	r	FAST-Z004A	Screw #10-24 x 1" Step-Male Torx-T27 w/Pin ZP	1
	s	FAST-Z0027	Screw #10-24 x 2" Flat Machine Torx ZP	2
	Also available in Stainless Steel - HDWT-SD2-FH			$ 235.00

NOTE: Torx bits are not included but can be ordered separately.

❻ Outswing Door Kit with Flat Hinge & Strike/Keeper	HDWT-ZD2-FSH			List Price
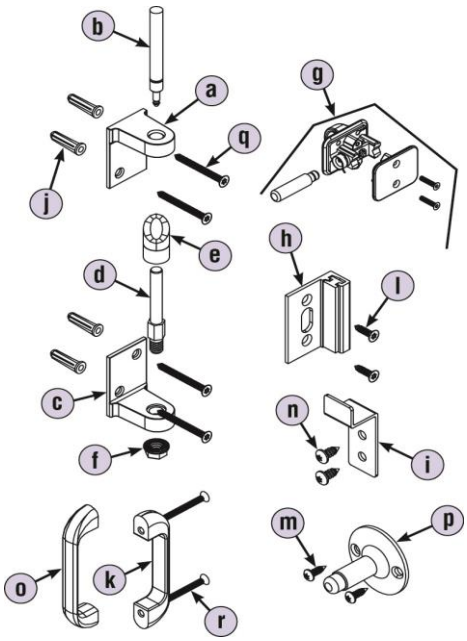	Includes:			$ 187.00
	Part No.	Description	Qty.	
	a	HDWT-S0149	Top Hinge Flat w/Bushing SS	1
	b	HDWT-T103	Pin, Top Hinge	1
	c	HDWT-S0150	Bottom Hinge Flat SS	1
	d	HDWT-T113	Pin, Bottom Hinge	1
	e	HDWT-T211	Cam, Bottom Hinge	1
	f	HDWT-T118	⅜"-16 Lock Nut, Bottom Hinge	1
	g	HDWT-T290	Hardware Kit, Concealed Latch	1
	h	HDWT-Z0022	Flat Strike/Keeper I/S & O/S	1
	i	HDWT-S275	Coat Hook Outswing Stainless Steel	1
	j	FAST-T381	Anchor - Plastic #10-12 x 1" Lg.	4
	k	HDW0-Z0167	Door Pull with Countersink	1
	l	FAST-Z0006	Screw #10 x ¾" FL Sheet Metal Torx-T25 w/Pin ZP	2
	m	FAST-Z0019	Screw #10 x ⅝" Sheet Metal Torx-T27 w/Pin ZP	2
	n	FAST-Z0016	Screw #14 x ⅝" Sheet Metal Torx-T27 w/Pin ZP	2
	o	HDWT-Z282	Door Pull ZP	1
	p	HDWT-Z177	Wall Bumper	1
	q	FAST-S0023	Screw #10 x 2" FL Sheet Metal Torx-T25 w/Pin SS	4
	r	FAST-Z0027	Screw #10-24 x 2" Flat Machine Torx ZP	2
	Also available in Stainless Steel - HDWT-SD2-FSH			$ 255.00

NOTE: Torx bits are not included but can be ordered separately.

Outswing Door Kits

❻ Outswing Door Kit with Surface Latch & W/A Strike/Keeper

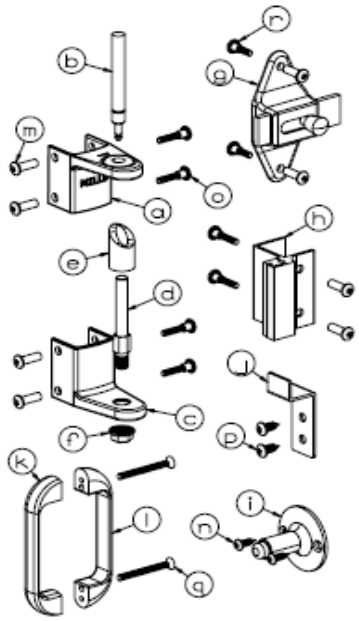

HDWT-ZD2-SLWS				List Price
Includes:				$ 105.00
	Part No.	Description	Qty.	
a	HDWT-T101	Top Hinge w/Bushing	1	
b	HDWT-T103	Pin, Top Hinge	1	
c	HDWT-T112	Bottom Hinge	1	
d	HDWT-T113	Pin, Bottom Hinge	1	
e	HDWT-T211	Cam, Bottom Hinge	1	
f	HDWT-T118	⅜"-16 Lock Nut, Bottom Hinge	1	
g	HDWT-Z0124	Latch, Slide Surface Mount ZP	1	
h	HDWT-Z0126	Strike/Keeper Outswing ZP	1	
i	HDWT-Z177	Wall Bumper	1	
j	HDWT-S275	Coat Hook Outswing Stainless Steel	1	
k	HDWT-Z282	Door Pull ZP	1	
l	HDW0-Z0167	Door Pull with Countersink	1	
m	FAST-Z004A	Screw #10-24 x 1" Step-Male Torx-T27 w/Pin ZP	6	
n	FAST-Z0019	Screw #10 x ⅝" Sheet Metal Torx-T27 w/Pin ZP	2	
o	FAST-Z003	Screw #10-24 x ¾" Barrel-Female Torx-T27 w/Pin ZP	8	
p	FAST-Z0016	Screw #14 x ⅝" Sheet Metal Torx-T27 w/Pin ZP	2	
q	FAST-Z0027	Screw #10-24 x 2" Flat Machine Torx ZP	2	
r	FAST-Z004	Screw #10-24 x ¾" Step-Male Torx-T27 ZP	2	
Also available in Stainless Steel - HDWT-SD2-SLWS				$ 214.00

NOTE: Torx bits are not included but can be ordered separately.

❻ Outswing Door Kit with Surface Latch & Flat Strike/Keeper

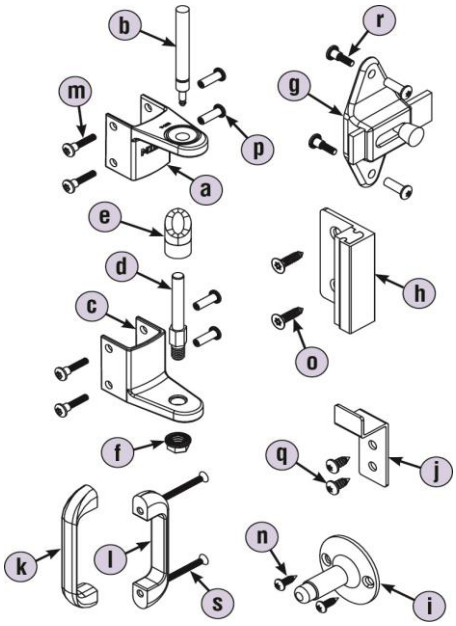

HDWT-ZD2-SLFS				List Price
Includes:				$ 87.00
	Part No.	Description	Qty.	
a	HDWT-T101	Top Hinge w/Bushing	1	
b	HDWT-T103	Pin, Top Hinge	1	
c	HDWT-T112	Bottom Hinge	1	
d	HDWT-T113	Pin, Bottom Hinge	1	
e	HDWT-T211	Cam, Bottom Hinge	1	
f	HDWT-T118	⅜"-16 Lock Nut, Bottom Hinge	1	
g	HDWT-Z0124	Latch, Slide Surface Mount ZP	1	
h	HDWT-Z0128	Flat Strike/Keeper Outswing ZP	1	
i	HDWT-Z177	Wall Bumper	1	
j	HDWT-S275	Coat Hook Outswing Stainless Steel	1	
k	HDWT-Z282	Door Pull ZP	1	
l	HDW0-Z0167	Door Pull with Countersink	1	
m	FAST-Z004A	Screw #10-24 x 1" Step-Male Torx-T27 w/Pin ZP	4	
n	FAST-Z0019	Screw #10 x ⅝" Sheet Metal Torx-T27 w/Pin ZP	2	
o	FAST-Z0006	Screw #10 x ¾" FL Sheet Metal Torx-T25 w/Pin ZP	2	
p	FAST-Z003	Screw #10-24 x ¾" Barrel-Female Torx-T27 w/Pin ZP	6	
q	FAST-Z0016	Screw #14 x ⅝" Sheet Metal Torx-T27 w/Pin ZP	2	
r	FAST-Z004	Screw #10-24 x ¾" Step-Male Torx-T27 ZP	2	
s	FAST-Z0027	Screw #10-24 x 2" Flat Machine Torx ZP	2	
Also available in Stainless Steel - HDWT-SD2-SLFS				$ 213.00

NOTE: Torx bits are not included but can be ordered separately.

Outswing Door Kits

❻ Outswing Door Kit with Piano Hinge (RHI/LHO)

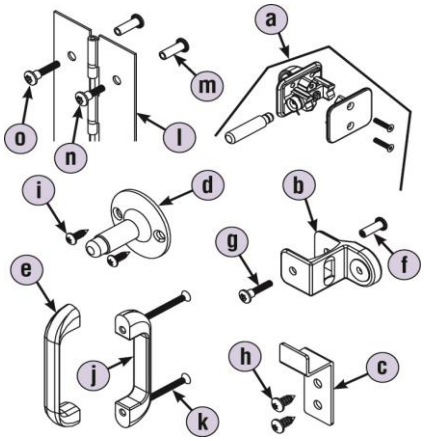

HDWT-Z0235				List Price
Includes:				$ 239.00
	Part No.	**Description**	**Qty.**	
a	HDWT-T290	Hardware Kit, Concealed Latch	1	
b	HDWT-Z0119	Wrap Around Strike Keeper	1	
c	HDWT-S275	Coat Hook Outswing Stainless Steel	1	
d	HDWT-Z177	Wall Bumper	1	
e	HDWT-Z282	Door Pull	1	
f	FAST-Z003	Screw #10-24 x ¾" Barrel-Female Torx-T27 w/Pin ZP	1	
g	FAST-Z004A	Screw #10-24 x 1" Step-Male Torx-T27 w/Pin ZP	1	
h	FAST-Z0016	Screw #14 x ⅝" Sheet Metal Torx-T27 w/Pin ZP	2	
i	FAST-Z0019	Screw #10 x ⅝" Sheet Metal Torx-T27 w/Pin ZP	2	
j	HDW0-Z0167	Door Pull with Countersink	1	
k	FAST-Z0027	Screw #10-24 x 2" Flat Machine Torx ZP	2	
l	HDWT-S0208	Piano Hinge, Continuous Stainless Steel (RHI-LHO)	1	
m	FAST-P003	Screw #10-24 x ¾" BTN Barrel-Female Torx-T27 w/Pin SS	14	
n	FAST-P004	Screw #10-24 x ¾" BTN Step-Male Torx-T27 SS	7	
o	FAST-P004A	Screw #10-24 x 1" Shoulder Torx-T27 SS	7	
Also available in Stainless Steel - HDWT-S0235				$ 296.00
Also available in Stainless Steel 69" & 72" Heights - HDWT-S0235-69/-72				$ 473.00

NOTE: Torx bits are not included but can be ordered separately.

❻ Outswing Door Kit with Piano Hinge (LHI/RHO)

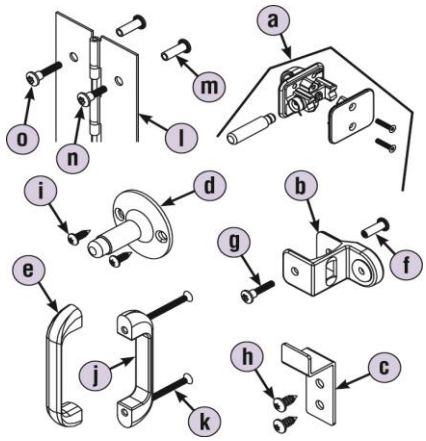

HDWT-Z0237				List Price
Includes:				$ 239.00
	Part No.	**Description**	**Qty.**	
a	HDWT-T290	Hardware Kit, Concealed Latch	1	
b	HDWT-Z0119	Wrap Around Strike Keeper	1	
c	HDWT-S275	Coat Hook Outswing Stainless Steel	1	
d	HDWT-Z177	Wall Bumper	1	
e	HDWT-Z282	Door Pull	1	
f	FAST-Z003	Screw #10-24 x ¾" Barrel-Female Torx-T27 w/Pin ZP	1	
g	FAST-Z004A	Screw #10-24 x 1" Step-Male Torx-T27 w/Pin ZP	1	
h	FAST-Z0016	Screw #14 x ⅝" Sheet Metal Torx-T27 w/Pin ZP	2	
i	FAST-Z0019	Screw #10 x ⅝" Sheet Metal Torx-T27 w/Pin ZP	2	
j	HDW0-Z0167	Door Pull with Countersink	1	
k	FAST-Z0027	Screw #10-24 x 2" Flat Machine Torx ZP	2	
l	HDWT-S0209	Piano Hinge, Continuous Stainless Steel (LHI-RHO)	1	
m	FAST-P003	Screw #10-24 x ¾" BTN Barrel-Female Torx-T27 w/Pin SS	14	
n	FAST-P004	Screw #10-24 x ¾" BTN Step-Male Torx-T27 SS	7	
o	FAST-P004A	Screw #10-24 x 1" Shoulder Torx-T27 SS	7	
Also available in Stainless Steel - HDWT-S0237				$ 296.00
Also available in Stainless Steel 69" & 72" Heights - HDWT-S0237-69/-72				$ 473.00

NOTE: Torx bits are not included but can be ordered separately.

Outswing Door Kits

❻ Outswing Flat Strike Door Kit with Piano Hinge (RHI/LHO)	HDWT-Z0239				List Price
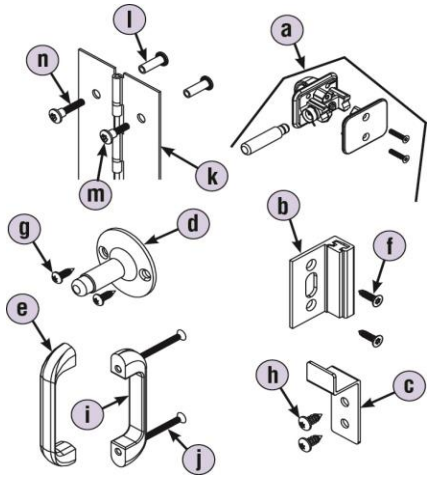	Includes:				$ 239.00
		Part No.	Description	Qty.	
	a	HDWT-T290	Hardware Kit, Concealed Latch	1	
	b	HDWT-Z0022	Flat Strike Keeper	1	
	c	HDWT-S275	Coat Hook Outswing Stainless Steel	1	
	d	HDWT-Z177	Wall Bumper	1	
	e	HDWT-Z282	Door Pull	1	
	f	FAST-Z0006	Screw #10 x ¾" FL Sheet Metal Torx-T25 w/Pin ZP	2	
	g	FAST-Z0019	Screw #10 x ⅝" Sheet Metal Torx-T27 w/Pin ZP	2	
	h	FAST-Z0016	Screw #14 x ⅝" Sheet Metal Torx-T27 w/Pin ZP	2	
	i	HDW0-Z0167	Door Pull with Countersink	1	
	j	FAST-Z0027	Screw #10-24 x 2" Flat Machine Torx ZP	2	
	k	HDWT-S0208	Piano Hinge, Continuous Stainless Steel (RHI-LHO)	1	
	l	FAST-P003	Screw #10-24 x ¾" BTN Barrel-Female Torx-T27 w/Pin SS	14	
	m	FAST-P004	Screw #10-24 x ¾" BTN Step-Male Torx-T27 SS	7	
	n	FAST-P004A	Screw #10-24 x 1" Shoulder Torx-T27 SS	7	
	Also available in Stainless Steel - HDWT-S0239				$ 296.00
	Also available in Stainless Steel 69" & 72" Heights - HDWT-S0239-69/-72				$ 473.00

NOTE: Torx bits are not included but can be ordered separately.

❻ Outswing Flat Strike Door Kit with Piano Hinge (LHI/RHO)	HDWT-Z0241				List Price
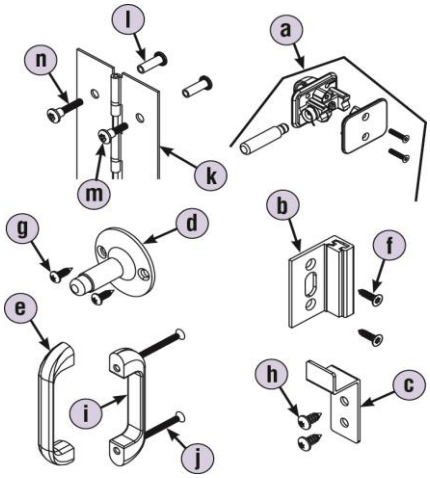	Includes:				$ 239.00
		Part No.	Description	Qty.	
	a	HDWT-T290	Hardware Kit, Concealed Latch	1	
	b	HDWT-Z0022	Flat Strike Keeper	1	
	c	HDWT-S275	Coat Hook Outswing Stainless Steel	1	
	d	HDWT-Z177	Wall Bumper	1	
	e	HDWT-Z282	Door Pull	1	
	f	FAST-Z0006	Screw #10 x ¾" FL Sheet Metal Torx-T25 w/Pin ZP	2	
	g	FAST-Z0019	Screw #10 x ⅝" Sheet Metal Torx-T27 w/Pin ZP	2	
	h	FAST-Z0016	Screw #14 x ⅝" Sheet Metal Torx-T27 w/Pin ZP	2	
	i	HDW0-Z0167	Door Pull with Countersink	1	
	j	FAST-Z0027	Screw #10-24 x 2" Flat Machine Torx ZP	2	
	k	HDWT-S0209	Piano Hinge, Continuous Stainless Steel (LHI-RHO)	1	
	l	FAST-P003	Screw #10-24 x ¾" BTN Barrel-Female Torx-T27 w/Pin SS	14	
	m	FAST-P004	Screw #10-24 x ¾" BTN Step-Male Torx-T27 SS	7	
	n	FAST-P004A	Screw #10-24 x 1" Shoulder Torx-T27 SS	7	
	Also available in Stainless Steel - HDWT-S0241				$ 296.00
	Also available in Stainless Steel 69" & 72" Heights - HDWT-S0241-69/-72				$ 473.00

NOTE: Torx bits are not included but can be ordered separately.

Outswing Door Kits

❻	Outswing Surface Latch SS Piano Hinge (58" Door)	HDWT-S0247 (RHI/LHO)			List Price
		Includes:			$ 296.00
			Part No.	Description	Qty.
		a	HDWT-S0124	Slide Latch	1
		b	HDWT-S0126	Flat Strike/Keeper Inswing	1
		c	HDWT-S177	Wall Bumper	1
		d	HDWT-S282	Door Pull	1
		e	HDWT-S275	Coat Hook Outswing	1
		f	FAST-P003	Screw #10-24 x 3/4" BTN Barrel-Female Torx-T27 w/Pin SS	18
		g	FAST-P004A	Screw #10-24 x 1" Shoulder Torx-T27 SS	9
		h	FAST-P004	Screw #10-24 x 3/4" BTN Step-Male Torx-T27	9
		i	FAST-S351A	Screw #10 x 5/8" BTN Torx-T27 w/Pin SS	2
		j	FAST-S0027	Screw #10-24 x 2" Flat Machine Torx SS	2
		k	FAST-S355A	Screw 1/4-14 X 5/8" Sheet Metal Torx-T27 w/Pin SS	2
		l	HDW0-S0167	Door Pull w/Counter	1
		m	HDWT-S0208	Piano Hinge, Continuous Stainless Steel 57-1/2" RHI/LHO	1
		Also available in 69" & 72" Heights - HDWT-S0247-69/-72			$ 473.00

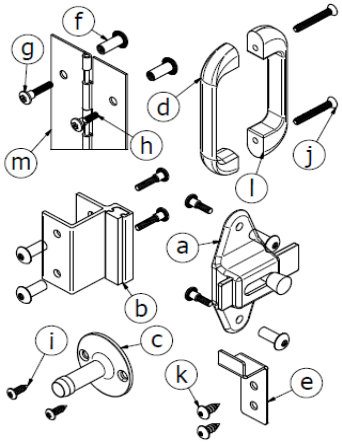

NOTE: Torx bits are not included but can be ordered separately.

❻	Outswing Surface Latch SS Piano Hinge (58" Door)	HDWT-S0249 (LHI/RHO)			List Price
		Includes:			$ 296.00
			Part No.	Description	Qty.
		a	HDWT-S0124	Slide Latch	1
		b	HDWT-S0126	Flat Strike/Keeper Inswing	1
		c	HDWT-S177	Wall Bumper	1
		d	HDWT-S282	Door Pull	1
		e	HDWT-S275	Coat Hook Outswing	1
		f	FAST-P003	Screw #10-24 x 3/4" BTN Barrel-Female Torx-T27 w/Pin SS	18
		g	FAST-P004A	Screw #10-24 x 1" Shoulder Torx-T27 SS	9
		h	FAST-P004	Screw #10-24 x 3/4" BTN Step-Male Torx-T27	9
		i	FAST-S351A	Screw #10 x 5/8" BTN Torx-T27 w/Pin SS	2
		j	FAST-S0027	Screw #10-24 x 2" Flat Machine Torx SS	2
		k	FAST-S355A	Screw 1/4-14 X 5/8" Sheet Metal Torx-T27 w/Pin SS	2
		l	HDW0-S0167	Door Pull w/Counter	1
		m	HDWT-S0209	Piano Hinge, Continuous Stainless Steel 57-1/2" LHI/RHO	1
		Also available in 69" & 72" Heights - HDWT-S0249-69/-72			$ 473.00

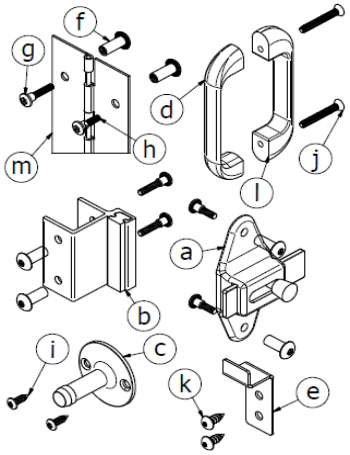

NOTE: Torx bits are not included but can be ordered separately.

Outswing Door Kits

6	Outswing Surface Flat Strike SS Piano Hinge (58" Door)	HDWT-S0251 (RHI/LHO)			List Price
		Includes:			$ 296.00
			Part No.	Description	Qty.
		a	HDWT-S0124	Slide Latch	1
		b	HDWT-S0128	Flat Strike/Keeper Outswing	1
		c	HDWT-S177	Wall Bumper	1
		d	HDWT-S282	Door Pull	1
		e	HDWT-S275	Coat Hook Outswing	1
		f	FAST-P003	Screw #10-24 x 3/4" BTN Barrel-Female Torx-T27 w/Pin SS	16
		g	FAST-P004A	Screw #10-24 x 1" Shoulder Torx-T27 SS	7
		h	FAST-P004	Screw #10-24 x 3/4" BTN Step-Male Torx-T27	9
		i	FAST-S351A	Screw #10 x 5/8" BTN Torx-T27 w/Pin SS	2
		j	FAST-S0027	Screw #10-24 x 2" Flat Machine Torx SS	2
		k	FAST-S355A	Screw 1/4-14 X 5/8" Sheet Metal Torx-T27 w/Pin SS	2
		l	HDW0-S0167	Door Pull w/Counter	1
		m	FAST-S0006	Screw #10 x 3/4" FL Sheet Metal Torx-T25	2
		n	HDWT-S0208	Piano Hinge, Continuous Stainless Steel 57-1/2" RHI/LHO	1
		Also available in 69" & 72" Heights - HDWT-S0251-69/-72			$ 473.00

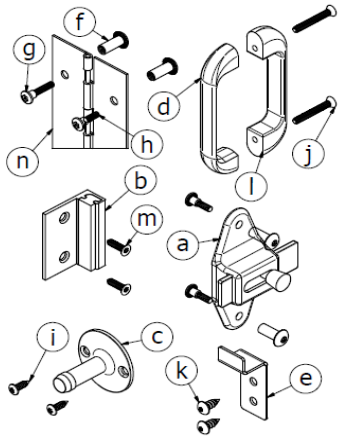

NOTE: Torx bits are not included but can be ordered separately.

6	Outswing Surface Flat Strike SS Piano Hinge (58" Door)	HDWT-S0253 (LHI/RHO)			List Price
		Includes:			$ 296.00
			Part No.	Description	Qty.
		a	HDWT-S0124	Slide Latch	1
		b	HDWT-S0128	Flat Strike/Keeper Outswing	1
		c	HDWT-S177	Wall Bumper	1
		d	HDWT-S282	Door Pull	1
		e	HDWT-S275	Coat Hook Outswing	1
		f	FAST-P003	Screw #10-24 x 3/4" BTN Barrel-Female Torx-T27 w/Pin SS	16
		g	FAST-P004A	Screw #10-24 x 1" Shoulder Torx-T27 SS	7
		h	FAST-P004	Screw #10-24 x 3/4" BTN Step-Male Torx-T27	9
		i	FAST-S351A	Screw #10 x 5/8" BTN Torx-T27 w/Pin SS	2
		j	FAST-S0027	Screw #10-24 x 2" Flat Machine Torx SS	2
		k	FAST-S355A	Screw 1/4-14 X 5/8" Sheet Metal Torx-T27 w/Pin SS	2
		l	HDW0-S0167	Door Pull w/Counter	1
		m	FAST-S0006	Screw #10 x 3/4" FL Sheet Metal Torx-T25	2
		n	HDWT-S0209	Piano Hinge, Continuous Stainless Steel 57-1/2" LHI/RHO	1
		Also available in 69" & 72" Heights - HDWT-S0253-69/-72			$ 473.00

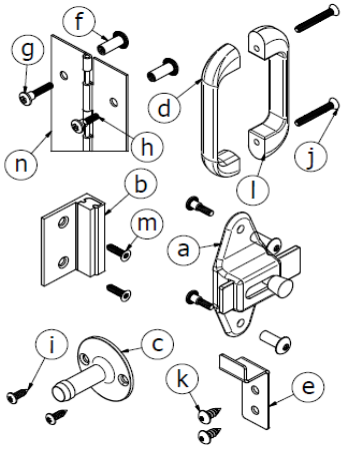

NOTE: Torx bits are not included but can be ordered separately.

Outswing Door Kits

❻	Outswing SS Cam Piano Hinge Zero° Open	HDWT-S0539			List Price
		Includes:			$ 396.00
			Part No.	Description	Qty.
		a	HDWT-S275	Coat Hook Outswing	1
		b	HDWT-S0119	Door Bumper & Keeper	1
		c	HDWT-T290	Hardware Kit, Concealed Latch	1
		d	HDWT-S177	Wall Bumper	1
		e	HDWT-S282	Door Pull	1
		f	HDWT-S0167	Door Pull w/Counter	1
		g	FAST-P003	Screw #10-24 x 3/4" BTN Barrel-Female Torx-T27 w/Pin SS	15
		h	FAST-P004A	Screw #10-24 x 1" Shoulder Torx-T27 SS	8
		i	FAST-P004	Screw #10-24 x 3/4" BTN Step-Male Torx-T27	7
		j	FAST-S0027	Screw #10-24 x 2" Flat Machine Torx SS	2
		k	FAST-S355A	Screw 1/4-14 X 5/8" Sheet Metal Torx-T27 w/Pin SS	2
		l	FAST-S351A	Screw #10 x 5/8" BTN Torx-T27 w/Pin SS	2
		m	HDWT-S0403-57	Cam Piano Hinge, Continuous Stainless Steel 57"	1
		Also available in 69" & 72" Heights - HDWT-S0539-69/-72			$ 634.00

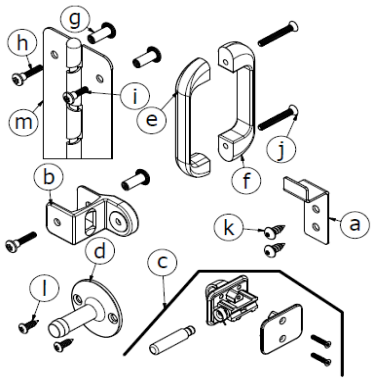

NOTE: Torx bits are not included but can be ordered separately.

❻	Outswing Flat Strike SS Cam Piano Hinge Zero° Open	HDWT-S0540			List Price
		Includes:			$ 396.00
			Part No.	Description	Qty.
		a	HDWT-S275	Coat Hook Outswing	1
		b	HDWT-S0022	Flat Strike/Keeper	1
		c	HDWT-T290	Hardware Kit, Concealed Latch	1
		d	HDWT-S177	Wall Bumper	1
		e	HDWT-S282	Door Pull	1
		f	HDWT-S0167	Door Pull w/Counter	1
		g	FAST-P003	Screw #10-24 x 3/4" BTN Barrel-Female Torx-T27 w/Pin SS	14
		h	FAST-P004A	Screw #10-24 x 1" Shoulder Torx-T27 SS	7
		i	FAST-P004	Screw #10-24 x 3/4" BTN Step-Male Torx-T27	7
		j	FAST-S0027	Screw #10-24 x 2" Flat Machine Torx SS	2
		k	FAST-S355A	Screw 1/4-14 X 5/8" Sheet Metal Torx-T27 w/Pin SS	2
		l	FAST-S351A	Screw #10 x 5/8" BTN Torx-T27 w/Pin SS	2
		m	FAST-S0006	Screw #10 x 3/4" FL Sheet Metal Torx-T25	2
		n	HDWT-S0403-57	Cam Piano Hinge, Continuous Stainless Steel 57"	1
		Also available in 69" & 72" Heights - HDWT-S0540-69/-72			$ 634.00

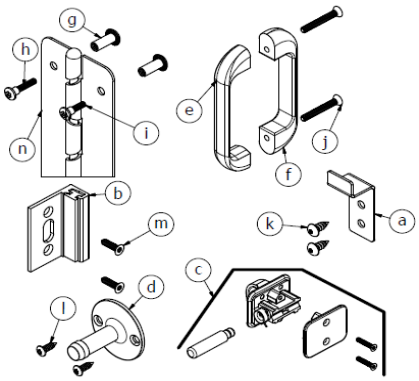

NOTE: Torx bits are not included but can be ordered separately.

Outswing Door Kits

6	Outswing Surface Latch SS Cam Piano Hinge Zero° Open	HDWT-S0543				List Price
		Includes:				$ 396.00
			Part No.	Description	Qty.	
		a	HDWT-S275	Coat Hook Outswing	1	
		b	HDWT-S124	Slide Latch	1	
		c	HDWT-S0126	Flat Strike/Keeper Inswing	1	
		d	HDWT-S177	Wall Bumper	1	
		e	HDWT-S282	Door Pull	1	
		f	HDWT-S0167	Door Pull w/Counter	1	
		g	FAST-P003	Screw #10-24 x 3/4" BTN Barrel-Female Torx-T27 w/Pin SS	18	
		h	FAST-P004A	Screw #10-24 x 1" Shoulder Torx-T27 SS	9	
		i	FAST-P004	Screw #10-24 x 3/4" BTN Step-Male Torx-T27	9	
		j	FAST-S0027	Screw #10-24 x 2" Flat Machine Torx SS	2	
		k	FAST-S355A	Screw 1/4-14 X 5/8" Sheet Metal Torx-T27 w/Pin SS	2	
		l	FAST-S351A	Screw #10 x 5/8" BTN Torx-T27 w/Pin SS	2	
		m	HDWT-S0403-57	Cam Piano Hinge, Continuous Stainless Steel 57"	1	
		Also available in 69" & 72" Heights - HDWT-S0543-69/-72				$ 634.00

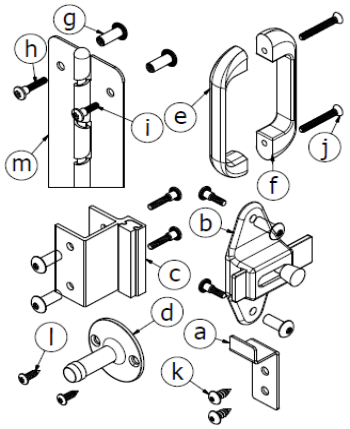

NOTE: Torx bits are not included but can be ordered separately.

6	Outswing Surface Flat Strike SS Cam Piano Hinge Zero° Open	HDWT-S0544				List Price
		Includes:				$ 396.00
			Part No.	Description	Qty.	
		a	HDWT-S275	Coat Hook Outswing	1	
		b	HDWT-S124	Slide Latch	1	
		c	HDWT-S0128	Flat Strike/KeeperOutswing	1	
		d	HDWT-S177	Wall Bumper	1	
		e	HDWT-S282	Door Pull	1	
		f	HDWT-S0167	Door Pull w/Counter	1	
		g	FAST-P003	Screw #10-24 x 3/4" BTN Barrel-Female Torx-T27 w/Pin SS	16	
		h	FAST-P004A	Screw #10-24 x 1" Shoulder Torx-T27 SS	7	
		i	FAST-P004	Screw #10-24 x 3/4" BTN Step-Male Torx-T27	9	
		j	FAST-S0027	Screw #10-24 x 2" Flat Machine Torx SS	2	
		k	FAST-S355A	Screw 1/4-14 X 5/8" Sheet Metal Torx-T27 w/Pin SS	2	
		l	FAST-S351A	Screw #10 x 5/8" BTN Torx-T27 w/Pin SS	2	
		m	FAST-S0006	Screw #10 x 3/4" FL Sheet Metal Torx-T25	2	
		n	HDWT-S0403-57	Cam Piano Hinge, Continuous Stainless Steel 57"	1	
		Also available in 69" & 72" Heights - HDWT-S0544-69/-72				$ 634.00

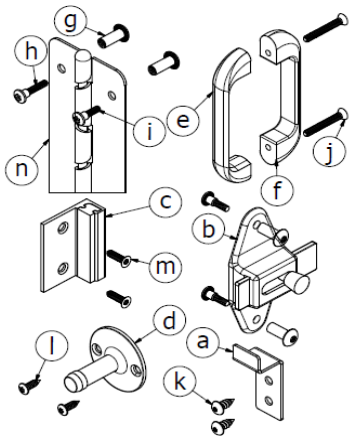

NOTE: Torx bits are not included but can be ordered separately.

Pilaster-Panel Kits

❼ Pilaster at Wall "F" Bracket — **HDWT-Z3FF** — **List Price**

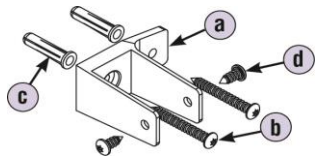

Includes: — $ 40.00

	Part No.	Description	Qty.
a	HDWT-T337	Bracket, Single-Ear 1¼" x 2½"	2
b	FAST-Z002	Screw #14 x 2" Sheet Metal Torx-T27 w/Pin ZP	4
c	FAST-T373	Anchor - Plastic #14-16 x 1⅜" Lg.	4
d	FAST-Z0016	Screw #14 x ⅝" Sheet Metal Torx-T27 w/Pin ZP	4

Also available in Stainless Steel - HDWT-S3FF — $ 71.00

NOTE: Torx bits are not included but can be ordered separately.

❼ Pilaster at Wall "F" Bracket (Stainless Continuous) — **HDWT-S0480-57** — **List Price**

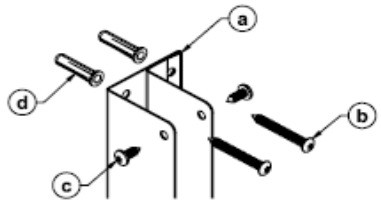

Includes: — $ 98.00

	Part No.	DESCRIPTION	Qty.
a	HDWT-S184-57	Bracket "1-Ear" Continuous 1-1/4" X 57" Stainless	1
b	FAST-P002	Screw #14 X 2" BTN Sheet Metal Torx-T27 w/Pin SS	10
c	FAST-S355A	Screw 1/4-14 X 5/8" Sheet Metal Torx-T27 w/Pin SS	10
d	FAST-T373	Anchor - Plastic #14-16 X 1-3/8" Lg.	10

Also available in 68" & 71" Heights - HDWT-S0480-68/-71 — $ 135.00

NOTE: Torx bits are not included but can be ordered separately.

❼ Pilaster at Wall "F" Bracket (Aluminum Continuous) — **HDWT-A0040** — **List Price**

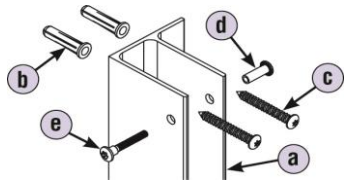

Includes: — $ 92.00

	Part No.	Description	Qty.
a	HDWT-A184	Bracket, Continuous, 1¼" Single-Ear Aluminum	1
b	FAST-T373	Anchor - Plastic #14-16 x 1⅜" Lg.	10
c	FAST-P002	Screw #14 x 2" BTN Sheet Metal Torx-T27 w/Pin SS	10
d	FAST-P003	Screw #10-24 x ¾" BTN Barrel-Female Torx-T27 w/Pin SS	5
e	FAST-P004A	Screw #10-24 x 1" Shoulder Torx-T27 SS	5

NOTE: Torx bits are not included but can be ordered separately.

❼ Pilaster at Wall Mini "F" Bracket — **HDWT-Z0068** — **List Price**

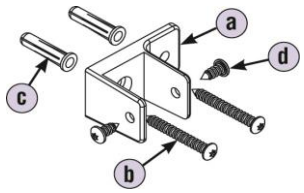

Includes: — $ 27.00

	Part No.	Description	Qty.
a	HDWT-Z0037	Bracket, Mini "F" Single-Ear 1¼" x 1¾"	2
b	FAST-Z002	Screw #14 x 2" Sheet Metal Torx-T27 w/Pin ZP	4
c	FAST-T373	Anchor - Plastic #14-16 x 1⅜" Lg.	4
d	FAST-Z0016	Screw #14 x ⅝" Sheet Metal Torx-T27 w/Pin ZP	4

Also available in Stainless Steel - HDWT-S0068 — $ 92.00

NOTE: Torx bits are not included but can be ordered separately.

❼ Pilaster at Pilaster/Panel "F" Bracket — **HDWT-Z0016** — **List Price**

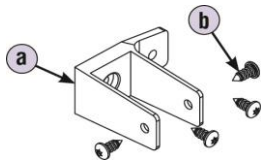

Includes: — $ 37.00

	Part No.	Description	Qty.
a	HDWT-T337	Bracket, Single-Ear 1¼" x 2½"	2
b	FAST-Z0016	Screw #14 x ⅝" Sheet Metal Torx-T27 w/Pin ZP	8

Also available in Stainless Steel - HDWT-S0016 — $ 66.00

NOTE: Torx bits are not included but can be ordered separately.

Pilaster-Panel Kits

❼	Pilaster at Pilaster/Panel "F" Bracket (Stainless Continuous)	HDWT-S0481-57				List Price
		Includes:				$ 94.00
			Part No.	Description	Qty.	
		a	HDWT-S184-57	Bracket "1-ear" Continuous 1-1/4" X 57" Stainless	1	
		b	FAST-S355A	Screw 1/4-14 X 5/8" Sheet Metal Torx-T27 w/Pin SS	20	
		Also available in 68" & 71" Heights - HDWT-S0481-68/-71				$ 126.00

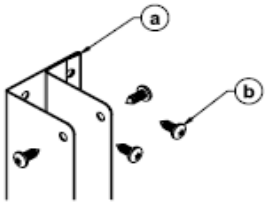

NOTE: Torx bits are not included but can be ordered separately.

❼	Pilaster at Pilaster/Panel "F" Bracket (Aluminum Continuous)	HDWT-A0041				List Price
		Includes:				$ 89.00
			Part No.	Description	Qty.	
		a	HDWT-A184	Bracket, Continuous, 1¼" Single-Ear Aluminum	1	
		b	FAST-S355A	Screw ¼-14 x ⅝" Sheet Metal Torx-T27 w/Pin SS	10	
		c	FAST-P004A	Screw #10-24 x 1" Shoulder Torx-T27 SS	5	
		d	FAST-P003	Screw #10-24 x ¾" BTN Barrel-Female Torx-T27 w/Pin SS	5	

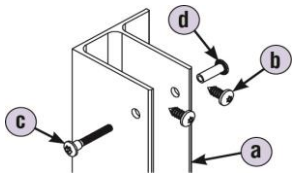

NOTE: Torx bits are not included but can be ordered separately.

Dividing Panel and Ending Panel Kits

❽ Dividing Panel Kit — **HDWT-Z1PD** — **List Price**

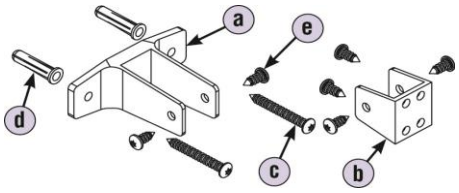

Includes: — $ 26.00

	Part No.	Description	Qty.
a	HDWT-T334	Bracket, Double-Ear 1" x 2½"	2
b	HDWT-T336	Bracket, No-Ear 1" x 1⅜"	2
c	FAST-Z002	Screw #14 x 2" Sheet Metal Torx-T27 w/Pin ZP	4
d	FAST-T373	Anchor - Plastic #14-16 x 1⅜" Lg.	4
e	FAST-Z0016	Screw #14 x ⅝" Sheet Metal Torx-T27 w/Pin ZP	12

Also available in Stainless Steel - HDWT-S1PD — $ 79.00

NOTE: Torx bits are not included but can be ordered separately.

❽ Dividing Panel Kit (Aluminum Continuous) — **HDWT-A0055** — **List Price**

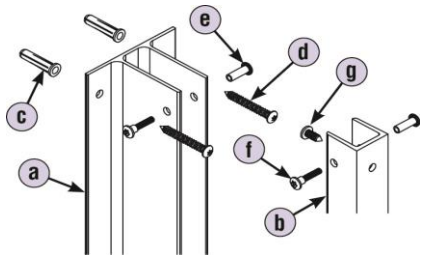

Includes: — $ 136.00

	Part No.	Description	Qty.
a	HDWT-A186	Bracket, Continuous, Double-Ear Aluminum	1
b	HDWT-A185	Bracket, Continuous, "U"	1
c	FAST-T373	Anchor - Plastic #14-16 x 1⅜" Lg.	10
d	FAST-P002	Screw #14 x 2" BTN Sheet Metal Torx-T27 w/Pin SS	10
e	FAST-P003	Screw #10-24 x ¾" BTN Barrel-Female Torx-T27 w/Pin SS	10
f	FAST-P004	Screw #10-24 x ¾" BTN Step-Male Torx-T27 SS	10
g	FAST-S355A	Screw ¼-14 x ⅝" Sheet Metal Torx-T27 w/Pin SS	5

NOTE: Torx bits are not included but can be ordered separately.

❾ Ending Panel Kit — **HDWT-Z2PE** — **List Price**

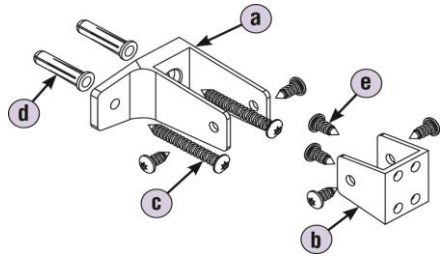

Includes: — $ 26.00

	Part No.	Description	Qty.
a	HDWT-T332	Bracket, Single-Ear 1" x 2½"	2
b	HDWT-T336	Bracket, No-Ear 1" x 1⅜"	2
c	FAST-Z002	Screw #14 x 2" Sheet Metal Torx-T27 w/Pin ZP	4
d	FAST-T373	Anchor - Plastic #14-16 x 1⅜" Lg.	4
e	FAST-Z0016	Screw #14 x ⅝" Sheet Metal Torx-T27 w/Pin ZP	12

Also available in Stainless Steel - HDWT-S2PE — $ 75.00

NOTE: Torx bits are not included but can be ordered separately.

❾ Ending Panel Kit (Aluminum Continuous) — **HDWT-A0056** — **List Price**

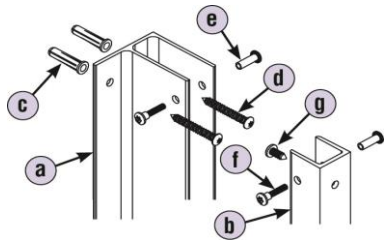

Includes: — $ 126.00

	Part No.	Description	Qty.
a	HDWT-A183	Bracket, Continuous, 1" Single-Ear Aluminum	1
b	HDWT-A185	Bracket, Continuous, "U"	1
c	FAST-T373	Anchor - Plastic #14-16 x 1⅜" Lg.	10
d	FAST-P002	Screw #14 x 2" BTN Sheet Metal Torx-T27 w/Pin SS	10
e	FAST-P003	Screw #10-24 x ¾" BTN Barrel-Female Torx-T27 w/Pin SS	10
f	FAST-P004	Screw #10-24 x ¾" BTN Step-Male Torx-T27 SS	10
g	FAST-S355A	Screw ¼-14 x ⅝" Sheet Metal Torx-T27 w/Pin SS	5

NOTE: Torx bits are not included but can be ordered separately.

Dividing Panel and Ending Panel Kits

❽	Dividing/Ending Panel @Wall Kit (Stainless Continuous)	HDWT-S0475-57				List Price
❾	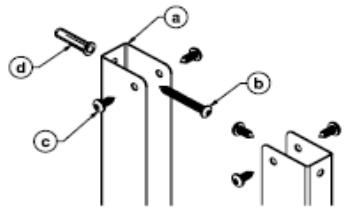	Includes:				$ 170.00
			Part No.	Description	Qty.	
		a	S190-02-57	Bracket "U" Continuous 2" X 57"	2	
		b	FAST-P002	Screw #14 X 2" BTN Sheet Metal Torx-T27 w/Pin SS	5	
		c	FAST-S355A	Screw 1/4-14 X 5/8" Sheet Metal Torx-T27 w/Pin SS	25	
		d	FAST-T373	Anchor - Plastic #14-16 X 1-3/8" Lg.	5	
		Also available in 68" & 71" Heights - HDWT-S0475-68/-71				$ 208.00

NOTE: Torx bits are not included but can be ordered separately.

❽	Dividing/Ending Panel @Pilaster Kit (Stainless Continuous)	HDWT-S0476-57				List Price
❾	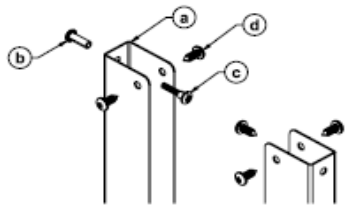	Includes:				$ 170.00
			Part No.	Description	Qty.	
		a	S190-02-57	Bracket "U" Continuous 2" X 57"	2	
		b	FAST-P003	Screw #10-24 X 3/4" BTN Barrel-Female Torx-T27 w/Pin SS	5	
		c	FAST-P004A	Screw #10-24 X 1" BTN Step-Male Torx-T27 w/Pin SS	5	
		d	FAST-S355A	Screw 1/4-14 X 5/8" Sheet Metal Torx-T27 w/Pin SS	25	
		Also available in 68" & 71" Heights - HDWT-S0476-68/-71				$ 208.00

NOTE: Torx bits are not included but can be ordered separately.

Additional Kits

Alcove Kit — **HDWT-Z4AL** — **List Price** $ 29.00

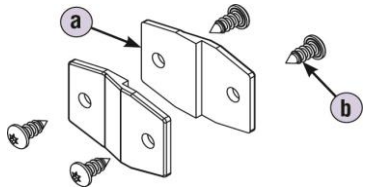

Includes:

	Part No.	Description	Qty.
a	HDWT-T341	Bracket, Alcove Offset	4
b	FAST-Z0016	Screw #14 x ⅝" Sheet Metal Torx-T27 w/Pin ZP	8

Also available in Stainless Steel - HDWT-S4AL — $ 68.00

NOTE: Torx bits are not included but can be ordered separately.

Alcove Kit (Continuous) — **HDWT-S0479-57** — **List Price** $ 158.00

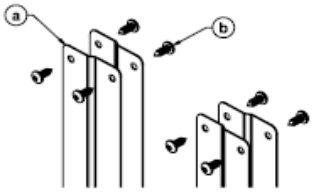

Includes:

	PART NO.	DESCRIPTION	Qty.
a	HDWT-S0290-57	Bracket Continuous Alcove Offset	4
b	FAST-S355A	Screw 1/4-14 X 5/8" Sheet Metal Torx-T27 w/Pin SS	40

Also available in 68" & 71" Heights - HDWT-S0479-68/-71 — $ 308.00

Dividing Alcove Panel Kit (Zamac Stirrup) — **HDWT-Z0286** — **List Price** $ 33.00

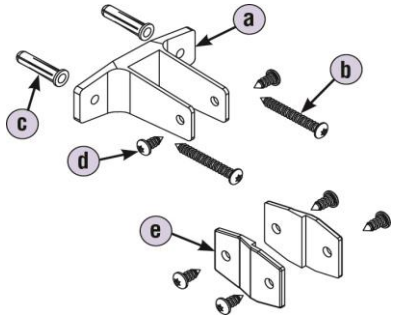

Includes:

	Part No.	Description	Qty.
a	HDWT-T334	Bracket, Double-Ear 1" x 2½"	2
b	FAST-Z002	Screw #14 x 2" Sheet Metal Torx-T27 w/Pin ZP	4
c	FAST-T373	Anchor - Plastic #14-16 x 1⅜" Lg.	4
d	FAST-Z0016	Screw #14 x ⅝" Sheet Metal Torx-T27 w/Pin ZP	12
e	HDWT-T341	Bracket, Alcove Offset	4

Also available in Stainless Steel - HDWT-S0286 — $ 90.00

NOTE: Torx bits are not included but can be ordered separately.

Dividing Alcove Panel Kit (Aluminum Continuous) — **HDWT-A0288** — **List Price** $ 110.00

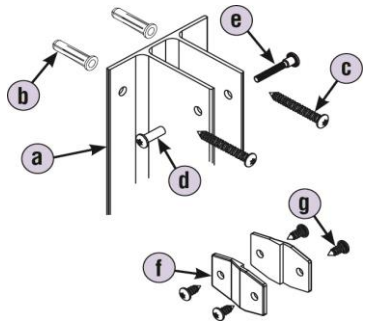

Includes:

	Part No.	Description	Qty.
a	HDWT-A186	Bracket, Continuous 1" Double-Ear	1
b	FAST-T373	Anchor - Plastic #14-16 x 1⅜" Lg.	10
c	FAST-P002	Screw #14 x 2" BTN Sheet Metal Torx-T27 w/Pin SS	10
d	FAST-P003	Screw #10-24 x ¾" BTN Barrel-Female Torx-T27 w/Pin SS	5
e	FAST-P004	Screw #10-24 x ¾" BTN Step-Male Torx-T27 SS	5
f	HDWT-T341	Bracket, Alcove Offset	4
g	FAST-Z0016	Screw #14 x ⅝" Sheet Metal Torx-T27 w/Pin ZP	8

NOTE: Torx bits are not included but can be ordered separately.

Ending Alcove Panel Kit (Zamac Stirrup) — **HDWT-Z0287** — **List Price** $ 33.00

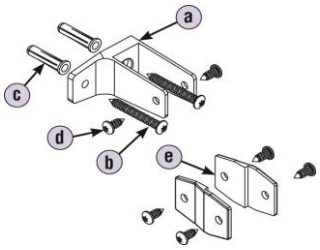

Includes:

	Part No.	Description	Qty.
a	HDWT-T332	Bracket, Single-Ear 1" x 2½"	2
b	FAST-Z002	Screw #14 x 2" Sheet Metal Torx-T27 w/Pin ZP	4
c	FAST-T373	Anchor - Plastic #14-16 x 1⅜" Lg.	4
d	FAST-Z0016	Screw #14 x ⅝" Sheet Metal Torx-T27 w/Pin ZP	12
e	HDWT-T341	Bracket, Alcove Offset	4

Also available in Stainless Steel - HDWT-S0287 — $ 90.00

NOTE: Torx bits are not included but can be ordered separately.

Additional Kits

Ending Alcove Panel Kit (Aluminum Continuous) — **HDWT-A0289** — **List Price** $ 104.00

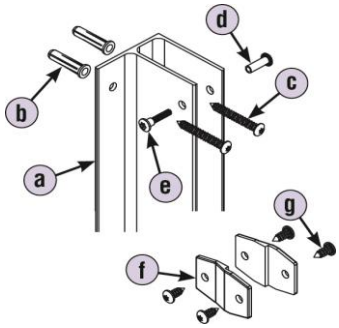

Includes:

	Part No.	Description	Qty.
a	HDWT-A183	Bracket, Continuous, 1" Single-Ear Aluminum	1
b	FAST-T373	Anchor - Plastic #14-16 x 1⅜" Lg.	10
c	FAST-P002	Screw #14 x 2" BTN Sheet Metal Torx-T27 w/Pin SS	10
d	FAST-P003	Screw #10-24 x ¾" BTN Barrel-Female Torx-T27 w/Pin SS	5
e	FAST-P004	Screw #10-24 x ¾" BTN Step-Male Torx-T27 SS	5
f	HDWT-T341	Bracket, Alcove Offset	4
g	FAST-Z0016	Screw #14 x ⅝" Sheet Metal Torx-T27 w/Pin ZP	8

NOTE: Torx bits are not included but can be ordered separately.

Dividing/Ending Alcove Panel @Wall Kit (Stainless Continuous) — **HDWT-S0477-57** — **List Price** $ 163.00

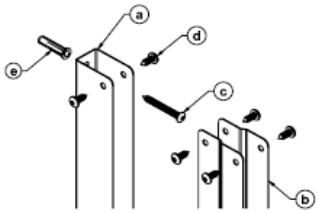

Includes:

	Part No.	Description	Qty.
a	S190-02-57	Bracket "U" Continuous 2" X 57"	1
b	HDWT-S0290-57	Bracket Continuous Alcove Offset	2
c	FAST-P002	Screw #14 X 2" BTN Sheet Metal Torx-T27 w/Pin SS	5
d	FAST-S355A	Screw 1/4-14 X 5/8" Sheet Metal Torx-T27 w/Pin SS	30
e	FAST-T373	Anchor - Plastic #14-16 X 1-3/8" Lg.	5

Also available in 68" & 71" Heights - HDWT-S0477-68/-71 — $ 257.00

Dividing/Ending Alcove Panel @Panel Kit (Stainless Continuous) — **HDWT-S0478-57** — **List Price** $ 163.00

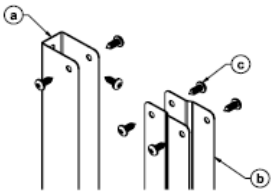

Includes:

	Part No.	Description	Qty.
a	S190-02-57	Bracket "U" Continuous 2" X 57"	1
b	HDWT-S0290-57	Bracket Continuous Alcove Offset	2
c	FAST-S355A	Screw 1/4-14 X 5/8" Sheet Metal Torx-T27 w/Pin SS	35

Also available in 68" & 71" Heights - HDWT-S0478-68/-71 — $ 257.00

Urinal Screen Bracket Kit — **HDWT-Z5US** — **List Price** $ 36.00

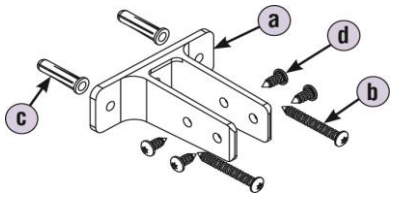

Includes:

	Part No.	Description	Qty.
a	HDWT-T335	Bracket, Double-Ear x 1" x 3½"	2
b	FAST-Z002	Screw #14 x 2" Sheet Metal Torx-T27 w/Pin ZP	4
c	FAST-T373	Anchor - Plastic #14-16 x 1⅜" Lg.	4
d	FAST-Z0016	Screw #14 x ⅝" Sheet Metal Torx-T27 w/Pin ZP	8

Also available in Stainless Steel - HDWT-S5US — $ 66.00

NOTE: Torx bits are not included but can be ordered separately.

Urinal Screen Bracket Kit (Stainless Continuous) — **HDWT-S0482-47** — **List Price** $ 106.00

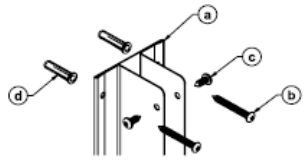

Includes:

	Part No.	Description	Qty.
a	HDWT-S186-47	Bracket "2 Ear" Continuous 1" X 47"	1
b	FAST-P002	Screw #14 X 2" BTN Sheet Metal Torx-T27 w/Pin SS	8
c	FAST-S355A	Screw 1/4-14 X 5/8" Sheet Metal Torx-T27 w/Pin SS	8
d	FAST-T373	Anchor - Plastic #14-16 X 1-3/8" Lg.	8

Also Available in 41" Height - HDWT-S0482-41 — $ 92.00

Additional Kits

Urinal Screen Bracket Kit (Aluminum Continuous)

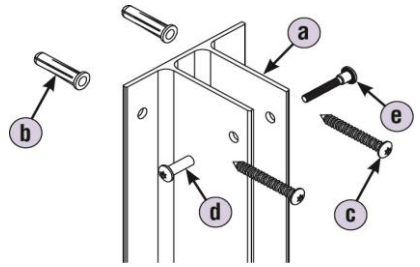

HDWT-A0057 — **List Price** $ 105.00

Includes:

	Part No.	Description	Qty.
a	HDWT-A186-42	Bracket, Continuous Double-Ear Aluminum	1
b	FAST-T373	Anchor - Plastic #14-16 x 1⅜" Lg.	10
c	FAST-P002	Screw #14 x 2" BTN Sheet Metal Torx-T27 w/Pin SS	10
d	FAST-P003	Screw #10-24 x ¾" BTN Barrel-Female Torx-T27 w/Pin SS	5
e	FAST-P004	Screw #10-24 x ¾" BTN Step-Male Torx-T27 SS	5

NOTE: Torx bits are not included but can be ordered separately.

Dividing Urinal Screen Bracket Kit (Stainless Continuous)

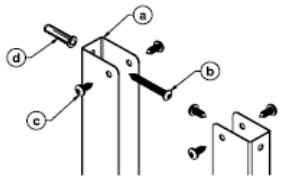

HDWT-S0475-47 — **List Price** $ 172.00

Includes:

	Part No.	Description	Qty.
a	S190-02-47	Bracket "U" Continuous 2" X 47"	2
b	FAST-P002	Screw #14 X 2" BTN Sheet Metal Torx-T27 w/Pin SS	4
c	FAST-S355A	Screw 1/4-14 X 5/8" Sheet Metal Torx-T27 w/Pin SS	20
d	FAST-T373	Anchor - Plastic #14-16 X 1-3/8" Lg.	4

Also Available in 41" Height - HDWT-S0475-41 — $ 150.00

Dividing Urinal Screen Bracket Kit (Aluminum Continuous)

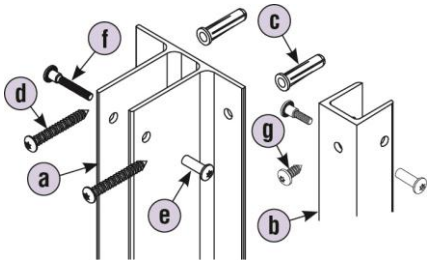

HDWT-A0142 — **List Price** $ 206.00

Includes:

	Part No.	Description	Qty.
a	HDWT-A186-42	Bracket, Continuous Double-Ear Aluminum	1
b	HDWT-A185-42	Bracket, Continuous "U" Aluminum	1
c	FAST-T373	Anchor - Plastic #14-16 x 1⅜" Lg.	10
d	FAST-P002	Screw #14 x 2" BTN Sheet Metal Torx-T27 w/Pin SS	10
e	FAST-P003	Screw #10-24 x ¾" BTN Barrel-Female Torx-T27 w/Pin SS	5
f	FAST-P004	Screw #10-24 x ¾" BTN Step-Male Torx-T27 SS	5
g	FAST-S355A	Screw ¼-14 x ⅝" Sheet Metal Torx-T27 w/Pin SS	5

NOTE: Torx bits are not included but can be ordered separately.

Urinal Screen Wing Bracket Kit

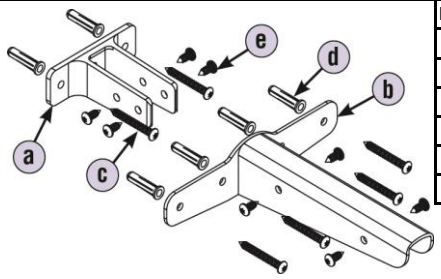

HDWT-Z6US — **List Price** $ 40.00

Includes:

	Part No.	Description	Qty.
a	HDWT-T335	Bracket, Double-Ear x 1" x 3½"	1
b	HDWT-Z270	Wing Bracket	1
c	FAST-Z002	Screw #14 x 2" Sheet Metal Torx-T27 w/Pin ZP	6
d	FAST-T373	Anchor - Plastic #14-16 x 1⅜" Lg.	6
e	FAST-Z0016	Screw #14 x ⅝" Sheet Metal Torx-T27 w/Pin ZP	8

NOTE: Torx bits are not included but can be ordered separately.

Urinal Screen Wing Bracket Kit (Stainless Continuous)

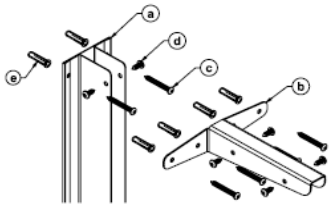

HDWT-S0486-47 — **List Price** $ 151.00

Includes:

	Part No.	Description	Qty.
a	HDWT-S186-46	Bracket "2 Ear" Continuous 1" X 46"	1
b	HDWT-S0487	"Wing" Bracket 1" X 8"	1
c	FAST-P002	Screw #14 X 2" BTN Sheet Metal Torx-T27 w/Pin SS	12
d	FAST-S355A	Screw 1/4-14 X 5/8" Sheet Metal Torx-T27 w/Pin SS	12
e	FAST-T373	Anchor - Plastic #14-16 X 1-3/8" Lg.	12

Also Available in 41" Height - HDWT-S0486-41 — $ 136.00

Additional Kits

Floor-To-Ceiling 1¾" Aluminum Post with Shoes

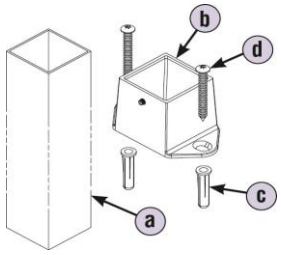

HDWT-Z0194 — List Price $ 127.00

Includes:

	Part No.	Description	Qty.
a	T462-120	Aluminum Post 120"	1
b	HDWT-T284	Shoe for 1¾" Aluminum Post	2
c	FAST-T373	Anchor - Plastic #14-16 x 1⅜" Lg.	4
d	FAST-Z002	Screw #14 x 2" Sheet Metal Torx-T27 w/Pin ZP	4

NOTE: Torx bits are not included but can be ordered separately.

Floor-Braced 1¾" Aluminum Post w/Shoes and Cap

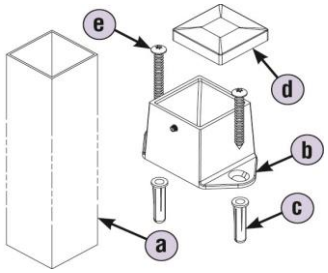

HDWT-Z0195 — List Price $ 90.00

Includes:

	Part No.	Description	Qty.
a	T462-060	Aluminum Post 60"	1
b	HDWT-T284	Shoe for 1¾" Aluminum Post	1
c	FAST-T373	Anchor - Plastic #14-16 x 1⅜" Lg.	2
d	HDWT-T181	Cap for 1¾" Aluminum Post	1
e	FAST-Z002	Screw #14 x 2" Sheet Metal Torx-T27 w/Pin ZP	2

NOTE: Torx bits are not included but can be ordered separately.

Wall Front Post 1¼" Sq. x 58"

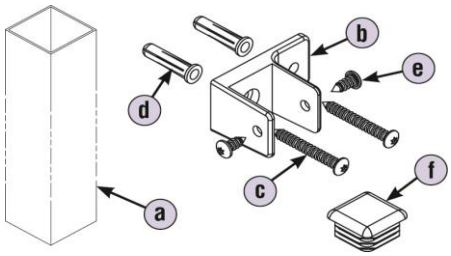

HDWT-Z0388-XXXX — List Price $ 66.00

Includes:

	Part No.	Description	Qty.
a	T463-058-XXXX	Post 1¼" Sq. x 58"	1
b	HDWT-Z0037	Bracket, Mini-Ear 1¼" x 1¾"	3
c	FAST-Z002	Screw #14 x 2" Sheet Metal Torx-T27 w/Pin ZP	6
d	FAST-T373	Anchor - Plastic #14-16 x 1⅜" Lg.	6
e	FAST-Z0016	Screw #14 x ⅝" Sheet Metal Torx-T27 w/Pin ZP	6
f	HDWT-P0386	Cap Plug 1¼" Sq.	2

NOTE: Torx bits are not included but can be ordered separately.

Wall Front Post Kit ¼" Sq. x 82"

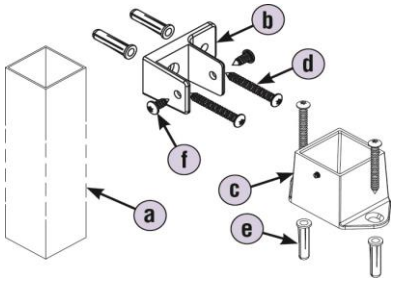

HDWT-Z0396-XXXX — List Price $ 97.00

Includes:

	Part No.	Description	Qty.
a	T463-082-XXXX	Post 1¼" Sq. x 82"	1
b	HDWT-Z0037	Bracket, Mini-Ear 1¼" x 1¾"	3
c	HDWT-Z0394	Post Shoe 1¼" Sq.	1
d	FAST-Z002	Screw #14 x 2" Sheet Metal Torx-T27 w/Pin ZP	8
e	FAST-T373	Anchor - Plastic #14-16 x 1⅜" Lg.	8
f	FAST-Z0016	Screw #14 x ⅝" Sheet Metal Torx-T27 w/Pin ZP	6

NOTE: Torx bits are not included but can be ordered separately.

Additional Kits

Wall Front Post 1¼" Sq. x 58" (Stn. Steel)	HDWT-Z0388-0177			List Price
	Includes:			$ 66.00
	Part No.	Description	Qty.	
a	T463-058-0177	Post 1¼" Sq. x 58" Dusk Gray	1	
b	HDWT-Z0037	Bracket, Mini-Ear 1¼" x 1¾"	3	
c	FAST-Z002	Screw #14 x 2" Sheet Metal Torx-T27 w/Pin ZP	6	
d	FAST-T373	Anchor - Plastic #14-16 x 1⅜" Lg.	6	
e	FAST-Z0016	Screw #14 x ⅝" Sheet Metal Torx-T27 w/Pin ZP	6	
f	HDWT-P0386	Cap Plug 1¼" Sq.	2	

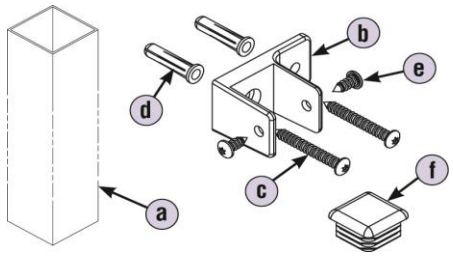

NOTE: Torx bits are not included but can be ordered separately.

Wall Front Post Kit 1¼" Sq. x 82" (Stn. Steel)	HDWT-Z0396-0177			List Price
	Includes:			$ 97.00
	Part No.	Description	Qty.	
a	T463-082-0177	Post 1¼" Sq. x 82" Dusk Gray	1	
b	HDWT-Z0037	Bracket, Mini-Ear 1¼" x 1¾"	3	
c	HDWT-Z0394	Post Shoe 1¼" Sq.	1	
d	FAST-Z002	Screw #14 x 2" Sheet Metal Torx-T27 w/Pin ZP	8	
e	FAST-T373	Anchor - Plastic #14-16 x 1⅜" Lg.	8	
f	FAST-Z0016	Screw #14 x ⅝" Sheet Metal Torx-T27 w/Pin ZP	6	

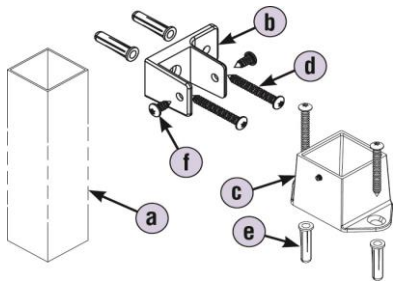

NOTE: Torx bits are not included but can be ordered separately.

No-Site Strips, Latch and Hinge Sides (NST1)	HDWT-S0421			List Price
	Includes:			$ 66.00
	Part No.	Description	Qty.	
a	HDWT-S0419	No-Site Strip, Latch Side 1-3/4"W x 26-1/2"H	2	
b	HDWT-S0420	No-Site Strip, Hinge Side 1-3/8"W x 50"H	1	
c	FAST-S355A	Screw ¼-14 x ⅝" Sheet Metal Torx-T27 w/Pin SS	12	
Also available in 69" & 72" Heights - HDWT-S0421-69/72				$ 79.00

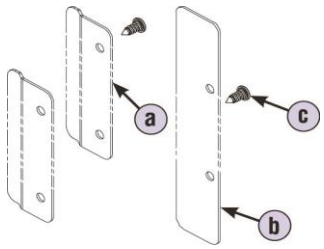

NOTE: Torx bits are not included but can be ordered separately.

No-Site Strips, Latch Side (NST2)	HDWT-S0422			List Price
	Includes:			$ 41.00
	Part No.	Description	Qty.	
a	HDWT-S0419	No-Site Strip, Latch Side 1-3/4"W x 26-1/2"H	2	
b	FAST-S355A	Screw ¼-14 x ⅝" Sheet Metal Torx-T27 w/Pin SS	8	
Also available in 69" & 72" Heights - HDWT-S0422-69/72				$ 50.00

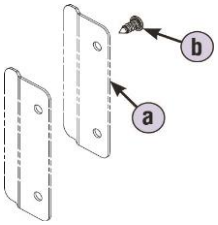

NOTE: Torx bits are not included but can be ordered separately.

Additional Kits

Top Hinge Kit — **HDWT-T100** — **List Price**

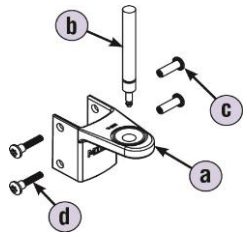

Includes: $ 23.00

	Part No.	Description	Qty.
a	HDWT-T101	Top Hinge with Bushing	1
b	HDWT-T103	Pin, Top Hinge	1
c	FAST-Z003	Screw #10-24 x ¾" Barrel-Female Torx-T27 w/Pin ZP	2
d	FAST-Z004A	Screw #10-24 x 1" Step-Male Torx-T27 w/Pin ZP	2

Also available in Stainless Steel - HDWT-S100 — $ 32.00

NOTE: Torx bits are not included but can be ordered separately.

Bottom Hinge Kit — **HDWT-T110** — **List Price**

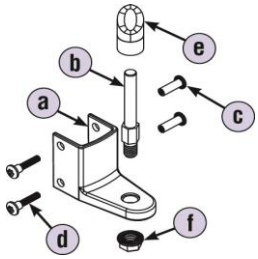

Includes: $ 23.00

	Part No.	Description	Qty.
a	HDWT-T112	Bottom Hinge	1
b	HDWT-T113	Pin, Bottom Hinge	1
c	FAST-Z003	Screw #10-24 x ¾" Barrel-Female Torx-T27 w/Pin ZP	2
d	FAST-Z004A	Screw #10-24 x 1" Step-Male Torx-T27 w/Pin ZP	2
e	HDWT-T211	Cam, Bottom Hinge	1
f	HDWT-T118	⅜"-16 Locknut, Bottom Hinge	1

Also available in Stainless Steel - HDWT-S110 — $ 32.00

NOTE: Torx bits are not included but can be ordered separately.

Flat Top Hinge Kit — **HDWT-S0185** — **List Price**

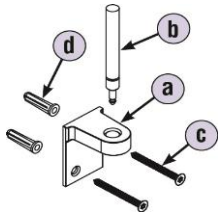

Includes: $ 50.00

	Part No.	Description	Qty.
a	HDWT-S0149	Top Hinge Flat with Bushing SS	1
b	HDWT-T103	Pin, Top Hinge	1
c	FAST-S0023	Screw #10 x 2" FL Sheet Metal Torx-T25 w/Pin SS	2
d	FAST-T381	Anchor - Plastic #10-12 x 1" Lg.	2

NOTE: Torx bits are not included but can be ordered separately.

Flat Bottom Hinge Kit — **HDWT-S0186** — **List Price**

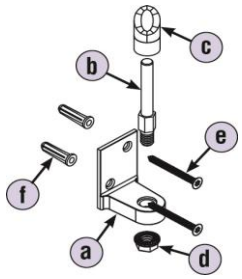

Includes: $ 50.00

	Part No.	Description	Qty.
a	HDWT-S0150	Bottom Hinge Flat SS	1
b	HDWT-T113	Pin, Bottom Hinge	1
c	HDWT-T211	Cam, Bottom Hinge	1
d	HDWT-T118	⅜"-16 Locknut, Bottom Hinge	1
e	FAST-S0023	Screw #10 x 2" FL Sheet Metal Torx-T25 w/Pin SS	2
f	FAST-T381	Anchor - Plastic #10-12 x 1" Lg.	2

NOTE: Torx bits are not included but can be ordered separately.

Door Latch — **HDWT-T290** — **List Price**

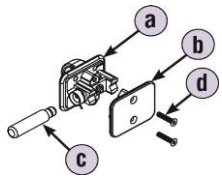

Includes: $ 13.00

	Part No.	Description	Qty.
a	HDWT-T291	Hardware Kit - Latch Assembly	1
b	HDWT-T299	Front Plate (chrome-plated)	1
c	HDWT-T301	Latch Bolt	1
d	FAST-T300	Screw 5-40 x ⅝" Flat Head Sheet Metal Torx-T10 ZP	2

Also available in Stainless Steel - HDWT-S290 — $ 27.00

NOTE: Torx bits are not included but can be ordered separately.

Additional Kits

Surface-Mounted Door Latch — **HDWT-Z0189** — **List Price**

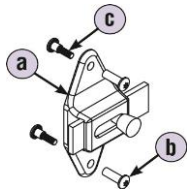

Includes: $ 26.00

	Part No.	Description	Qty.
a	HDWT-Z0124	Latch, Slide Surface-Mount ZP	1
b	FAST-Z003	Screw #10-24 x ¾" Barrel-Female Torx-T27 w/Pin ZP	2
c	FAST-Z004	Screw #10-24 x ¾" Step-Male Torx-T27 ZP	2

Also available in Stainless Steel - HDWT-S0189 $ 42.00

NOTE: Torx bits are not included but can be ordered separately.

Door Pull Kit — **HDWT-Z0138** — **List Price**

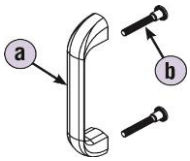

Includes: $ 22.00

	Part No.	Description	Qty.
a	HDWT-Z282	Door Pull ZP	1
b	FAST-Z0003	Screw #10-24 x 1⅜" Step-Male Torx-T27 w/Pin ZP	2

Also available in Stainless Steel - HDWT-S0138 $ 37.00

NOTE: Torx bits are not included but can be ordered separately.

Door Pull with Countersink Kit — **HDW0-Z0168** — **List Price**

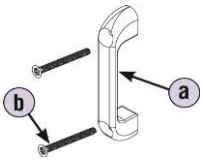

Includes: $ 26.00

	Part No.	Description	Qty.
a	HDW0-Z0167	Door Pull with Countersink ZP	1
b	FAST-Z0027	Screw #10-24 x 2" Flat Machine Torx ZP	2

Also available in Stainless Steel - HDW0-S0168 $ 30.00

NOTE: Torx bits are not included but can be ordered separately.

Coat Hook Inswing Kit — **HDWT-Z0011** — **List Price**

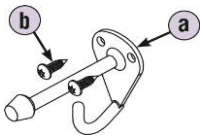

Includes: $ 22.00

	Part No.	Description	Qty.
a	HDWT-Z285	Coat Hook with Bumper ZP	1
b	FAST-Z0019	Screw #10 x ⅝" Sheet Metal Torx-T27 w/Pin ZP	2

Also available in Stainless Steel - HDWT-S0011 $ 23.00

NOTE: Torx bits are not included but can be ordered separately.

Coat Hook Outswing Kit — **HDWT-S0013** — **List Price**

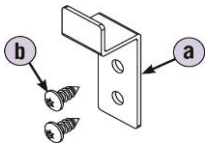

Includes: $ 22.00

	Part No.	Description	Qty.
a	HDWT-S275	Coat Hook, Outswing	1
b	FAST-S355A	Screw ¼-14 x ⅝" Sheet Metal Torx-T27 w/Pin SS	2

NOTE: Torx bits are not included but can be ordered separately.

Wall Bumper Kit — **HDWT-Z283** — **List Price**

Includes: $ 16.00

	Part No.	Description	Qty.
a	HDWT-Z177	Wall Bumper ZP	1
b	FAST-Z0019	Screw #10 x ⅝" Sheet Metal Torx-T27 w/Pin ZP	2

Also available in Stainless Steel - HDWT-S283 $ 29.00

NOTE: Torx bits are not included but can be ordered separately.

Additional Kits

Flat Strike/Keeper Inswing/Outswing (for concealed-latch doors only)

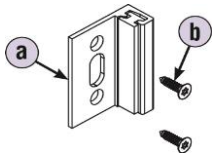

HDWT-Z319				List Price
Includes:				$ 50.00
	Part No.	Description	Qty.	
a	HDWT-Z0022	Flat Strike/Keeper Inswing & Outswing	1	
b	FAST-Z0006	Screw #10 x ¾" FL Sheet Metal Torx-T25 w/Pin ZP	2	
Also available in Stainless Steel - HDWT-S319				$ 52.00

NOTE: Torx bits are not included but can be ordered separately.

Wrap Around Strike/Keeper Inswing/Outswing (for concealed-latch doors only)

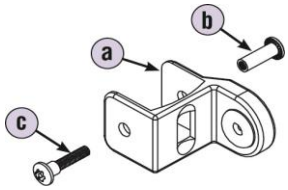

HDWT-T318				List Price
Includes:				$ 21.00
	Part No.	Description	Qty.	
a	HDWT-Z0119	Wrap Around Strike/Keeper	1	
b	FAST-Z003	Screw #10-24 x ¾" Barrel-Female Torx-T27 w/Pin ZP	1	
c	FAST-Z004A	Screw #10-24 x 1" Step-Male Torx-T27 w/Pin ZP	1	
Also available in Stainless Steel - HDWT-S318				$ 46.00

NOTE: Torx bits are not included but can be ordered separately.

Wrap Around Strike/Keeper Inswing (for surface-latch doors only)

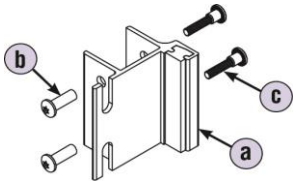

HDWT-Z0190				List Price
Includes:				$ 28.00
	Part No.	Description	Qty.	
a	HDWT-Z0125	Strike/Keeper Inswing ZP	1	
b	FAST-Z003	Screw #10-24 x ¾" Barrel-Female Torx-T27 w/Pin ZP	2	
c	FAST-Z004A	Screw #10-24 x 1" Step-Male Torx-T27 w/Pin ZP	2	
Also available in Stainless Steel - HDWT-S0190				$ 40.00

NOTE: Torx bits are not included but can be ordered separately.

Flat Strike/Keeper Inswing (for surface-latch doors only)

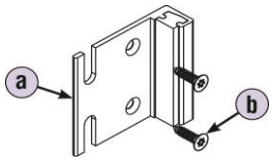

HDWT-Z0191				List Price
Includes:				$ 27.00
	Part No.	Description	Qty.	
a	HDWT-Z0127	Flat Strike/Keeper Inswing ZP	1	
b	FAST-Z0006	Screw #10 x ¾" FL Sheet Metal Torx-T25 w/Pin ZP	2	
Also available in Stainless Steel - HDWT-S0191				$ 36.00

NOTE: Torx bits are not included but can be ordered separately.

Wrap Around Strike/Keeper Outswing (for surface-latch doors only)

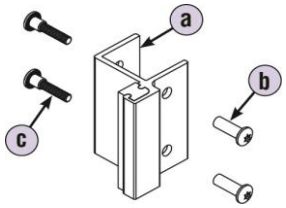

HDWT-Z0192				List Price
Includes:				$ 25.00
	Part No.	Description	Qty.	
a	HDWT-Z0126	Strike/Keeper Outswing ZP	1	
b	FAST-Z003	Screw #10-24 x ¾" Barrel-Female Torx-T27 w/Pin ZP	2	
c	FAST-Z004A	Screw #10-24 x 1" Step-Male Torx-T27 w/Pin ZP	2	
Also available in Stainless Steel - HDWT-S0192				$ 33.00

NOTE: Torx bits are not included but can be ordered separately.

Flat Strike/Keeper Outswing (for surface-latch doors only)

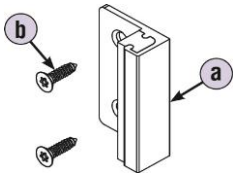

HDWT-Z0193				List Price
Includes:				$ 21.00
	Part No.	Description	Qty.	
a	HDWT-Z0128	Flat Strike/Keeper Inswing ZP	1	
b	FAST-Z0006	Screw #10 x ¾" FL Sheet Metal Torx-T25 w/Pin ZP	2	
Also available in Stainless Steel - HDWT-S0193				$ 32.00

NOTE: Torx bits are not included but can be ordered separately.

Additional Kits

Continuous Stainless Steel Piano Hinge (spring-loaded) — **List Price**

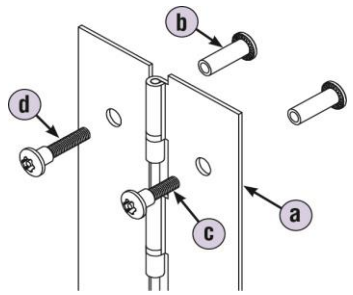

HDWT-S0136 (RHI/LHO)				$ 152.00
Includes:				
	Part No.	**Description**	**Qty.**	
a	HDWT-S0208	Piano Hinge, Continuous Stainless Steel	1	
b	FAST-P003	Screw #10-24 x ¾" BTN Barrel-Female Torx-T27 w/Pin SS	12	
c	FAST-P004	Screw #10-24 x ¾" BTN Step-Male Torx-T27 SS	6	
d	FAST-P004A	Screw #10-24 x 1" Shoulder Torx-T27 SS	6	
Also available in 68" & 71" Heights - HDWT-S0136-68/-71				$ 284.00
HDWT-S0137 (LHI/RHO)				$ 152.00
Includes:				
	Part No.	**Description**	**Qty.**	
a	HDWT-S0209	Piano Hinge, Continuous Stainless Steel	1	
b	FAST-P003	Screw #10-24 x ¾" BTN Barrel-Female Torx-T27 w/Pin SS	12	
c	FAST-P004	Screw #10-24 x ¾" BTN Step-Male Torx-T27 SS	6	
d	FAST-P004A	Screw #10-24 x 1" Shoulder Torx-T27 SS	6	
Also available in 68" & 71" Heights - HDWT-S0137-68/-71				$ 284.00

NOTE: Torx bits are not included but can be ordered separately.

Continuous Stainless Steel Piano Hinge at Wall (spring-loaded) — **List Price**

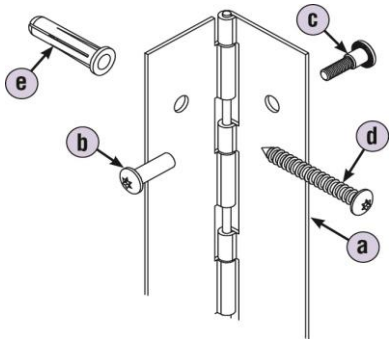

HDWT-S0197 (RHI/LHO)				$ 150.00
Includes:				
	Part No.	**Description**	**Qty.**	
a	HDWT-S0208	Piano Hinge, Continuous Stainless Steel	1	
b	FAST-P003	Screw #10-24 x ¾" BTN Barrel-Female Torx-T27 w/Pin SS	6	
c	FAST-P004	Screw #10-24 x ¾" BTN Step-Male Torx-T27 SS	6	
d	FAST-P002	Screw #14 x 2" BTN Sheet Metal Torx-T27 w/Pin SS	6	
e	FAST-T373	Anchor - Plastic #14-16 x 1⅜" Lg.	6	
HDWT-S0198 (LHI/RHO)				$ 150.00
Includes:				
	Part No.	**Description**	**Qty.**	
a	HDWT-S0209	Piano Hinge, Continuous Stainless Steel	1	
b	FAST-P003	Screw #10-24 x ¾" BTN Barrel-Female Torx-T27 w/Pin SS	6	
c	FAST-P004	Screw #10-24 x ¾" BTN Step-Male Torx-T27 SS	6	
d	FAST-P002	Screw #14 x 2" BTN Sheet Metal Torx-T27 w/Pin SS	6	
e	FAST-T373	Anchor - Plastic #14-16 x 1⅜" Lg.	6	

NOTE: Torx bits are not included but can be ordered separately.

SS Cam Piano Hinge Zero° Open — **HDWT-S0473** — **List Price**

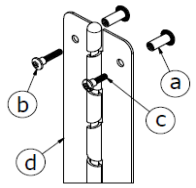

Includes:				$ 232.00
	Part No.	**Description**	**Qty.**	
a	FAST-P003	Screw #10-24 x 3/4" BTN Barrel-Female Torx-T27 w/Pin SS	14	
b	FAST-P004A	Screw #10-24 x 1" Shoulder Torx-T27 SS	7	
c	FAST-P004	Screw #10-24 x 3/4" BTN Step-Male Torx-T27	7	
d	HDWT-S0403-57	Cam Piano Hinge, Continuous Stainless Steel 57"	1	
Also available in 68" & 71" Heights - HDWT-S0473-68/-71				$ 372.00

SS Cam Piano Hinge 20° Open — **HDWT-S0474** — **List Price**

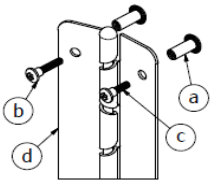

Includes:				$ 232.00
	Part No.	**Description**	**Qty.**	
a	FAST-P003	Screw #10-24 x 3/4" BTN Barrel-Female Torx-T27 w/Pin SS	14	
b	FAST-P004A	Screw #10-24 x 1" Shoulder Torx-T27 SS	7	
c	FAST-P004	Screw #10-24 x 3/4" BTN Step-Male Torx-T27	7	
d	HDWT-S0404-57	Cam Piano Hinge, Continuous Stainless Steel 57"	1	
Also available in 71" Height - HDWT-S0474-71				$ 372.00

NOTE: Torx bits are not included but can be ordered separately.

Additional Kits

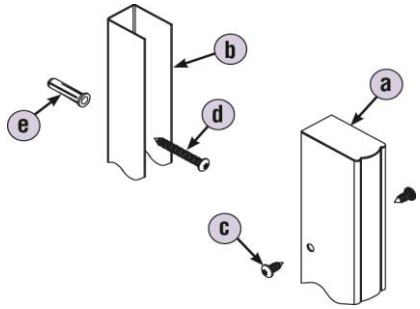

Telescoping Pilaster Kit				List Price
HDWT-S1971 (adjustable from 1½" to 1⅞")				
Includes:				$ 193.00
	Part No.	**Description**	**Qty.**	
a	S197-01A	Telescoping Channel	1	
b	S197-01B	Mounting Channel	1	
c	FAST-Z0016	Screw #14 x ⅝" Sheet Metal Torx-T27 w/Pin ZP	8	
d	FAST-Z002	Screw #14 x 2" Sheet Metal Torx-T27 w/Pin ZP	4	
e	FAST-T373	Anchor - Plastic #14-16 x 1⅜" Lg.	4	
Also available in Textured Stainless Steel - HDWT-S1971-5WL				$ 225.00
HDWT-S1972 (adjustable from 1⅞" to 2½")				
Includes:				$ 228.00
	Part No.	**Description**	**Qty.**	
a	S197-02A	Telescoping Channel	1	
b	S197-02B	Mounting Channel	1	
c	FAST-Z0016	Screw #14 x ⅝" Sheet Metal Torx-T27 w/Pin ZP	8	
d	FAST-Z002	Screw #14 x 2" Sheet Metal Torx-T27 w/Pin ZP	4	
e	FAST-T373	Anchor - Plastic #14-16 x 1⅜" Lg.	4	
Also available in Textured Stainless Steel - HDWT-S1972-5WL				$ 252.00
HDWT-S1973 (adjustable from 2½" to 3½")				
Includes:				$ 237.00
	Part No.	**Description**	**Qty.**	
a	S197-03A	Telescoping Channel	1	
b	S197-03B	Mounting Channel	1	
c	FAST-Z0016	Screw #14 x ⅝" Sheet Metal Torx-T27 w/Pin ZP	8	
d	FAST-Z002	Screw #14 x 2" Sheet Metal Torx-T27 w/Pin ZP	4	
e	FAST-T373	Anchor - Plastic #14-16 x 1⅜" Lg.	4	
Also available in Textured Stainless Steel - HDWT-S1973-5WL				$ 288.00

NOTE: Torx bits are not included but can be ordered separately.

Additional Kits

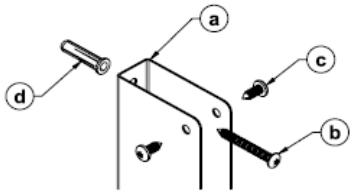

Pilaster Channel Kit				List Price
HDWT-S0495				
Includes:				$ 97.00
	Part No.	**Description**	**Qty.**	
a	S192-02-57	Bracket "U" Continuous 2" X 57"	1	
b	FAST-P002	Screw #14 X 2" BTN Sheet Metal Torx-T27 w/Pin SS	5	
c	FAST-S355A	Screw 1/4-14 X 5/8" Sheet Metal Torx-T27 w/Pin SS	10	
d	FAST-T373	Anchor - Plastic #14-16 X 1-3/8" Lg.	5	
Also Available in 68"H Stainless Steel - HDWT-S0468				$ 114.00
Also Available in 71"H Stainless Steel - HDWT-S0496				$ 114.00
HDWT-S0497				
Includes:				$ 109.00
	Part No.	**Description**	**Qty.**	
a	S192-03-57	Bracket "U" Continuous 3" X 57"	1	
b	FAST-P002	Screw #14 X 2" BTN Sheet Metal Torx-T27 w/Pin SS	5	
c	FAST-S355A	Screw 1/4-14 X 5/8" Sheet Metal Torx-T27 w/Pin SS	10	
d	FAST-T373	Anchor - Plastic #14-16 X 1-3/8" Lg.	5	
Also Available in 68"H Stainless Steel - HDWT-S0467				$ 127.00
Also Available in 71"H Stainless Steel - HDWT-S0498				$ 127.00

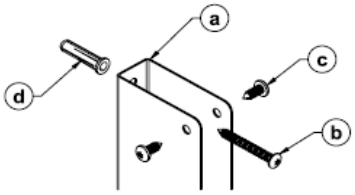

Panel Channel Kit				List Price
HDWT-S0489				
Includes:				$ 92.00
	Part No.	**Description**	**Qty.**	
a	S190-02-57	Bracket "U" Continuous 2" X 57"	1	
b	FAST-P002	Screw #14 X 2" BTN Sheet Metal Torx-T27 w/Pin SS	5	
c	FAST-S355A	Screw 1/4-14 X 5/8" Sheet Metal Torx-T27 w/Pin SS	10	
d	FAST-T373	Anchorr - Plastic #14-16 X 1-3/8" Lg.	5	
Also Available in 68"H Stainless Steel - HDWT-S0470				$ 110.00
Also Available in 71"H Stainless Steel - HDWT-S0490				$ 110.00
HDWT-S0491				
Includes:				$ 108.00
	Part No.	**Description**	**Qty.**	
a	S190-03-57	Bracket "U" Continuous 3" X 57"	1	
b	FAST-P002	Screw #14 X 2" BTN Sheet Metal Torx-T27 w/Pin SS	5	
c	FAST-S355A	Screw 1/4-14 X 5/8" Sheet Metal Torx-T27 w/Pin SS	10	
d	FAST-T373	Anchor - Plastic #14-16 X 1-3/8" Lg.	5	
Also Available in 68"H Stainless Steel - HDWT-S0469				$ 126.00
Also Available in 71"H Stainless Steel - HDWT-S0492				$ 126.00

Additional Kits

Torx Bits

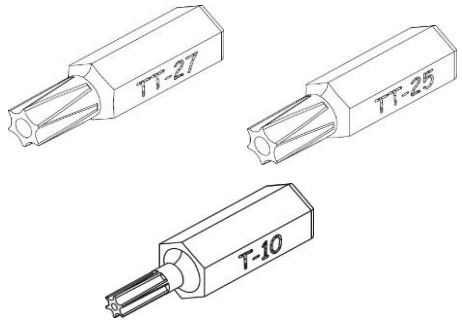

	Part No.	Description	Qty.	List Price
	HW101031	Torx Bit T27	1	$ 6.00
	HW101030	Torx Bit T25	1	$ 6.00
	HW0037	Torx Bit T10	1	$ 6.00

Curtain Hook for Headrail

HDWP-COMHK

List Price
$ 2.00

Cam & Hinge Pin Kit

HDWT-Z0079

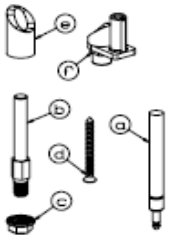

Includes:

	Part No.	Description	Qty.
a	HDWT-T103	Pin, Top Hinge	1
b	HDWT-T113	Pin, Bottom Hinge	1
c	HDWT-T118	3/8-16 Lock Nut, Bottom Hinge	1
d	FAST-T352	Screw #10X2 FL Sheet Metal Phillips Dr ZP	1
e	HDWT-T211	Cam, Bottom Hinge	1
f	HDWT-P117	Cam, Door	1

List Price: $ 17.00

Continuous "H" Bracket

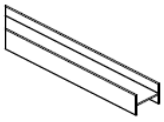

Part No.	Description	Qty.	List Price
HDWT-A0545-057	Bracket H Continuous 1/2 X 80" Alum	1	$ 29.00
HDWT-A0545-068	Bracket H Continuous 1/2 X 80" Alum	1	$ 33.00
HDWT-A0545-080	Bracket H Continuous 1/2 X 80" Alum	1	$ 38.00