TEL: 800.BRADLEY
FAX: 262.251.5817
bradleycorp.com

Phenolic Partitions Service Parts List Price Book
0322MSP

Effective Date March 15, 2022

Table of Contents

Layouts with Reference Numbers
Series 400 (Floor-Mount with Overhead Brace) and 500 (Floor-Braced) 2
Series 600 (Ceiling-Hung) and 700 (Floor-to-Ceiling) 3
Headrail Part Numbers and Kits
❶ Headrail 4
❷ Headrail Open-End Kit 4
❸ Headrail Between-the-Wall Kit 4
Shoes and Sleeves
❹ Shoe/Sleeve Kits 5-6
Inswing and Outswing Door Kits
❺ Inswing Door Kits 7-10
❻ Outswing Door Kits 11-13
Pilaster and Panel Kits
❼ Pilaster at Wall "F" Kits 14
Pilaster at Panel "F" Kits 14
Pilaster at Pilaster "F" Kits 14
❽ Dividing/Ending Panel Kits 15
Additional Kits
Alcove Kit 16-17
Urinal Screen Bracket Kit 17
No-Site™ Specific 18-19
Posts, No-Site Strips 20-21
Hinge and Latch Kits 21
Coat Hooks, Door Pulls and Wall Bumpers 22
Strike/Keeper Kits 22-23
Continuous Stainless Steel Piano Hinge 23
Pilaster Channel/Panel Channel Kits 23-24
Continuous "H" Bracket 24

Note: All Parts marked with "* " are for the original phenolic design discontinued in July 2021. These parts are not compatible with the No-Site™ design. Please contact Bradley Customer Service if you need assistance.

Series 400 and Series 500 Layouts

Series 400

Floor-Mounted with Overhead Brace

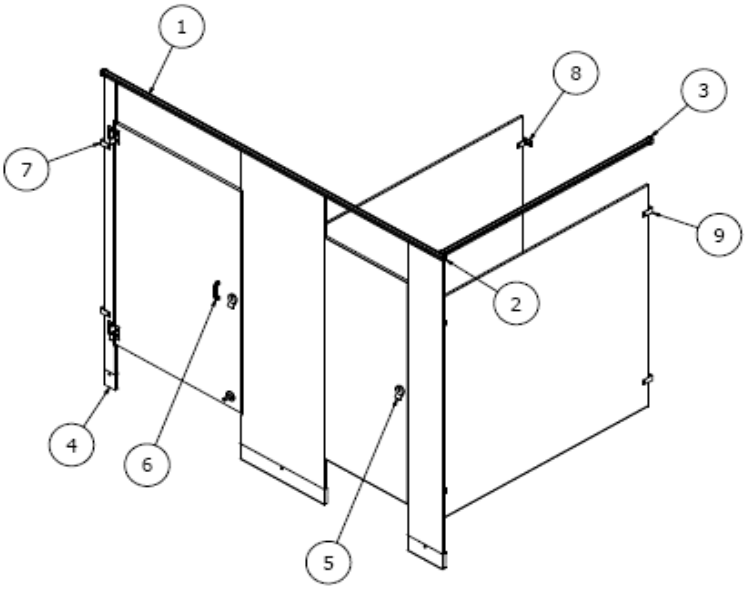

Series 500

Floor-Braced

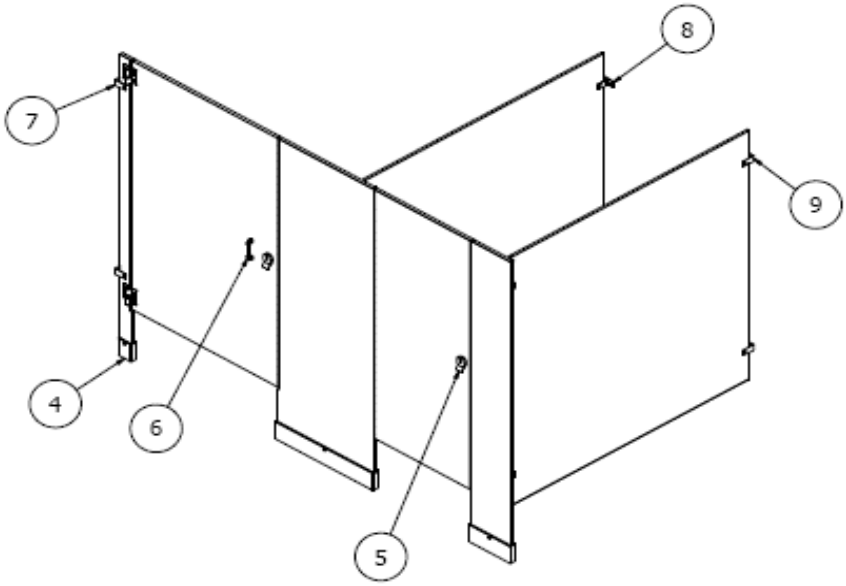

Series 600 and Series 700 Layouts

Series 600
Ceiling-Hung

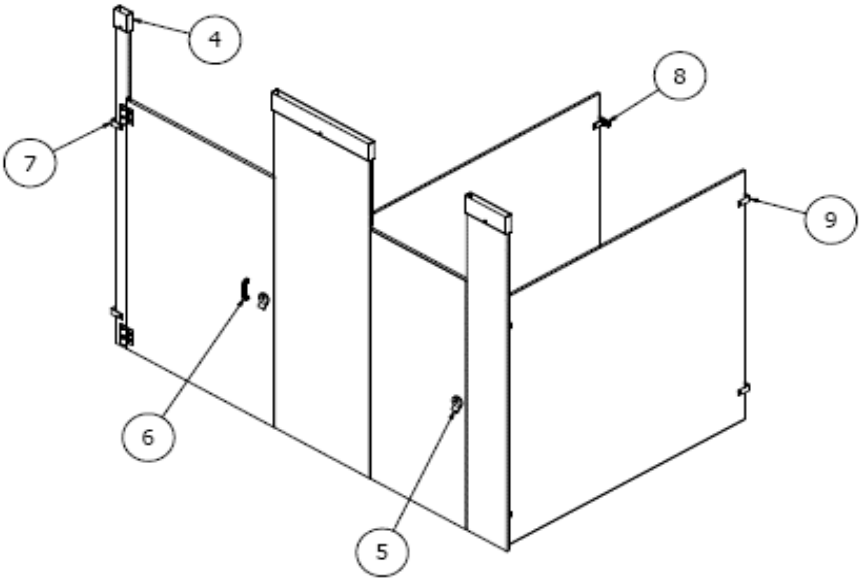

Series 700
Floor-to-Ceiling

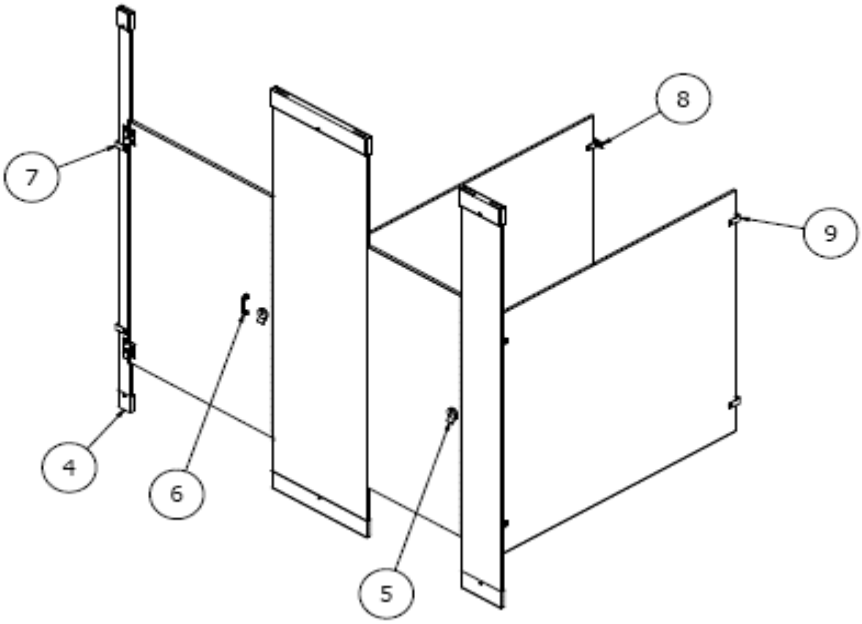

Effective Date March 15, 2022

Headrail and Headrail Kits

❶ Headrail only (mounting kits sold separately)

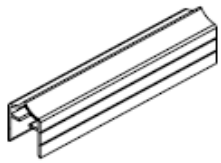

Part No.	Description	Qty.	List Price
HDWC-A0458-037	Actual Size 37"	1	$ 23.00
HDWC-A0458-059	Actual Size 59"	1	$ 32.00
HDWC-A0458-062	Actual Size 62"	1	$ 36.00
HDWC-A0458-073	Actual Size 73"	1	$ 45.00
HDWC-A0458-084	Actual Size 84"	1	$ 51.00
HDWC-A0458-120	Actual Size 120"	1	$ 77.00

❷ Headrail Open End Kit

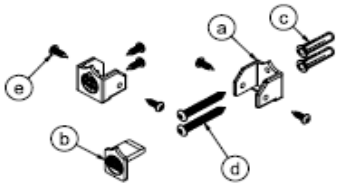

HDWC-A0461-OE — List Price: $ 27.00

Includes:

	Part No.	Description	Qty.
a	HDWC-P0459	Headrail Bracket 3/4"	3
b	HDWC-P0460	Headrail End Cap 3/4"	1
c	FAST-T373	Plastic Anchor #14-16 x 3/8"	4
d	FAST-P002	Screw #14 x 2" BTN	4
e	FAST-S0019	Screw #10 x 5/8" BTN	14

NOTE: Torx bits are not included but can be ordered separately.

❸ Headrail Between-the-Wall Kit

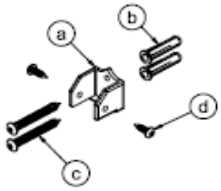

HDWC-A0461-BW — List Price: $ 16.00

Includes:

	Part No.	Description	Qty.
a	HDWC-P0459	Headrail Bracket 3/4"	2
b	FAST-T373	Plastic Anchor #14-16 x 3/8"	4
c	FAST-P002	Screw #14 x 2" BTN	4
d	FAST-S0019	Screw #10 x 5/8" BTN	12

NOTE: Torx bits are not included but can be ordered separately.

Shoe Kits

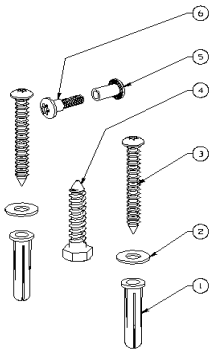

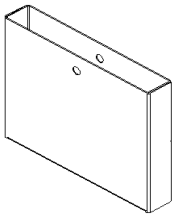

❹ Pilaster FMOB Shoe Kit (Stainless Steel)	Part No.	Description	Qty.	List Price
	HDWC-S0451-03	Actual Size 3"	1	$ 48.00
	HDWC-S0451-04	Actual Size 4"	1	$ 49.00
	HDWC-S0451-05	Actual Size 5"	1	$ 50.00
	HDWC-S0451-06	Actual Size 6"	1	$ 50.00
	HDWC-S0451-07	Actual Size 7"	1	$ 51.00
	HDWC-S0451-08	Actual Size 8"	1	$ 51.00
	HDWC-S0451-10	Actual Size 10"	1	$ 52.00
	HDWC-S0451-12	Actual Size 12"	1	$ 53.00
	HDWC-S0451-14	Actual Size 14"	1	$ 56.00
	HDWC-S0451-16	Actual Size 16"	1	$ 64.00
	HDWC-S0451-18	Actual Size 18"	1	$ 64.00
	HDWC-S0451-22	Actual Size 22"	1	$ 71.00
	HDWC-S0451-24	Actual Size 24"	1	$ 71.00

Includes Hardware:

	Part No.	Description	Qty.
	HDWC-S0443-XX	Pilaster Shoe (XX equals the shoe size)	
1	FAST-T373	Plastic Anchor #14-16 x 3/8"	2
2	P10-449	Washer.281x .625x .045 Flat 18-8 SS	2
3	FAST-P002	Screw 14 x 2 BTN SM Torx-T27 w/Pin 18-8 SS	2
4	FAST-S008	Screw 5/16 x 1-1/2 Hex Lag SS	1
5	FAST-S0017	Screw 10-24 x 1/2" BTN Step-Female Torx-T27 w/Pin 18-8 SS	1
6	FAST-P004	Screw 10-24 x ¾" BTN Step-Male Torx-T27 w/Pin 18-8 SS	1

NOTE: Torx bits are not included but can be ordered separately.

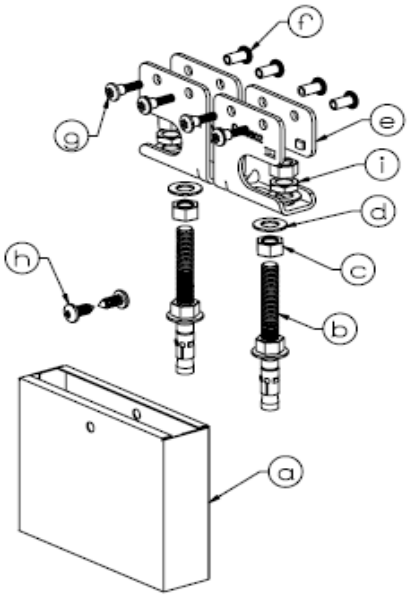

❹ Pilaster FB Shoe Kit (Stainless Steel)	Part No.	Description	Qty.	List Price
	HDWC-S0452-03	Actual Size 3"	1	$ 62.00
	HDWC-S0452-04	Actual Size 4"	1	$ 63.00
	HDWC-S0452-05	Actual Size 5"	1	$ 64.00
	HDWC-S0452-06	Actual Size 6"	1	$ 64.00
	HDWC-S0452-07	Actual Size 7"	1	$ 65.00
	HDWC-S0452-08	Actual Size 8"	1	$ 65.00
	HDWC-S0452-10	Actual Size 10"	1	$ 66.00
	HDWC-S0452-12	Actual Size 12"	1	$ 67.00
	HDWC-S0452-14	Actual Size 14"	1	$ 68.00
	HDWC-S0452-16	Actual Size 16"	1	$ 76.00
	HDWC-S0452-18	Actual Size 18"	1	$ 76.00
	HDWC-S0452-22	Actual Size 22"	1	$ 82.00
	HDWC-S0452-24	Actual Size 24"	1	$ 82.00

Includes Hardware:

	Part No.	Description	Qty.
a	HDWC-S0446-XX	Pilaster Shoe (XX equals the shoe size)	1
b	FAST-S0040	Wedge Anchor ⅜"-16 x 3-¾" SS	2
c	FAST-S0041	Nut 3/8"-16 Hex SS	4
d	FAST-S0042	Washer .406x.750x.063 Flat SS	4
e	HDWC-S0502	Leveling Bracket FB/CH	2
f	FAST-S0017	Screw 10-24 x 1/2" BTN Step Barrel-Female Torx w/Pin 18-8 SS	4
g	FAST-P004	Screw 10-24 x ¾" BTN Step-Male Torx-T27 w/Pin 18-8 SS	4
h	FAST-S355A	Screw 1/4-14 x 5/8" BTN T/S Torx-T27 w/Pin 410SS NKLP	2
i	FAST-S0044	Spacer Nut 18-8 SS	2

NOTE: Torx bits are not included but can be ordered separately.

Shoe Kits

❹ Pilaster CH Shoe Kit (Stainless Steel)

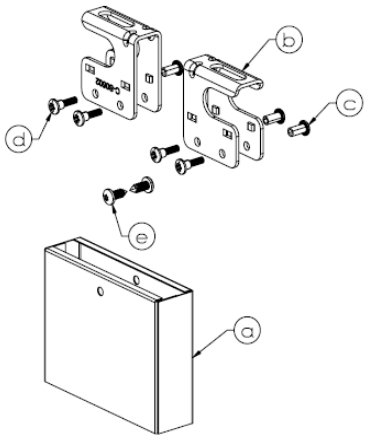

Part No.	Description	Qty.	List Price
HDWC-S0453-03	Actual Size 3"	1	$ 49.00
HDWC-S0453-04	Actual Size 4"	1	$ 49.00
HDWC-S0453-05	Actual Size 5"	1	$ 50.00
HDWC-S0453-06	Actual Size 6"	1	$ 50.00
HDWC-S0453-07	Actual Size 7"	1	$ 51.00
HDWC-S0453-08	Actual Size 8"	1	$ 51.00
HDWC-S0453-10	Actual Size 10"	1	$ 52.00
HDWC-S0453-12	Actual Size 12"	1	$ 56.00
HDWC-S0453-14	Actual Size 14"	1	$ 62.00
HDWC-S0453-16	Actual Size 16"	1	$ 66.00
HDWC-S0453-18	Actual Size 18"	1	$ 66.00
HDWC-S0453-22	Actual Size 22"	1	$ 76.00
HDWC-S0453-24	Actual Size 24"	1	$ 76.00

Includes Hardware:

	Part No.	Description	Qty.
a	HDWC-S0446-XX	Pilaster Shoe (XX equals the shoe size)	1
b	HDWC-S0502	Leveling Bracket FB/CH	2
c	FAST-S0017	Screw 10-24 x 1/2" BTN Step Barrel-Female Torx w/Pin 18-8 SS	2
d	FAST-P004	Screw 10-24 x ¾" BTN Step-Male Torx-T27 w/Pin 18-8 SS	2
e	FAST-S355A	Screw 1/4-14 x 5/8" BTN T/S Torx-T27 w/Pin 410SS NKLP	2

❹ Ceiling Stud (for Series 600)

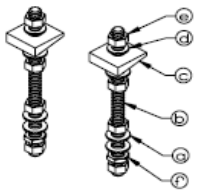

HDWT-Z0455-2 — List Price: $ 17.00

	Part No.	Description	Qty.
a	FAST-S0042	Washer .406 x .750 x .050 Flat 18-8 SS	6
b	FAST-T5416	Threaded Rod 3/8 - 16 x 6 UNC-2A	2
c	FAST-T680	Washer 1-1/4 SQ x 3/8 Bevel 3/8 Screw Cast Iron	2
d	FAST-T377	Washer ⅜" Split-Lock Zamac P S	2
e	FAST-T375	Nut 3/8 - 16 Hex Zamac P S	8
f	FAST-S0044	Spacer Nut 18-8 SS	2

NOTE: Torx bits are not included but can be ordered separately.

❹ Pilaster FTC Shoe Kit (Stainless Steel)

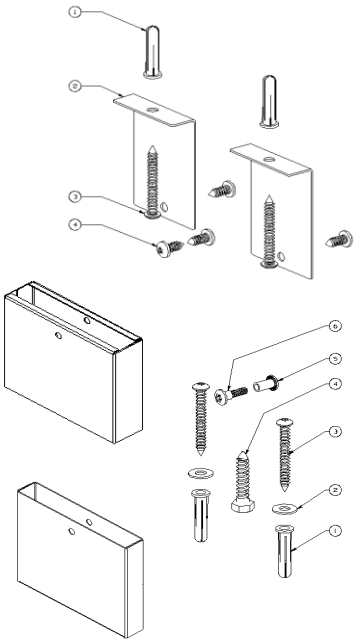

Part No.	Description	Qty.	List Price
HDWC-S0454-03	Actual Size 3"	1	$ 79.00
HDWC-S0454-04	Actual Size 4"	1	$ 80.00
HDWC-S0454-05	Actual Size 5"	1	$ 81.00
HDWC-S0454-06	Actual Size 6"	1	$ 82.00
HDWC-S0454-07	Actual Size 7"	1	$ 83.00
HDWC-S0454-08	Actual Size 8"	1	$ 83.00
HDWC-S0454-10	Actual Size 10"	1	$ 87.00
HDWC-S0454-12	Actual Size 12"	1	$ 92.00
HDWC-S0454-14	Actual Size 14"	1	$ 105.00
HDWC-S0454-16	Actual Size 16"	1	$ 106.00
HDWC-S0454-18	Actual Size 18"	1	$ 109.00
HDWC-S0454-22	Actual Size 22"	1	$ 109.00
HDWC-S0454-24	Actual Size 24"	1	$ 114.00

Includes Hardware:

	Part No.	Description	Qty.
	HDWC-S0443-XX	Pilaster Shoe (XX equals the shoe size)	1
	HDWC-S0446-XX	Pilaster Sleeve (XX equals the shoe size)	1
1	FAST-T373	Plastic Anchor #14-16 x 3/8"	2
2	HDWC-T0440	Bracket "L" FTC	2
3	FAST-P002	Screw 14 x 2 BTN SM Torx-T27 w/Pin 18-8 SS	2
4	FAST-S355A	Screw 1/4-14 x 5/8" BTN T/S Torx-T27 w/Pin 410SS NKLP	4
1	FAST-T373	Plastic Anchor #14-16 x 3/8"	2
2	P10-449	Washer.281x .625x .045 Flat 18-8 SS	2
3	FAST-P002	Screw 14 x 2 BTN SM Torx-T27 w/Pin 18-8 SS	2
4	FAST-S008	Screw 5/16 x 1-1/2 Hex Lag SS	1
5	FAST-S0017	Screw 10-24 x 1/2" BTN Step Barrel-Female Torx w/Pin 18-8 SS	1
6	FAST-P004	Screw 10-24 x ¾" BTN Step-Male Torx-T27 w/Pin 18-8 SS	1

NOTE: Torx bits are not included but can be ordered separately.

Inswing Door Kits

❺ Door Kit Inswing, Surface Hinge Any Hand, 2-Hinge Set, Indicator Latch (58" Door)

HDWC-SD1-S0567

List Price $ 146.00

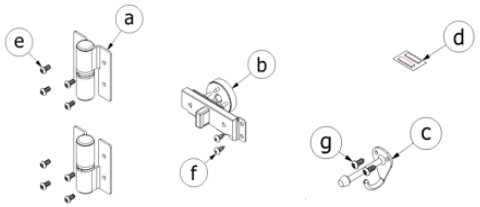

Includes:

	Part No.	Description	Qty
a	HDWC-S0558	Surface Hinge Any Hand 2-Hinge Set, Includes Cam	1
b	HDWC-S0483	Latch, Slide, Indicator, 3/4" Door, SS	1
c	HDWT-S285	Coat Hook with Bumper	1
d	HDWC-00566-58	Vibration Dampening Strip, .065 X .250 X 1", 2-Strip Set	1
e	FAST-S0045	Screw 1/4-20 x 1/2" BTN Cap Security TRX-T27 W/Pin SS	8
f	FAST-S0016	Screw #14 x 5/8" Sheet Metal Torx-T27 SS	2
g	FAST-S0019	Screw #10 x 5/8" BTN Sheet Metal Torx-T25 w/Pin SS	2

NOTE: Torx bits are not included but can be ordered separately.

❺ Door Kit Inswing RH 69/72", Surface Hinge RHI/LHO, 3-Hinge Set, Indicator Latch

HDWC-SD1-S0567-72RH

List Price $ 219.00

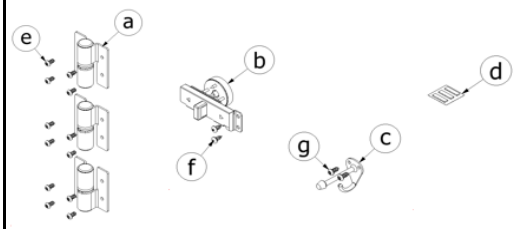

Includes:

	Part No.	Description	Qty
a	HDWC-S0559	Surface Hinge RHI/LHO 3-Hinge Set, Includes Cam	1
b	HDWC-S0483	Latch, Slide, Indicator, 3/4" Door, SS	1
c	HDWT-S285	Coat Hook with Bumper	1
d	HDWC-00566-72	Vibration Dampening Strip, .065 X .250 X 1", 3-Strip Set	1
e	FAST-S0045	Screw 1/4-20 x 1/2" BTN Cap Security TRX-T27 W/Pin SS	12
f	FAST-S0016	Screw #14 x 5/8" Sheet Metal Torx-T27 SS	2
g	FAST-S0019	Screw #10 x 5/8" BTN Sheet Metal Torx-T25 w/Pin SS	2

NOTE: Torx bits are not included but can be ordered separately.

❺ Door Kit Inswing LH 69/72", Surface Hinge LHI/RHO, 3-Hinge Set, Indicator Latch

HDWC-SD1-S0567-72LH

List Price $ 219.00

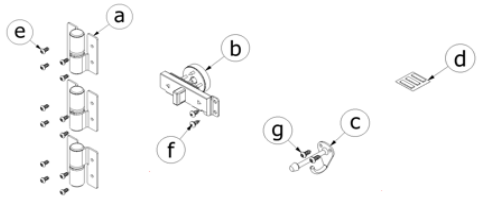

Includes:

	Part No.	Description	Qty
a	HDWC-S0560	Surface Hinge LHI/RHO 3-Hinge Set, Includes Cam	1
b	HDWC-S0483	Latch, Slide, Indicator, 3/4" Door, SS	1
c	HDWT-S285	Coat Hook with Bumper	1
d	HDWC-00566-72	Vibration Dampening Strip, .065 X .250 X 1", 3-Strip Set	1
e	FAST-S0045	Screw 1/4-20 x 1/2" BTN Cap Security TRX-T27 W/Pin SS	12
f	FAST-S0016	Screw #14 x 5/8" Sheet Metal Torx-T27 SS	2
g	FAST-S0019	Screw #10 x 5/8" BTN Sheet Metal Torx-T25 w/Pin SS	2

NOTE: Torx bits are not included but can be ordered separately.

Inswing Door Kits

❺ Door Kit Inswing, Surface Hinge Any Hand, 2-Hinge Set, Indicator Latch, Flat Strike at Pilaster

HDWC-SD1-S0568

List Price $ 113.00

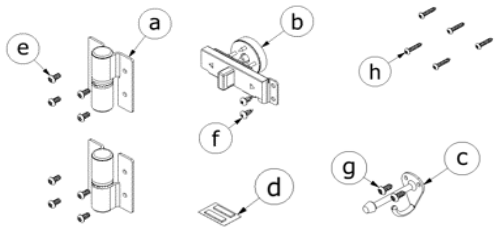

Includes:

	Part No.	Description	Qty
a	HDWC-S0558	Surface Hinge Any Hand 2-Hinge Set, Includes Cam	1
b	HDWC-S0483	Latch, Slide, Indicator, 3/4" Door, SS	1
c	HDWT-S285	Coat Hook with Bumper	1
d	HDWC-00566-58	Vibration Dampening Strip, .065 X .250 X 1", 2-Strip Set	1
e	FAST-S0045	Screw 1/4-20 x 1/2" BTN Cap Security TRX-T27 W/Pin SS	8
f	FAST-S0016	Screw #14 x 5/8" Sheet Metal Torx-T27 SS	2
g	FAST-S0019	Screw #10 x 5/8" BTN Sheet Metal Torx-T25 w/Pin SS	2
h	FAST-S0028	Screw #10 x 1" BTN Sheet Metal Torx-T27 w/Pin SS	5

NOTE: Torx bits are not included but can be ordered separately.

❺ Door Kit 69/72" RH Inswing, Surface Hinge RHI/LHO, 3-Hinge Set, Indicator Latch, Flat Strike at Pilaster

HDWC-SD1-S0568-72RH

List Price $ 171.00

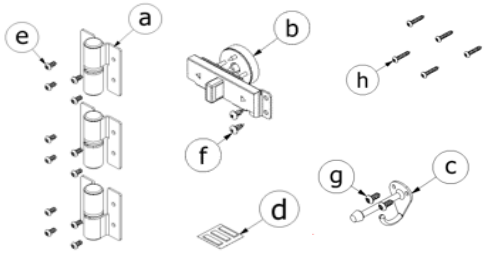

Includes:

	Part No.	Description	Qty
a	HDWC-S0559	Surface Hinge RHI/LHO 3-Hinge Set, Includes Cam	1
b	HDWC-S0483	Latch, Slide, Indicator, 3/4" Door, SS	1
c	HDWT-S285	Coat Hook with Bumper	1
d	HDWC-00566-72	Vibration Dampening Strip, .065 X .250 X 1", 3-Strip Set	1
e	FAST-S0045	Screw 1/4-20 x 1/2" BTN Cap Security TRX-T27 W/Pin SS	12
f	FAST-S0016	Screw #14 x 5/8" Sheet Metal Torx-T27 SS	2
g	FAST-S0019	Screw #10 x 5/8" BTN Sheet Metal Torx-T25 w/Pin SS	2
h	FAST-S0028	Screw #10 x 1" BTN Sheet Metal Torx-T27 w/Pin SS	5

NOTE: Torx bits are not included but can be ordered separately.

❺ Door Kit 69/72" LH Inswing, Surface Hinge LHI/RHO, 3-Hinge Set, Indicator Latch, Flat Strike at Pilaster

HDWC-SD1-S0568-72LH

List Price $ 171.00

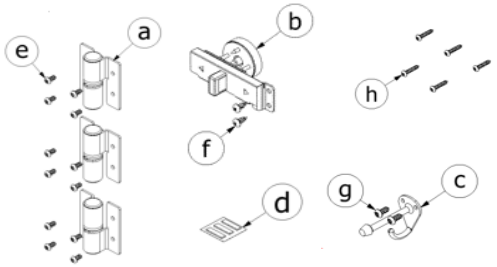

Includes:

	Part No.	Description	Qty
a	HDWC-S0560	Surface Hinge LHI/RHO 3-Hinge Set, Includes Cam	1
b	HDWC-S0483	Latch, Slide, Indicator, 3/4" Door, SS	1
c	HDWT-S285	Coat Hook with Bumper	1
d	HDWC-00566-72	Vibration Dampening Strip, .065 X .250 X 1", 3-Strip Set	1
e	FAST-S0045	Screw 1/4-20 x 1/2" BTN Cap Security TRX-T27 W/Pin SS	12
f	FAST-S0016	Screw #14 x 5/8" Sheet Metal Torx-T27 SS	2
g	FAST-S0019	Screw #10 x 5/8" BTN Sheet Metal Torx-T25 w/Pin SS	2
h	FAST-S0028	Screw #10 x 1" BTN Sheet Metal Torx-T27 w/Pin SS	5

NOTE: Torx bits are not included but can be ordered separately.

Effective Date March 15, 2022

Inswing Door Kits

❺ Door Kit Inswing, Surface Hinge Any Hand, 2-Hinge Set, Indicator Latch, Flat Strike at Wall

HDWC-SD1-S0591

List Price $ 116.00

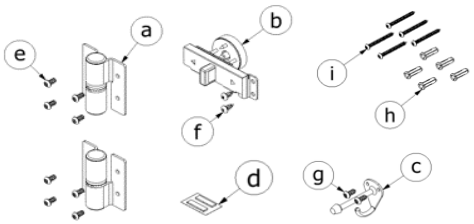

Includes:

	Part No.	Description	Qty
a	HDWC-S0558	Surface Hinge Any Hand 2-Hinge Set, Includes Cam	1
b	HDWC-S0483	Latch, Slide, Indicator, 3/4" Door, SS	1
c	HDWT-S285	Coat Hook with Bumper	1
d	HDWC-00566-58	Vibration Dampening Strip, .065 X .250 X 1", 2-Strip Set	1
e	FAST-S0045	Screw 1/4-20 x 1/2" BTN Cap Security TRX-T27 W/Pin SS	8
f	FAST-S0016	Screw #14 x 5/8" Sheet Metal Torx-T27 SS	2
g	FAST-S0019	Screw #10 x 5/8" BTN Sheet Metal Torx-T25 w/Pin SS	2
h	FAST-S0046	Screw #10 x 2" BTN Sheet Metal Torx-T25 w/Pin SS	5
i	FAST-T381	Plastic Anchor #10-12 x 1"	5

NOTE: Torx bits are not included but can be ordered separately.

❺ Door Kit 69/72" RH Inswing, Surface Hinge RHI/LHO, 3-Hinge Set, Indicator Latch, Flat Strike at Wall

HDWC-SD1-S0591-72RH

List Price $ 174.00

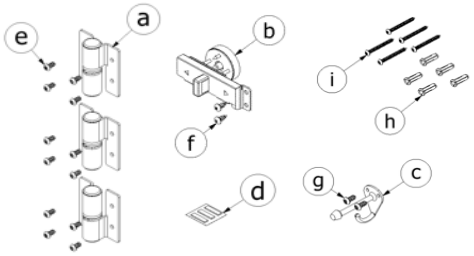

Includes:

	Part No.	Description	Qty
a	HDWC-S0559	Surface Hinge RHI/LHO 3-Hinge Set, Includes Cam	1
b	HDWC-S0483	Latch, Slide, Indicator, 3/4" Door, SS	1
c	HDWT-S285	Coat Hook with Bumper	1
d	HDWC-00566-72	Vibration Dampening Strip, .065 X .250 X 1", 3-Strip Set	1
e	FAST-S0045	Screw 1/4-20 x 1/2" BTN Cap Security TRX-T27 W/Pin SS	12
f	FAST-S0016	Screw #14 x 5/8" Sheet Metal Torx-T27 SS	2
g	FAST-S0019	Screw #10 x 5/8" BTN Sheet Metal Torx-T25 w/Pin SS	2
h	FAST-S0046	Screw #10 x 2" BTN Sheet Metal Torx-T25 w/Pin SS	5
i	FAST-T381	Plastic Anchor #10-12 x 1"	5

NOTE: Torx bits are not included but can be ordered separately.

❺ Door Kit 69/72" LH Inswing, Surface Hinge LHI/RHO, 3-Hinge Set, Indicator Latch, Flat Strike at Wall

HDWC-SD1-S0591-72LH

List Price $ 174.00

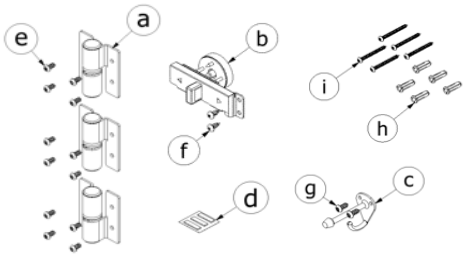

Includes:

	Part No.	Description	Qty
a	HDWC-S0560	Surface Hinge LHI/RHO 3-Hinge Set, Includes Cam	1
b	HDWC-S0483	Latch, Slide, Indicator, 3/4" Door, SS	1
c	HDWT-S285	Coat Hook with Bumper	1
d	HDWC-00566-72	Vibration Dampening Strip, .065 X .250 X 1", 3-Strip Set	1
e	FAST-S0045	Screw 1/4-20 x 1/2" BTN Cap Security TRX-T27 W/Pin SS	12
f	FAST-S0016	Screw #14 x 5/8" Sheet Metal Torx-T27 SS	2
g	FAST-S0019	Screw #10 x 5/8" BTN Sheet Metal Torx-T25 w/Pin SS	2
h	FAST-S0046	Screw #10 x 2" BTN Sheet Metal Torx-T25 w/Pin SS	5
i	FAST-T381	Plastic Anchor #10-12 x 1"	5

NOTE: Torx bits are not included but can be ordered separately.

Effective Date March 15, 2022

Inswing Door Kits

All Parts marked with * are for the original phenolic design discontinued in July 2021. These parts are not compatible with the No-Site™ design.
Please contact Bradley Customer Service if you need assistance.

5 **Inswing ADA Flat Strike Door Kit w/ Cam Piano Hinge Zero°**

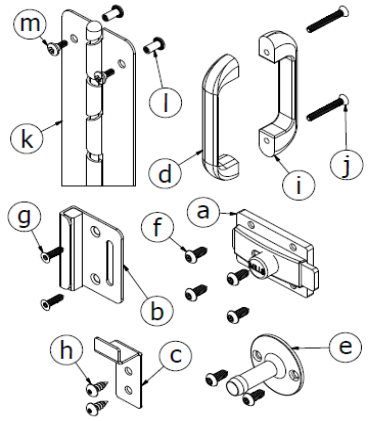

*** HDWC-S0549** — **List Price**

Includes: — $ 332.00

	Part No.	Description	Qty.
a	HDWL-S160	Slide Latch	1
b	HDWC-S0029	Flat Strike/Keeper Inswing	1
c	HDWT-S275	Coat Hook Outswing	1
d	HDWT-S282	Door Pull	1
e	HDWT-S177	Wall Bumper	1
f	FAST-S0019	Screw #10 x 5/8" BTN Sheet Metal Torx-T25 w/Pin SS	6
g	FAST-S0006	Screw #10 x 3/4" FL Sheet Metal Torx-T25	2
h	FAST-S0016	Screw #14 x 5/8" Sheet Metal Torx-T27 SS	2
i	HDW0-S0167	Door Pull with Countersink SS	1
j	FAST-S0027	Screw #10-24 x 2" Flat Machine Torx SS	2
k	HDWT-S0403-57	Cam Piano Hinge 57"	1
l	FAST-S0017	Screw #10-24 X 1/2" BTN Brl-Fem Torx-T27 w/Pin SS	14
m	FAST-S0018	Screw #10-24 x 1/2" Shoulder Torx-T27 SS	14

Also available for 72"H Doors - HDWC-S0549-69 — $ 373.00

Outswing Door Kits

❻ Door Kit Inswing-ADA / Outswing, Surface Hinge Any Hand, 2-Hinge Set, Indicator Latch

HDWC-SD2-S0569 — **List Price** $ 187.00

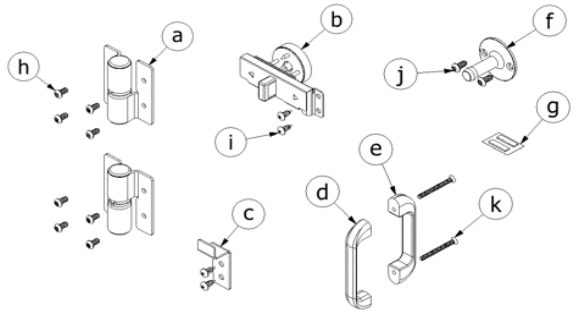

Includes:

	Part No.	Description	Qty
a	HDWC-S0558	Surface Hinge Any Hand 2-Hinge Set, Includes Cam	1
b	HDWC-S0483	Latch, Slide, Indicator, 3/4" Door, SS	1
c	HDWT-S275	Coat Hook Outswing	1
d	HDWT-S282	Door Pull	1
e	HDW0-S0167	Door Pull with Countersink SS	1
f	HDWT-S177	Wall Bumper	1
g	HDWC-00566-58	Vibration Dampening Strip, .065 X .250 X 1", 2-Strip Set	1
h	FAST-S0045	Screw 1/4-20 x 1/2" BTN Cap Security TRX-T27 W/Pin SS	8
i	FAST-S0016	Screw #14 x 5/8" Sheet Metal Torx-T27 SS	4
j	FAST-S0019	Screw #10 x 5/8" BTN Sheet Metal Torx-T25 w/Pin SS	2
k	FAST-S0027	Screw #10-24 x 2" Flat Machine Torx SS	2

NOTE: Torx bits are not included but can be ordered separately.

❻ Door Kit 69/72" RH Inswing-ADA / LH Outswing, Surface Hinge RHI/LHO, 3-Hinge Set, Indicator Latch

HDWC-SD2-S0569-72RH — **List Price** $ 282.00

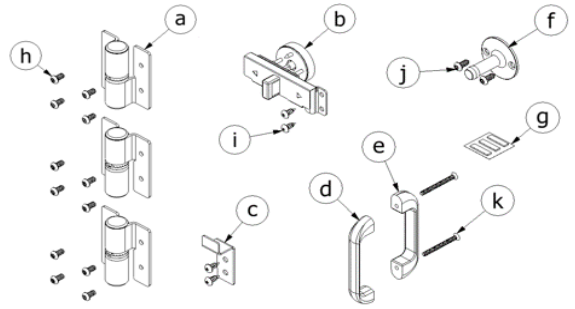

Includes:

	Part No.	Description	Qty
a	HDWC-S0559	Surface Hinge RHI/LHO 3-Hinge Set, Includes Cam	1
b	HDWC-S0483	Latch, Slide, Indicator, 3/4" Door, SS	1
c	HDWT-S275	Coat Hook Outswing	1
d	HDWT-S282	Door Pull	1
e	HDW0-S0167	Door Pull with Countersink SS	1
f	HDWT-S177	Wall Bumper	1
g	HDWC-00566-72	Vibration Dampening Strip, .065 X .250 X 1", 3-Strip Set	1
h	FAST-S0045	Screw 1/4-20 x 1/2" BTN Cap Security TRX-T27 W/Pin SS	12
i	FAST-S0016	Screw #14 x 5/8" Sheet Metal Torx-T27 SS	4
j	FAST-S0019	Screw #10 x 5/8" BTN Sheet Metal Torx-T25 w/Pin SS	2
k	FAST-S0027	Screw #10-24 x 2" Flat Machine Torx SS	2

NOTE: Torx bits are not included but can be ordered separately.

❻ Door Kit 69/72" LH Inswing-ADA / RH Outswing, Surface Hinge LHI/RHO, 3-Hinge Set, Indicator Latch

HDWC-SD2-S0569-72LH — **List Price** $ 282.00

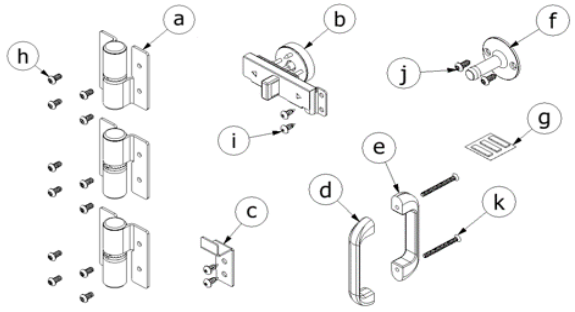

Includes:

	Part No.	Description	Qty
a	HDWC-S0560	Surface Hinge LHI/RHO 3-Hinge Set, Includes Cam	1
b	HDWC-S0483	Latch, Slide, Indicator, 3/4" Door, SS	1
c	HDWT-S275	Coat Hook Outswing	1
d	HDWT-S282	Door Pull	1
e	HDW0-S0167	Door Pull with Countersink SS	1
f	HDWT-S177	Wall Bumper	1
g	HDWC-00566-72	Vibration Dampening Strip, .065 X .250 X 1", 3-Strip Set	1
h	FAST-S0045	Screw 1/4-20 x 1/2" BTN Cap Security TRX-T27 W/Pin SS	12
i	FAST-S0016	Screw #14 x 5/8" Sheet Metal Torx-T27 SS	4
j	FAST-S0019	Screw #10 x 5/8" BTN Sheet Metal Torx-T25 w/Pin SS	2
k	FAST-S0027	Screw #10-24 x 2" Flat Machine Torx SS	2

NOTE: Torx bits are not included but can be ordered separately.

Outswing Door Kits

❻ Door Kit Inswing-ADA / Outswing, Surface Hinge Any Hand, 2-Hinge Set, Indicator Latch, Flat Strike at Pilaster

HDWC-SD2-S0570

List Price $ 141.00

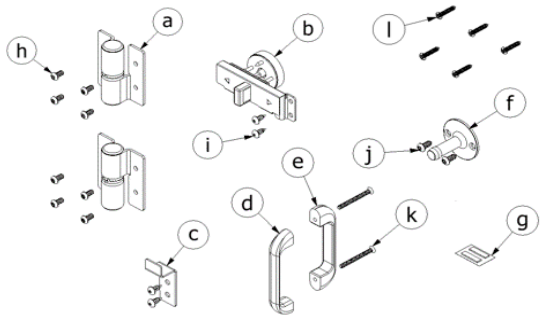

Includes:

	Part No.	Description	Qty
a	HDWC-S0558	Surface Hinge Any Hand 2-Hinge Set, Includes Cam	1
b	HDWC-S0483	Latch, Slide, Indicator, 3/4" Door, SS	1
c	HDWT-S275	Coat Hook Outswing	1
d	HDWT-S282	Door Pull	1
e	HDW0-S0167	Door Pull with Counrtsink SS	1
f	HDWT-S177	Wall Bumper	1
g	HDWC-00566-58	Vibration Dampening Strip, .065 X .250 X 1", 2-Strip Set	1
h	FAST-S0045	Screw 1/4-20 x 1/2" BTN Cap Security TRX-T27 W/Pin SS	8
i	FAST-S0016	Screw #14 x 5/8" Sheet Metal Torx-T27 SS	4
j	FAST-S0019	Screw #10 x 5/8" BTN Sheet Metal Torx-T25 w/Pin SS	2
k	FAST-S0027	Screw #10-24 x 2" Flat Machine Torx SS	2
l	FAST-S0028	Screw #10 x 1" BTN Sheet Metal Torx-T27 w/Pin SS	5

NOTE: Torx bits are not included but can be ordered separately.

❻ Door Kit 69/72" RH Inswing-ADA / LH Outswing, Surface Hinge RHI/LHO, 3-Hinge Set, Indicator Latch, Flat Strike at Pilaster

HDWC-SD2-S0570-72RH

List Price $ 212.00

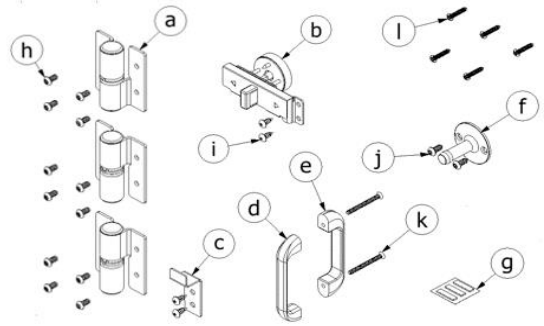

Includes:

	Part No.	Description	Qty
a	HDWC-S0559	Surface Hinge RHI/LHO 3-Hinge Set, Includes Cam	1
b	HDWC-S0483	Latch, Slide, Indicator, 3/4" Door, SS	1
c	HDWT-S275	Coat Hook Outswing	1
d	HDWT-S282	Door Pull	1
e	HDW0-S0167	Door Pull with Counrtsink SS	1
f	HDWT-S177	Wall Bumper	1
g	HDWC-00566-72	Vibration Dampening Strip, .065 X .250 X 1", 3-Strip Set	1
h	FAST-S0045	Screw 1/4-20 x 1/2" BTN Cap Security TRX-T27 W/Pin SS	12
i	FAST-S0016	Screw #14 x 5/8" Sheet Metal Torx-T27 SS	4
j	FAST-S0019	Screw #10 x 5/8" BTN Sheet Metal Torx-T25 w/Pin SS	2
k	FAST-S0027	Screw #10-24 x 2" Flat Machine Torx SS	2
l	FAST-S0028	Screw #10 x 1" BTN Sheet Metal Torx-T27 w/Pin SS	5

NOTE: Torx bits are not included but can be ordered separately.

❻ Door Kit 69/72" LH Inswing-ADA / RH Outswing, Surface Hinge LHI/RHO, 3-Hinge Set, Indicator Latch, Flat Strike at Pilaster

HDWC-SD2-S0570-72LH

List Price $ 212.00

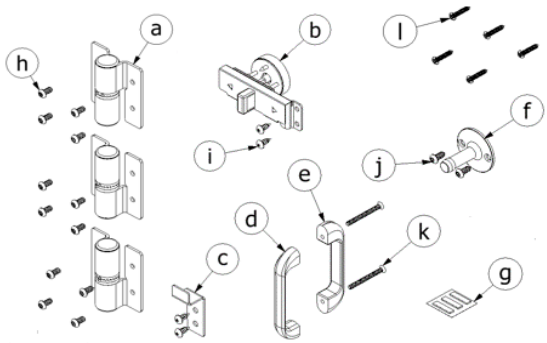

Includes:

	Part No.	Description	Qty
a	HDWC-S0560	Surface Hinge LHI/RHO 3-Hinge Set, Includes Cam	1
b	HDWC-S0483	Latch, Slide, Indicator, 3/4" Door, SS	1
c	HDWT-S275	Coat Hook Outswing	1
d	HDWT-S282	Door Pull	1
e	HDW0-S0167	Door Pull with Counrtsink SS	1
f	HDWT-S177	Wall Bumper	1
g	HDWC-00566-72	Vibration Dampening Strip, .065 X .250 X 1", 3-Strip Set	1
h	FAST-S0045	Screw 1/4-20 x 1/2" BTN Cap Security TRX-T27 W/Pin SS	12
i	FAST-S0016	Screw #14 x 5/8" Sheet Metal Torx-T27 SS	4
j	FAST-S0019	Screw #10 x 5/8" BTN Sheet Metal Torx-T25 w/Pin SS	2
k	FAST-S0027	Screw #10-24 x 2" Flat Machine Torx SS	2
l	FAST-S0028	Screw #10 x 1" BTN Sheet Metal Torx-T27 w/Pin SS	5

NOTE: Torx bits are not included but can be ordered separately.

Outswing Door Kits

❻	Door Kit Inswing-ADA / Outswing, Surface Hinge Any Hand, 2-Hinge Set, Indicator Latch, Flat Strike at Wall	HDWC-SD2-S0592				List Price
		Includes:				$ 141.00
			Part No.	Description	Qty	
		a	HDWC-S0558	Surface Hinge Any Hand 2-Hinge Set, Includes Cam	1	
		b	HDWC-S0483	Latch, Slide, Indicator, 3/4" Door, SS	1	
		c	HDWT-S275	Coat Hook Outswing	1	
		d	HDWT-S282	Door Pull	1	
		e	HDW0-S0167	Door Pull with Counrtsink SS	1	
		f	HDWT-S177	Wall Bumper	1	
		g	HDWC-00566-58	Vibration Dampening Strip, .065 X .250 X 1", 2-Strip Set	1	
		h	FAST-S0045	Screw 1/4-20 x 1/2" BTN Cap Security TRX-T27 W/Pin SS	8	
		i	FAST-S0016	Screw #14 x 5/8" Sheet Metal Torx-T27 SS	4	
		j	FAST-S0019	Screw #10 x 5/8" BTN Sheet Metal Torx-T25 w/Pin SS	2	
		k	FAST-S0027	Screw #10-24 x 2" Flat Machine Torx Torx SS	2	
		l	FAST-S0046	Screw #10 x 2" BTN Sheet Metal Torx-T25 w/Pin SS	5	
		m	FAST-T381	Plastic Anchor #10-12 x 1"	5	
		NOTE: Torx bits are not included but can be ordered separately.				

❻	Door Kit 69/72" RH Inswing-ADA / LH Outswing, Surface Hinge RHI/LHO, 3-Hinge Set, Indicator Latch, Flat Strike at Wall	HDWC-SD2-S0592-72RH				List Price
		Includes:				$ 212.00
		a	HDWC-S0559	Surface Hinge RHI/LHO 3-Hinge Set, Includes Cam	1	
		b	HDWC-S0483	Latch, Slide, Indicator, 3/4" Door, SS	1	
		c	HDWT-S275	Coat Hook Outswing	1	
		d	HDWT-S282	Door Pull	1	
		e	HDW0-S0167	Door Pull with Counrtsink SS	1	
		f	HDWT-S177	Wall Bumper	1	
		g	HDWC-00566-72	Vibration Dampening Strip, .065 X .250 X 1", 3-Strip Set	1	
		h	FAST-S0045	Screw 1/4-20 x 1/2" BTN Cap Security TRX-T27 W/Pin SS	12	
		i	FAST-S0016	Screw #14 x 5/8" Sheet Metal Torx-T27 SS	4	
		j	FAST-S0019	Screw #10 x 5/8" BTN Sheet Metal Torx-T25 w/Pin SS	2	
		k	FAST-S0027	Screw #10-24 x 2" Flat Machine Torx Torx SS	2	
		l	FAST-S0046	Screw #10 x 2" BTN Sheet Metal Torx-T25 w/Pin SS	5	
		m	FAST-T381	Plastic Anchor #10-12 x 1"	5	
		NOTE: Torx bits are not included but can be ordered separately.				

❻	Door Kit 69/72" LH Inswing-ADA / RH Outswing, Surface Hinge LHI/RHO, 3-Hinge Set, Indicator Latch, Flat Strike at Wall	HDWC-SD2-S0592-72LH				List Price
		Includes:				$ 212.00
		a	HDWC-S0559	Surface Hinge RHI/LHO 3-Hinge Set, Includes Cam	1	
		b	HDWC-S0483	Latch, Slide, Indicator, 3/4" Door, SS	1	
		c	HDWT-S275	Coat Hook Outswing	1	
		d	HDWT-S282	Door Pull	1	
		e	HDW0-S0167	Door Pull with Counrtsink SS	1	
		f	HDWT-S177	Wall Bumper	1	
		g	HDWC-00566-72	Vibration Dampening Strip, .065 X .250 X 1", 3-Strip Set	1	
		h	FAST-S0045	Screw 1/4-20 x 1/2" BTN Cap Security TRX-T27 W/Pin SS	12	
		i	FAST-S0016	Screw #14 x 5/8" Sheet Metal Torx-T27 SS	4	
		j	FAST-S0019	Screw #10 x 5/8" BTN Sheet Metal Torx-T25 w/Pin SS	2	
		k	FAST-S0027	Screw #10-24 x 2" Flat Machine Torx Torx SS	2	
		l	FAST-S0046	Screw #10 x 2" BTN Sheet Metal Torx-T25 w/Pin SS	5	
		m	FAST-T381	Plastic Anchor #10-12 x 1"	5	
		NOTE: Torx bits are not included but can be ordered separately.				

Pilaster-Panel Kits

❼ Pilaster at Wall "F" Bracket

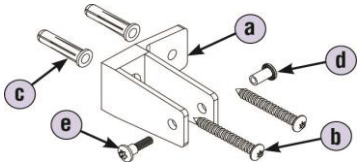

HDWC-S3FF — **List Price** $ 45.00

Includes:

	Part No.	Description	Qty.
a	HDWC-S337	Bracket, Stirrup, Single-Ear	2
b	FAST-P002	Screw #14 x 2" BTN Sheet Metal Torx-T27 w/Pin SS	4
c	FAST-T373	Anchor - Plastic #14-16 x 1⅜" Lg.	4
d	FAST-S0017	Screw #10-24 x ½" BTN Barrel-Female w/Pin SS	2
e	FAST-P004	Screw #10-24 x ¾" BTN Step-Male Torx-T27	2

Also available in 3-Bracket pack - HDWC-S0576 — $ 68.00

NOTE: Torx bits are not included but can be ordered separately.

❼ Pilaster at Wall "F" Bracket (Stn. Steel Continuous)

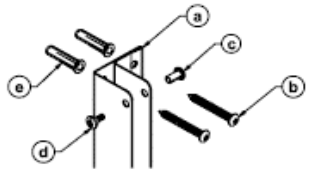

HDWC-S0480-57 — **List Price** $ 116.00

Includes:

	Part No.	Description	Qty.
a	HDWC-S184-57	Bracket, 1-Ear, 3/4" x 57"	1
b	FAST-P002	Screw #14 x 2" BTN Sheet Metal Torx-T27 w/Pin SS	10
c	FAST-S0017	Screw #10-24 x ½" BTN Barrel-Female w/Pin SS	5
d	FAST-S0018	Screw #10-24 x ½" Shoulder Torx-T27 SS	5
e	FAST-T373	Anchor - Plastic #14-16 x 1⅜" Lg.	10

Also available in Aluminum - HDWC-A0040 — $ 98.00

Also available in 68" & 71" Heights - HDWC-S0480-68/-71 — $ 145.00

NOTE: Torx bits are not included but can be ordered separately.

Pilaster at Panel "F" Bracket

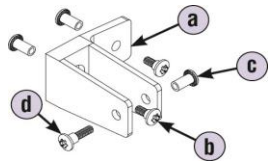

HDWC-S0015 — **List Price** $ 45.00

Includes:

	Part No.	Description	Qty.
a	HDWC-S337	Bracket, Stirrup, Single-Ear	2
b	FAST-S0018	Screw #10-24 x ½" Shoulder Torx-T27 SS	4
c	FAST-S0017	Screw #10-24 x ½" BTN Barrel-Female w/Pin SS	6
d	FAST-P004	Screw #10-24 x ¾" BTN Step-Male Torx-T27	2

Also available in 3-Bracket pack - HDWC-S0577 — $ 68.00

NOTE: Torx bits are not included but can be ordered separately.

Pilaster at Panel "F" Bracket (Stn. Steel Continuous)

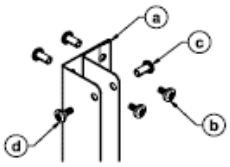

HDWC-S0481A-57 — **List Price** $ 126.00

Includes:

	Part No.	Description	Qty.
a	HDWC-S184-57	Bracket, Continuous, Single-Ear	1
b	FAST-S0015	Screw #10-24 x ⅜" Machine Torx-T27 SS	10
c	FAST-S0017	Screw #10-24 x ½" BTN Barrel-Female w/Pin SS	15
d	FAST-S0018	Screw #10-24 x ½" Shoulder Torx-T27 SS	5

Also available in Aluminum - HDWC-A0166 — $ 98.00

Also available in 68" & 71" Heights - HDWC-S0481A-68/-71 — $ 160.00

NOTE: Torx bits are not included but can be ordered separately.

Pilaster at Pilaster "F" Bracket

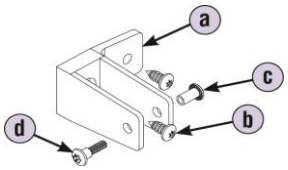

HDWC-S0016 — **List Price** $ 29.00

Includes:

	Part No.	Description	Qty.
a	HDWC-S337	Bracket, Stirrup, Single-Ear	2
b	FAST-S0016	Screw #14 x ⅝" Sheet Metal Torx-T27 SS	4
c	FAST-S0017	Screw #10-24 x ½" BTN Barrel-Female w/Pin SS	2
d	FAST-P004	Screw #10-24 x ¾" BTN Step-Male Torx-T27	2

Also available in 3-Bracket pack - HDWC-S0578 — $ 45.00

NOTE: Torx bits are not included but can be ordered separately.

Pilaster at Pilaster "F" Bracket (Stn. Steel Continuous)

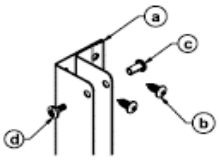

HDWC-S0481-57 — **List Price** $ 111.00

Includes:

	Part No.	Description	Qty.
a	HDWC-S184-57	Bracket, Continuous, Single-Ear	1
b	FAST-S0016	Screw #14 x ⅝" Sheet Metal Torx-T27 SS	10
c	FAST-S0017	Screw #10-24 x ½" BTN Barrel-Female w/Pin SS	5
d	FAST-S0018	Screw #10-24 x ½" Shoulder Torx-T27 SS	5

Also available in Aluminum - HDWC-A0041 — $ 98.00

Also available in 68" & 71" Heights - HDWC-S0481-68/-71 — $ 139.00

NOTE: Torx bits are not included but can be ordered separately.

Dividing Panel and End Panel Kits

❽ Dividing Panel Kit

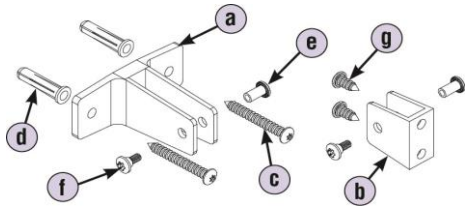

HDWC-S1PD — **List Price**

Includes: $ 50.00

	Part No.	Description	Qty.
a	HDWC-S334	Bracket, Double-Ear Wall	2
b	HDWC-S336	Bracket, Stirrup, "U"	2
c	FAST-P002	Screw #14 x 2" BTN Sheet Metal Torx-T27 w/Pin SS	4
d	FAST-T373	Anchor - Plastic #14-16 x 1⅜" Lg.	4
e	FAST-S0017	Screw #10-24 x ½" BTN Barrel-Female w/Pin SS	4
f	FAST-S0018	Screw #10-24 x ½" Shoulder Torx-T27 SS	4
g	FAST-S0016	Screw #14 x ⅝" Sheet Metal Torx-T27 SS	4

Also available in 3-Bracket pack - HDWC-S0579 — $ 76.00

NOTE: Torx bits are not included but can be ordered separately.

❾ Ending Panel Kit

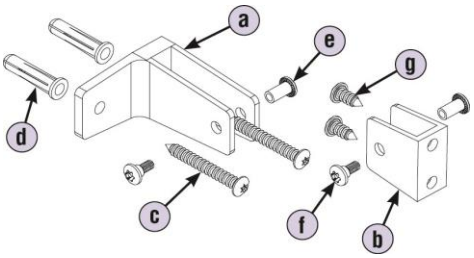

HDWC-S2PE — **List Price**

Includes: $ 48.00

	Part No.	Description	Qty.
a	HDWC-S332	Bracket, Stirrup, Single-Ear	2
b	HDWC-S336	Bracket, Stirrup, "U"	2
c	FAST-P002	Screw #14 x 2" BTN Sheet Metal Torx-T27 w/Pin SS	4
d	FAST-T373	Anchor - Plastic #14-16 x 1⅜" Lg.	4
e	FAST-S0017	Screw #10-24 x ½" BTN Barrel-Female w/Pin SS	4
f	FAST-S0018	Screw #10-24 x ½" Shoulder Torx-T27 SS	4
g	FAST-S0016	Screw #14 x ⅝" Sheet Metal Torx-T27 SS	4

Also available in 3-Bracket pack - HDWC-S0580 — $ 71.00

NOTE: Torx bits are not included but can be ordered separately.

❾ Dividing/Ending Panel Kit (Stainless Steel Continuous)

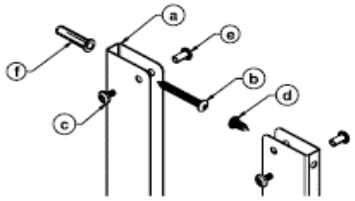

HDWC-S0475-57 — **List Price**

Includes: $ 191.00

	Part No.	Description	Qty.
a	C190-02-57	Bracket, "U" Continuous, 2" x 57"	2
b	FAST-P002	Screw #14 x 2" BTN Sheet Metal Torx-T27 w/Pin SS	5
c	FAST-S0015	Screw #10-24 x ⅜" Machine Torx-T27 SS	10
d	FAST-S0016	Screw #14 x ⅝" Sheet Metal Torx-T27 SS	5
e	FAST-S0017	Screw #10-24 x ½" BTN Barrel-Female w/Pin SS	10
f	FAST-T373	Anchor - Plastic #14-16 x 1⅜" Lg.	5

Also available in 68" & 71" Heights - HDWC-S0475-68/-71 — $ 238.00

NOTE: Torx bits are not included but can be ordered separately.

❾ Dividing/Ending Panel @ Pilaster Kit (Stainless Continuous)

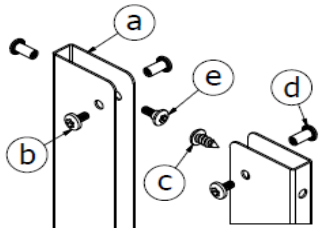

HDWC-S0476-57 — **List Price**

Includes: $ 191.00

	Part No.	Description	Qty.
a	C190-02-57	Bracket, "U" Continuous, 2" x 57"	2
b	FAST-S0015	Screw #10-24 x ⅜" Machine Torx-T27 SS	15
c	FAST-S0016	Screw #14 x ⅝" Sheet Metal Torx-T27 SS	5
d	FAST-S0017	Screw #10-24 x ½" BTN Barrel-Female w/Pin SS	15

Also available in 68" & 71" Heights - HDWC-S0476-68/-71 — $ 238.00

NOTE: Torx bits are not included but can be ordered separately.

Additional Kits

Alcove Kit	HDWC-S4AL			List Price
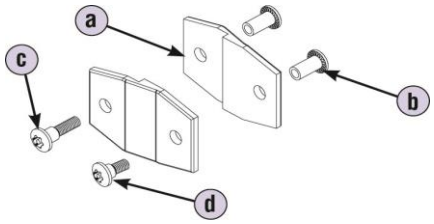	Includes:			$ 67.00
	Part No.	Description	Qty.	
	a	HDWT-S341	Bracket, Alcove	4
	b	FAST-S0017	Screw #10-24 x ½" BTN Barrel-Female w/Pin SS	4
	c	FAST-P004	Screw #10-24 x ¾" BTN Step-Male Torx-T27	2
	d	FAST-S0018	Screw #10-24 x ½" Shoulder Torx-T27 SS	2
	Also available in 3-Bracket Pack - HDWC-S0581			$ 77.00

NOTE: Torx bits are not included but can be ordered separately.

Alcove Kit (Continuous)	HDWC-S0479-57			List Price
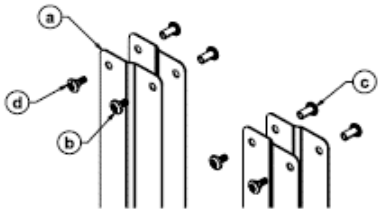	Includes:			$ 194.00
	Part No.	Description	Qty.	
	a	HDWT-S0290-57	Bracket, Continuous Alcove Offset	4
	b	FAST-S0015	Screw #10-24 x 3/8" Machine Torx-T27 SS	10
	c	FAST-S0017	Screw #10-24 x ½" BTN Barrel-Female w/Pin SS	20
	d	FAST-S0018	Screw #10-24 x ½" Shoulder Torx-T27 SS	10
	Also available in 68" & 71" Heights - HDWC-S0479-68/-71			$ 244.00

NOTE: Torx bits are not included but can be ordered separately.

Dividing Alcove Panel Kit (Stainless Steel Stirrup)	HDWC-S0286			List Price
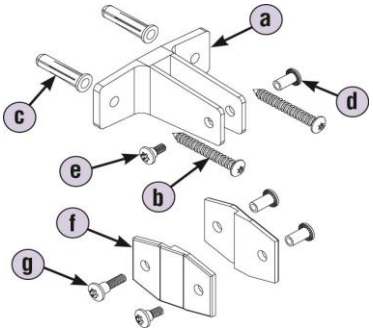	Includes:			$ 119.00
	Part No.	Description	Qty.	
	a	HDWC-S334	Bracket, Double-Ear Wall	2
	b	FAST-P002	Screw #14 x 2" BTN Sheet Metal Torx-T27 w/Pin SS	4
	c	FAST-T373	Anchor - Plastic #14-16 x 1⅜" Lg.	4
	d	FAST-S0017	Screw #10-24 x ½" BTN Barrel-Female w/Pin SS	6
	e	FAST-S0018	Screw #10-24 x ½" Shoulder Torx-T27 SS	4
	f	HDWT-S341	Bracket, Alcove	4
	g	FAST-P004	Screw #10-24 x ¾" BTN Step-Male Torx-T27	2
	Also available in 3-Bracket Pack - HDWC-S0582			$ 179.00

NOTE: Torx bits are not included but can be ordered separately.

Ending Alcove Panel Kit (Stainless Steel Stirrup)	HDWC-S0287			List Price
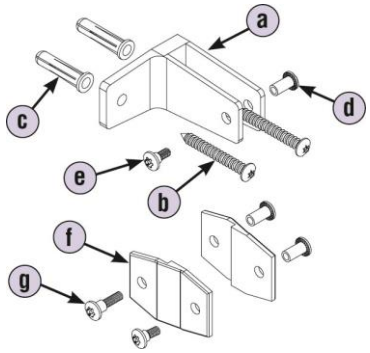	Includes:			$ 119.00
	Part No.	Description	Qty.	
	a	HDWC-S332	Bracket, Stirrup, Single-Ear	2
	b	FAST-P002	Screw #14 x 2" BTN Sheet Metal Torx-T27 w/Pin SS	4
	c	FAST-T373	Anchor - Plastic #14-16 x 1⅜" Lg.	4
	d	FAST-S0017	Screw #10-24 x ½" BTN Barrel-Female w/Pin SS	6
	e	FAST-S0018	Screw #10-24 x ½" Shoulder Torx-T27 SS	4
	f	HDWT-S341	Bracket, Alcove	4
	g	FAST-P004	Screw #10-24 x ¾" BTN Step-Male Torx-T27	2
	Also available in 3-Bracket Pack - HDWC-S0583			$ 179.00

NOTE: Torx bits are not included but can be ordered separately.

Additional Kits

Dividing/Ending Alcove Panel Kit (Stainless Steel Continuous)

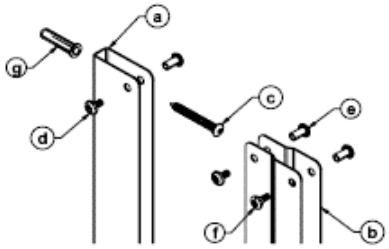

HDWC-S0477-57 — List Price $ 298.00

Includes:

	Part No.	Description	Qty.
a	C190-02-57	Bracket, "U" Continuous, 2" x 57"	1
b	HDWT-S0290-57	Bracket, Continuous Alcove, Offset	2
c	FAST-P002	Screw #14 x 2" BTN Sheet Metal Torx-T27 w/Pin SS	5
d	FAST-S0015	Screw #10-24 x ⅜" Machine Torx-T27 SS	10
e	FAST-S0017	Screw #10-24 x ½" BTN Barrel-Female w/Pin SS	15
f	FAST-S0018	Screw #10-24 x ½" Shoulder Torx-T27 SS	5
g	FAST-T373	Anchor - Plastic #14-16 x 1⅜" Lg.	5

Also available in 68" & 71" Heights - HDWC-S0477-68/-71 — $ 373.00

NOTE: Torx bits are not included but can be ordered separately.

Dividing/Ending Alcove Panel @ Panel Kit (Stainless Continuous)

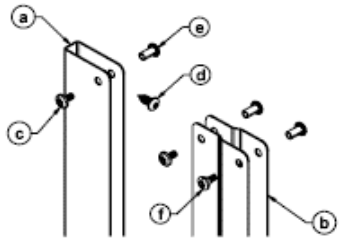

HDWC-S0478-57 — List Price $ 298.00

Includes:

	Part No.	Description	Qty.
a	C190-02-57	Bracket, "U" Continuous, 2" x 57"	1
b	HDWT-S0290-57	Bracket, Continuous Alcove, Offset	2
c	FAST-S0015	Screw #10-24 x ⅜" Machine Torx-T27 SS	10
d	FAST-S0016	Screw #14 x ⅝" Sheet Metal Torx-T27 SS	5
e	FAST-S0017	Screw #10-24 x ½" BTN Barrel-Female w/Pin SS	15
f	FAST-S0018	Screw #10-24 x ½" Shoulder Torx-T27 SS	5

Also available in 68" & 71" Heights - HDWC-S0478-68/-71 — $ 373.00

NOTE: Torx bits are not included but can be ordered separately.

Urinal Screen Bracket Kit

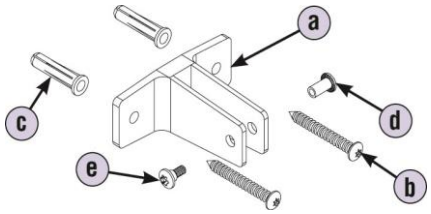

HDWC-S5US — List Price $ 48.00

Includes:

	Part No.	Description	Qty.
a	HDWC-S334	Bracket, 2-Ear, Wall	3
b	FAST-P002	Screw #14 x 2" BTN Sheet Metal Torx-T27 w/Pin SS	6
c	FAST-T373	Anchor - Plastic #14-16 x 1⅜" Lg.	6
d	FAST-S0017	Screw #10-24 x ½" BTN Barrel-Female w/Pin SS	3
e	FAST-S0018	Screw #10-24 x ½" Shoulder Torx-T27 SS	3

NOTE: Torx bits are not included but can be ordered separately.

Urinal Screen Bracket Kit (Stainless Steel Continuous)

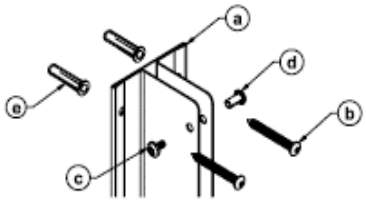

HDWC-S0482-47 — List Price $ 135.00

Includes:

	Part No.	Description	Qty.
a	HDWC-S186-47	Bracket, 2-Ear, Continuous 1" x 47"	1
b	FAST-P002	Screw #14 x 2" BTN Sheet Metal Torx-T27 w/Pin SS	8
c	FAST-S0015	Screw #10-24 x ⅜" Machine Torx-T27 SS	4
d	FAST-S0017	Screw #10-24 x ½" BTN Barrel-Female w/Pin SS	4
e	FAST-T373	Anchor - Plastic #14-16 x 1⅜" Lg.	8

Also available in 41" Height - HDWC-S0482-41 — $ 106.00

NOTE: Torx bits are not included but can be ordered separately.

Dividing Urinal Screen Bracket Kit (Stn. Steel Cont.)

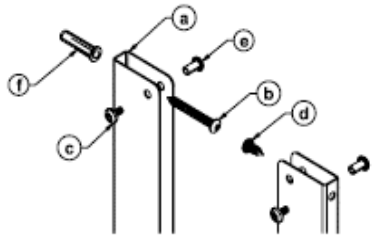

HDWC-S0475-47 — List Price $ 186.00

Includes:

	Part No.	Description	Qty.
a	C190-02-47	Bracket, "U" Continuous, 2" x 47"	2
b	FAST-P002	Screw #14 x 2" BTN Sheet Metal Torx-T27 w/Pin SS	4
c	FAST-S0015	Screw #10-24 x ⅜" Machine Torx-T27 SS	8
d	FAST-S0016	Screw #14 x ⅝" Sheet Metal Torx-T27 SS	4
e	FAST-S0017	Screw #10-24 x ½" BTN Barrel-Female w/Pin SS	8
f	FAST-T373	Anchor - Plastic #14-16 x 1⅜" Lg.	4

Also available in 41" Height - HDWC-S0475-41 — $ 162.00

NOTE: Torx bits are not included but can be ordered separately.

Additional Kits

***No-Site™ Phenolic Only**

Surface Hinge Kit, Any Hand, 2-Hinge Set — **HDWC-S0561** — **List Price** $ 91.00

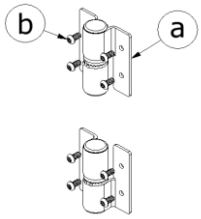

Includes:

	Part No.	Description	Qty
a	HDWC-S0558	Surface Hinge Any Hand 2-Hinge Set, Includes Cam	1
b	FAST-S0045	Screw 1/4-20 x 1/2" BTN Cap Security TRX-T27 W/Pin S	8

Surface Hinge Kit, RHI/LHO, 3-Hinge Set — **HDWC-S0562** — **List Price** $ 137.00

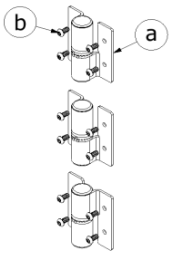

Includes:

	Part No.	Description	Qty
a	HDWC-S0559	Surface Hinge RHI/LHO 3-Hinge Set, Includes Cam	1
b	FAST-S0045	Screw 1/4-20 x 1/2" BTN Cap Security TRX-T27 W/Pin S	12

Surface Hinge Kit, LHI/RHO, 3-Hinge Set — **HDWC-S0563** — **List Price** $ 137.00

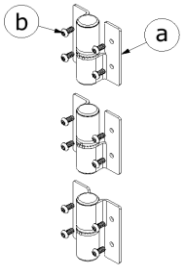

Includes:

	Part No.	Description	Qty
a	HDWC-S0560	Surface Hinge LHI/RHO 3-Hinge Set, Includes Cam	1
b	FAST-S0045	Screw 1/4-20 x 1/2" BTN Cap Security TRX-T27 W/Pin S	12

Indicator Slide Latch Kit — **HDWC-S0596** — **List Price** $ 44.00

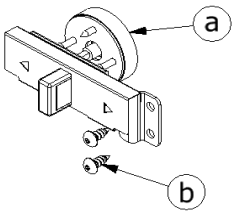

Includes:

	Part No.	Description	Qty
a	HDWC-S0483	Latch, Slide, Indicator, 3/4" Door, SS	1
b	FAST-S0016	Screw #14 x 5/8" Sheet Metal Torx-T27 SS	2

Additional Kits

***No-Site™ Phenolic Only**

Door Pull Kit

HDW0-S0598

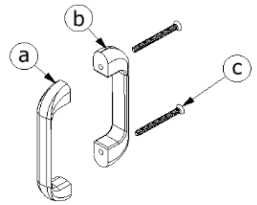

Includes:

List Price
$ 46.00

	Part No.	Description	Qty
a	HDWT-S282	Door Pull	1
b	HDW0-S0167	Door Pull with Countersink SS	1
c	FAST-S0027	Screw #10-24 x 2" Flat Machine Torx SS	2

Flat Strike Kit at Wall

HDWC-00600-58-XXXX

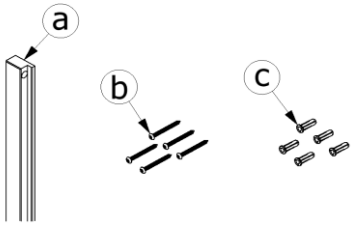

Includes:

List Price
$ 170.00

	Part No.	Description	Qty
a	HDWC-00574-58-XXXX	Continuous 58" Phenolic Flat Strike	1
b	FAST-S0046	Screw #10 x 2" BTN Sheet Metal Torx-T25 w/Pin SS	5
c	FAST-T381	Plastic Anchor #10-12 x 1"	5

Also Available in 69"H - HDWC-00600-69-XXXX
Also Available in 72"H - HDWC-00600-72-XXXX
XXXX = Color

Flat Strike Kit at Pilaster

HDWC-00601-58-XXXX

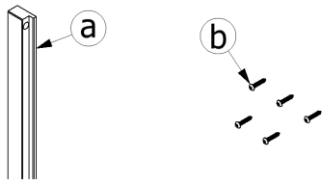

Includes:

List Price
$ 164.00

	Part No.	Description	Qty
a	HDWC-00574-58-XXXX	Continuous 58" Phenolic Flat Strike	1
b	FAST-S0028	Screw #10 x 1" BTN Sheet Metal Torx-T27 w/Pin SS	5

Also Available in 69"H - HDWC-00601-69-XXXX
Also Available in 72"H - HDWC-00601-72-XXXX
XXXX = Color

Vibration Dampening Strips

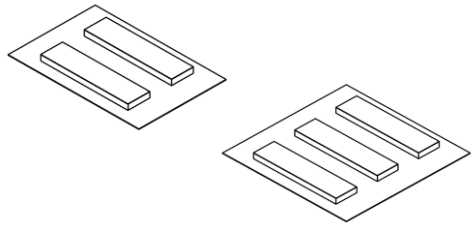

Part No.	Description	Qty	List Price
HDWC-00566-58	Vibration Dampening Strip, .065 X .250 X 1", 2-Strip Set	1	$ 4.00
HDWC-00566-72	Vibration Dampening Strip, .065 X .250 X 1", 3-Strip Set	1	$ 6.00

Additional Kits

All Parts marked with * are for the original phenolic design discontinued in July 2021. These parts are not compatible with the No-Site™ design.
Please contact Bradley Customer Service if you need assistance.

Floor-To-Ceiling Aluminum Post with Shoes

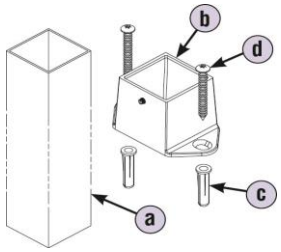

HDWT-Z0194 — List Price $ 127.00

Includes:

	Part No.	Description	Qty.
a	T462-120	Aluminum Post 120"	1
b	HDWT-T284	Shoe for 1¾" Aluminum Post	2
c	FAST-T373	Anchor - Plastic #14-16 x 1⅜" Lg.	4
d	FAST-Z002	Screw #14 x 2" Sheet Metal Torx-T27 w/Pin ZP	4

NOTE: Torx bits are not included but can be ordered separately.

Floor-Braced Aluminum Post with Shoes and Cap

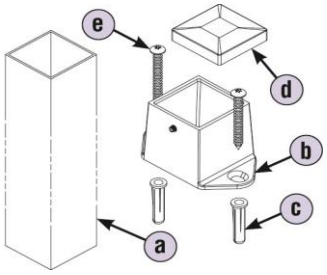

HDWT-Z0195 — List Price $ 90.00

Includes:

	Part No.	Description	Qty.
a	T462-060	Aluminum Post 60"	1
b	HDWT-T284	Shoe for 1¾" Aluminum Post	1
c	FAST-T373	Anchor - Plastic #14-16 x 1⅜" Lg.	2
d	HDWT-T181	Cap for 1¾" Aluminum Post	1
e	FAST-Z002	Screw #14 x 2" Sheet Metal Torx-T27 w/Pin ZP	2

NOTE: Torx bits are not included but can be ordered separately.

No-Site Strips, Inswing Latch and Hinge Sides

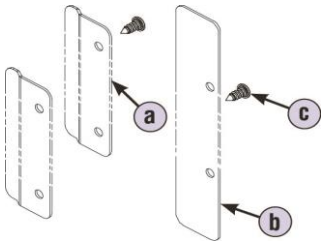

*** HDWC-S0421** — List Price $ 50.00

Includes:

	Part No.	Description	Qty.
a	HDWC-S0419	No-Site Strip, Latch Side 1-5/8"W x 25"H	2
b	HDWC-S0420	No-Site Strip, Hinge Side 1-3/8"W x 46"H	1
c	FAST-S355A	Screw ¼-14 x ⅝" Sheet Metal Torx-T27 w/Pin SS	12

NOTE: Torx bits are not included but can be ordered separately.

No-Site Strips, Inswing Latch Side

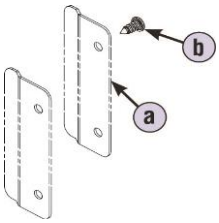

*** HDWC-S0422** — List Price $ 33.00

Includes:

	Part No.	Description	Qty.
a	HDWC-S0419	No-Site Strip, Latch Side 1-5/8"W x 25"H	2
b	FAST-S355A	Screw ¼-14 x ⅝" Sheet Metal Torx-T27 w/Pin SS	8

Also available in 69" & 72" Heights - HDWC-S0422-69/72 — $ 42.00

NOTE: Torx bits are not included but can be ordered separately.

No-Site Strips, Outswing Latch and Hinge Sides

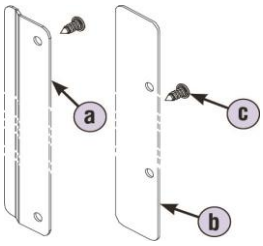

*** HDWC-S0424** — List Price $ 44.00

Includes:

	Part No.	Description	Qty.
a	HDWC-S0420	No-Site Strip, Hinge Side 1-3/8"W x 46"H	1
b	HDWC-S0423	No-Site Strip, Latch Side 1-5/8"W x 57"H	1
c	FAST-S355A	Screw ¼-14 x ⅝" Sheet Metal Torx-T27 w/Pin SS	10

NOTE: Torx bits are not included but can be ordered separately.

Additional Kits

All Parts marked with " * " are for the original phenolic design discontinued in July 2021. These parts are not compatible with the No-Site™ design.
Please contact Bradley Customer Service if you need assistance.

No-Site Strips, Outswing Latch Side

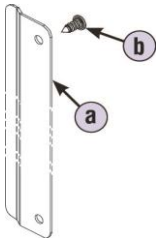

* HDWC-S0425				List Price
Includes:				$ 28.00
	Part No.	Description	Qty.	
a	HDWC-S0423	No-Site Strip, Latch Side 1-5/8"W x 57"H	1	
b	FAST-S355A	Screw ¼-14 x ⅝" Sheet Metal Torx-T27 w/Pin SS	5	
Also available in 69" & 72" Heights - HDWC-S0425-69/72				$ 37.00

NOTE: Torx bits are not included but can be ordered separately.

Top and Bottom Hinge Kit (LHI/RHO)

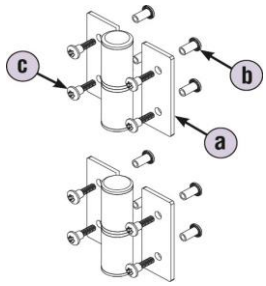

* HDWC-S0278				List Price
Includes:				$ 81.00
	Part No.	Description	Qty.	
a	HDWC-S0211	Surface-Mounted Hinge (LHI/RHO)	1	
b	FAST-S0017	Screw #10-24 x ½" BTN Barrel-Female w/Pin SS	8	
c	FAST-P004	Screw #10-24 x ¾" BTN Step-Male Torx-T27	8	

NOTE: Torx bits are not included but can be ordered separately.

Top and Bottom Hinge Kit (RHI/LHO)

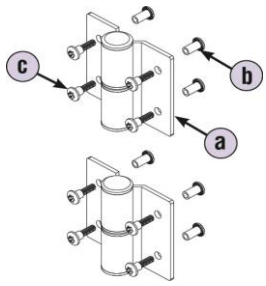

* HDWC-S0279				List Price
Includes:				$ 81.00
	Part No.	Description	Qty.	
a	HDWC-S0212	Surface-Mounted Hinge (RHI/LHO)	1	
b	FAST-S0017	Screw #10-24 x ½" BTN Barrel-Female w/Pin SS	8	
c	FAST-P004	Screw #10-24 x ¾" BTN Step-Male Torx-T27	8	

NOTE: Torx bits are not included but can be ordered separately.

Slide Latch Inswing/Outswing Kit

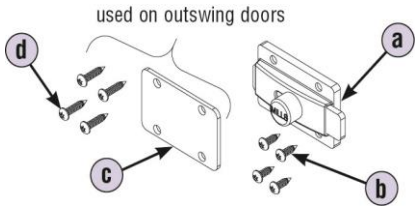

* HDWC-S0109				List Price
Includes:				$ 33.00
	Part No.	Description	Qty.	
a	HDWL-S160	Slide Latch	1	
b	FAST-S0019	Screw #10 x ⅝" BTN Sheet Metal Torx-T25 w/Pin SS	4	
c	HDWL-P0036	Spacer	1	
d	FAST-S0028	Screw #10-24 x 1" Sheet Metal Torx-T27 SS	4	

NOTE: Torx bits are not included but can be ordered separately.

Additional Kits

All Parts marked with " * " are for the original phenolic design discontinued in July 2021. These parts are not compatible with the No-Site™ design.
Please contact Bradley Customer Service if you need assistance.

Door Pull Kit — *** HDWC-S0110** — **List Price** $ 49.00

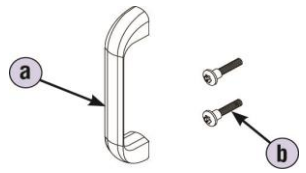

Includes:

	Part No.	Description	Qty.
a	HDWT-S282	Door Pull	1
b	FAST-P004A	Screw #10-24 x 1" Shoulder Torx-T27	2

NOTE: Torx bits are not included but can be ordered separately.

Door Pull with Countersink Kit — *** HDW0-S0168** — **List Price** $ 30.00

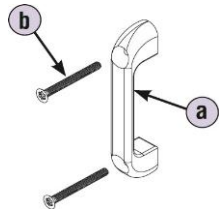

Includes:

	Part No.	Description	Qty.
a	HDW0-S0167	Door Pull with Countersink SS	1
b	FAST-S0027	Screw #10-24 x 2" Flat Machine Torx SS	2

NOTE: Torx bits are not included but can be ordered separately.

Coat Hook Inswing Kit — **HDWC-S0011** — **List Price** $ 16.00

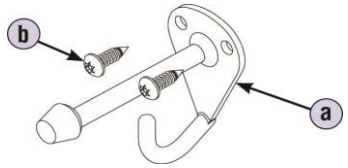

Includes:

	Part No.	Description	Qty.
a	HDWT-S285	Coat Hook with Bumper	1
b	FAST-S0019	Screw #10 x ⅝" BTN Sheet Metal Torx-T25 w/Pin SS	2

NOTE: Torx bits are not included but can be ordered separately.

Coat Hook Outswing Kit — **HDWC-S0013** — **List Price** $ 13.00

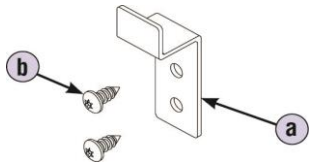

Includes:

	Part No.	Description	Qty.
a	HDWT-S275	Coat Hook, Outswing	1
b	FAST-S0016	Screw #14 x ⅝" Sheet Metal Torx-T27 SS	2

NOTE: Torx bits are not included but can be ordered separately.

Wall Bumper Kit — **HDWC-S283** — **List Price** $ 30.00

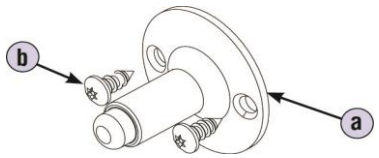

Includes:

	Part No.	Description	Qty.
a	HDWT-S177	Wall Bumper	1
b	FAST-S0019	Screw #10 x ⅝" BTN Sheet Metal Torx-T25 w/Pin SS	2

NOTE: Torx bits are not included but can be ordered separately.

Strike/Keeper Inswing Kit — **HDWC-S0050 X** — **List Price** $ 30.00

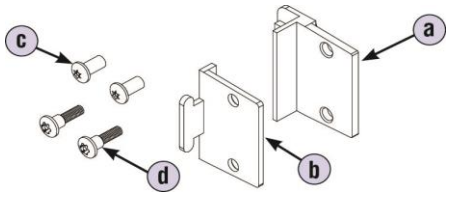

Includes:

	Part No.	Description	Qty.
a	HDWC-S919	Door Stop Inswing	1
b	HDWL-S918	Door Keeper	1
c	FAST-P004	Screw #10-24 x ¾" BTN Step-Male Torx-T27	2
d	FAST-S0017	Screw #10-24 x ½" BTN Barrel-Female w/Pin SS	2

NOTE: Torx bits are not included but can be ordered separately.

Additional Kits

All Parts marked with " * are for the original phenolic design discontinued in July 2021. These parts are not compatible with the No-Site™ design.
Please contact Bradley Customer Service if you need assistance.

Strike/Keeper Flat Inswing Kit

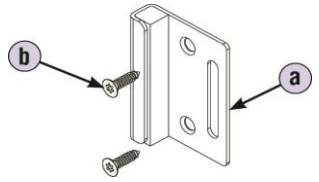

*** HDWC-S0030** — List Price $ 57.00

Includes:

	Part No.	Description	Qty.
a	HDWC-S0029	Flat Door Stop/Keeper	1
b	FAST-S0006	Screw #10 x ¾" FL Sheet Metal Torx-T25	2

NOTE: Torx bits are not included but can be ordered separately.

Strike/Keeper Outswing Kit

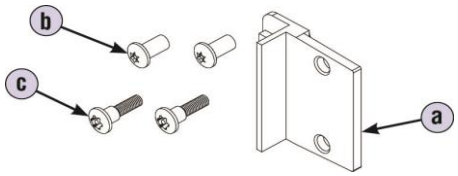

*** HDWC-S0052** — List Price $ 32.00

Includes:

	Part No.	Description	Qty.
a	HDWC-S919	Door Stop Inswing	1
b	FAST-S0017	Screw #10-24 x ½" BTN Barrel-Female w/Pin SS	2
c	FAST-P004	Screw #10-24 x ¾" BTN Step-Male Torx-T27	2

NOTE: Torx bits are not included but can be ordered separately.

Strike/Keeper Flat Outswing Kit

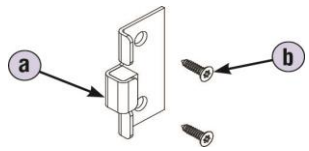

*** HDWC-S0031** — List Price $ 52.00

Includes:

	Part No.	Description	Qty.
a	HDWC-S0022	Flat Door Stop/Keeper	1
b	FAST-S0006	Screw #10 x ¾" FL Sheet Metal Torx-T25	2

NOTE: Torx bits are not included but can be ordered separately.

Continuous Stainless Steel Piano Hinge

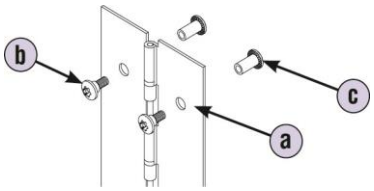

List Price

*** HDWC-S0136 (RHI/LHO)** — $ 137.00

Includes:

	Part No.	Description	Qty.
a	HDWT-S0208	Piano Hinge, Continuous Stainless Steel	1
b	FAST-S0017	Screw #10-24 x ½" BTN Barrel-Female w/Pin SS	12
c	FAST-S0018	Screw #10-24 x ½" Shoulder Torx-T27 SS	12

*** HDWC-S0137 (LHI/RHO)** — $ 137.00

Includes:

	Part No.	Description	Qty.
a	HDWT-S0209	Piano Hinge, Continuous Stainless Steel	1
b	FAST-S0017	Screw #10-24 x ½" BTN Barrel-Female w/Pin SS	12
c	FAST-S0018	Screw #10-24 x ½" Shoulder Torx-T27 SS	12

NOTE: Torx bits are not included but can be ordered separately.

Pilaster Channel Kit

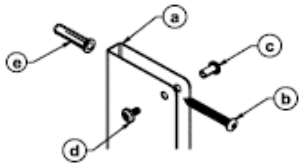

HDWC-S0495 — List Price

Includes:

	Part No.	Description	Qty.
a	C192-02-57	Bracket, "U" Continuous 2" x 57"	1
b	FAST-P002	Screw #14 x 2" BTN Sheet Metal Torx-T27 w/Pin SS	5
c	FAST-S0017	Screw #10-24 x ½" BTN Barrel-Female w/Pin SS	5
d	FAST-S0018	Screw #10-24 x ½" Shoulder Torx-T27 SS	5
e	FAST-T373	Anchor - Plastic #14-16 x 1-3/8" Lg.	5

Also available in 68" & 71" Heights - HDWC-S0495-68/-71 — $ 139.00

NOTE: Torx bits are not included but can be ordered separately.

Additional Kits

Pilaster Channel Kit

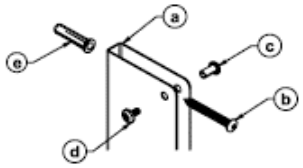

HDWC-S0497				List Price
Includes:				$ 123.00
	Part No.	Description	Qty.	
a	C192-03-57	Bracket, "U" Continuous 3" x 57"	1	
b	FAST-P002	Screw #14 x 2" BTN Sheet Metal Torx-T27 w/Pin SS	5	
c	FAST-S0017	Screw #10-24 x ½" BTN Barrel-Female w/Pin SS	5	
d	FAST-S0018	Screw #10-24 x ½" Shoulder Torx-T27 SS	5	
e	FAST-T373	Anchor - Plastic #14-16 x 1-3/8" Lg.	5	
Also available in 68" & 71" Heights - HDWC-S0497-68/-71				$ 153.00

NOTE: Torx bits are not included but can be ordered separately.

Panel Channel Kit

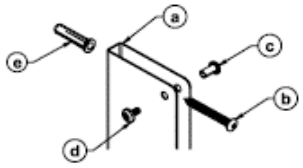

HDWC-S0489				List Price
Includes:				$ 111.00
	Part No.	Description	Qty.	
a	C190-02-57	Bracket, "U" Continuous 2" x 57"	1	
b	FAST-P002	Screw #14 x 2" BTN Sheet Metal Torx-T27 w/Pin SS	5	
c	FAST-S0015	Screw #10-24 x 3/8" Machine Torx-T27 SS	5	
d	FAST-S0017	Screw #10-24 x ½" BTN Barrel-Female w/Pin SS	5	
e	FAST-T373	Anchor - Plastic #14-16 x 1-3/8" Lg.	5	
Also available in 68" & 71" Heights - HDWC-S0489-68/-71				$ 139.00

NOTE: Torx bits are not included but can be ordered separately.

Panel Channel Kit

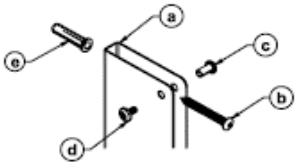

HDWC-S0491				List Price
Includes:				$ 123.00
	Part No.	Description	Qty.	
a	C190-03-57	Bracket, "U" Continuous 3" x 57"	1	
b	FAST-P002	Screw #14 x 2" BTN Sheet Metal Torx-T27 w/Pin SS	5	
c	FAST-S0015	Screw #10-24 x 3/8" Machine Torx-T27 SS	5	
d	FAST-S0017	Screw #10-24 x ½" BTN Barrel-Female w/Pin SS	5	
e	FAST-T373	Anchor - Plastic #14-16 x 1-3/8" Lg.	5	
Also available in 68" & 71" Heights - HDWC-S0491-68/-71				$ 153.00

NOTE: Torx bits are not included but can be ordered separately.

Torx Bits

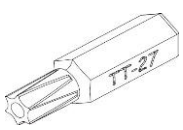

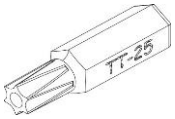

	Part No.	Description	Qty.	List Price
	HW101031	Torx Bit T27	1	$ 6.00
	HW101030	Torx Bit T25	1	$ 6.00

Curtain Hook for Headrail

HDWP-COMHK	List Price
	$ 2.00

Continuous "H" Bracket

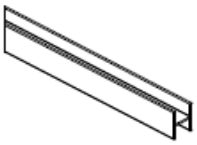

	Part No.	Description	Qty.	List Price
	HDWC-A0545-080	Bracket H Continuous 1/2 X 80" Alum	1	$ 33.00