KOHLER. Faucets

Components®

deck-mount bath spout with Row design

K-77987

Features

- Nondiverter spout
- 8" (203 mm) spout reach
- For use with Components™ Lever, Oyl, or Industrial faucet handles (sold separately)
- Coordinates with Components faucets, accessories, and showering components to complete your bathroom

Material

- Premium metal construction for durability and reliability
- KOHLER finishes resist corrosion and tarnishing

Installation

- Deck-mount

Required Products/Accessories

K-77990-4 deck-mount bath faucet handles with valve

or

K-77990-8 deck-mount bath faucet handles with valve

or

K-77990-9 deck-mount bath faucet handles with valve

Recommended Products/Accessories

K-23723 Faucet cleaner
K-78372 18" Towel Bar
K-78373 24" Towel Bar
K-78375 24" Double Towel Bar
K-78377 Hand Towel Arm
K-78378 Robe Hook
K-78379 Double Towel Arm
K-78382 Pivoting toilet paper holder
K-78383 Vertical toilet paper holder
K-78384 Covered double toilet paper holder

Codes/Standards

ASME A112.18.1/CSA B125.1

KOHLER® Faucet Lifetime Limited Warranty

See website for detailed warranty information.

Available Colors/Finishes

Color tiles intended for reference only.

Color	Code	Description
	CP	Polished Chrome
	SN	Vibrant® Polished Nickel
	AF	Vibrant® French Gold
	BN	Vibrant® Brushed Nickel
	BV	Vibrant® Brushed Bronze
	BL	Matte Black
	2MB	Vibrant® Brushed Moderne Brass
	TT	Vibrant Titanium

KOHLER Faucets

Components®

deck-mount bath spout with Row design

K-77987

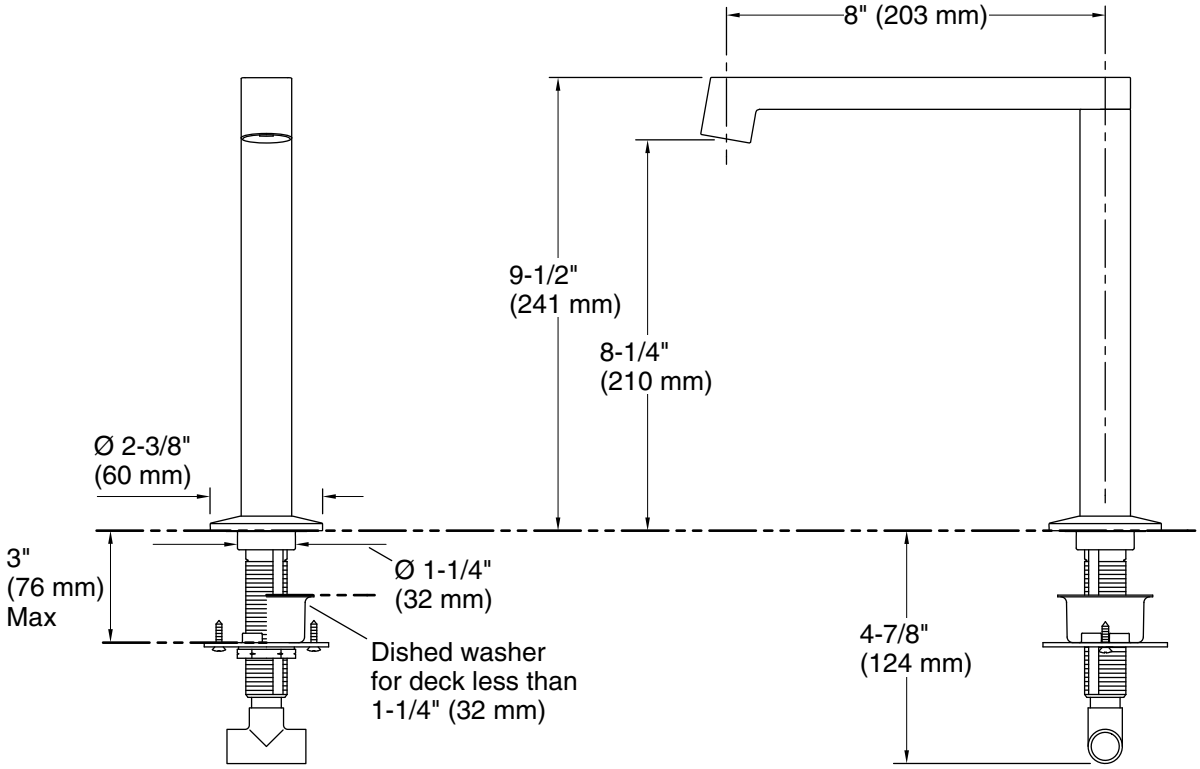

Technical Information

All product dimensions are nominal.

Drain included: No

Spout:

Spout reach: 8" (203 mm)

Notes

Install this product according to the installation instructions.

WARNING: Risk of personal injury. Do not install the bath faucet in an area where it may inadvertently be used for support by the bather.