Gilford™
Sink Rack
K-6002

Features
- Fits in the bowl of the K-12700 Gilford kitchen sink
- Helps protect sink surface from daily wear
- Dishwasher-safe
- Padded feet provide cushioning

Material
- Durable stainless steel construction

Recommended Products/Accessories
K-12700 30" top-/wall-mount single-bowl farmhouse kitchen sink
K-23723 Faucet cleaner

Codes/Standards
None Applicable

KOHLER® One-Year Limited Warranty
See website for detailed warranty information.

Available Colors/Finishes
Color tiles intended for reference only.

Color	Code	Description
	ST	Stainless Steel

KOHLER®

Gilford™
Sink Rack
K-6002

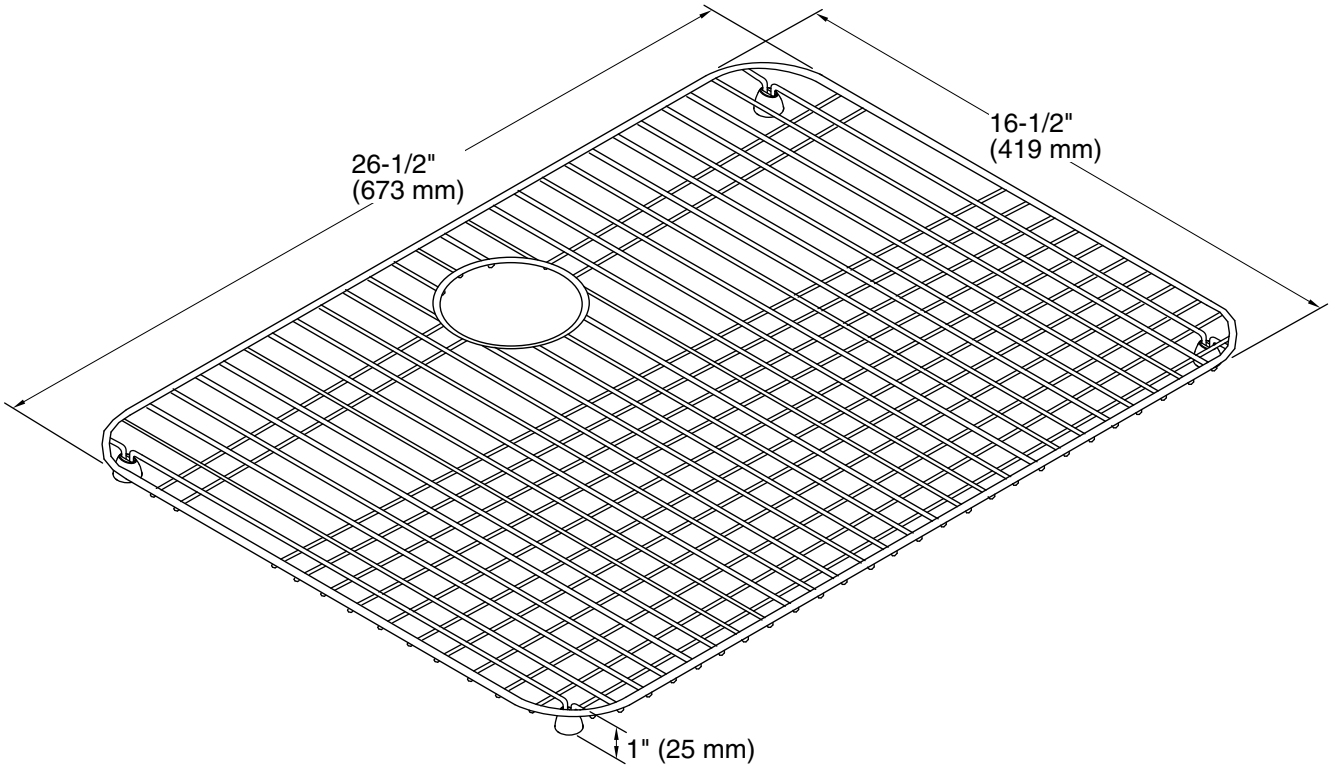

Technical Information
All product dimensions are nominal.

Material: Steel