Prices effective February 3, 2025

Published March 2025

Canvas Office Landscape® Dock

Introduction	**page 2**
Canvas Office Landscape Dock	**3**
Infrastructure	5
Energy Distribution	23
Work Surfaces	46
Supports and Hardware	63
Cable Management	81
Storage	87
Screens	97
Indices	**163**
By Name	163
By Number	165
Appendices	
20-Day or Less/Assigned Lead-Time Order Information	
Stain-to-Match Program	
Customer's Own Material Order Information-Workspaces	
Textiles Application Chart-Workspaces	
Textile Colors	

For the latest materials information, refer to the Materials pages on HermanMiller.com.

A Note on the Organization of This Book

There are a few signals that will help you understand the organization of this book. Once you know them, you should be able to find your way around easily.

Like a newspaper, this book is formatted with columns of text and illustrations that run vertically.

Information wraps from one column to the next and continues for as many pages as it needs to.

Black bars are clues.

A black bar at the top of a page signals the start of information about a product.

This information is divided into two sections, each signaled by a black bar. Product Information includes a description, additional notes, and dimensional drawings. Specification Information, which always begins at the top of a column, includes a series of steps. Each step represents a decision you need to make in order to complete your product number. Steps must be followed sequentially. The number of pages needed to complete information on a product varies; some will be complete in one page; others may fill three or four pages. Just continue going through the steps until you run into the next product, signaled by the black bar at the top of the page.

Black tabs running along the outside edge of the page help you locate what section you are in or what section you want to go to. You can thumb forwards or backwards to find a section; tabs and text appear on both sides of the page.

The additional pages in the back of the book include the appendices and indices. They are signaled by a long black bar running along the outside edge of the page.

The index is presented two ways.

The first index is in alphabetical order by product name. It can be helpful if you are new to the products and numbering scheme or if you are looking for a type of product, such as work chair or round table.

The second index is by product number. It lists, in alphanumeric order, the base product number, typically a five-digit number.

General Information

This book is effective February 3, 2025, subject to change without notice. Products may be purchased from authorized Herman Miller dealers who will quote prices upon request. For more information about our products and services or to see a list of dealers, visit www.HermanMiller.com.

All prices are list prices. Additional services, such as planning services, design, storage, and installation, are not included and must be added to these prices when the additional services are requested.

Illustrations, specifications, and prices are based on the latest information at the time of publication. The right is reserved to make changes at any time without notice in prices, fabrics, finishes, materials, specifications, and models, and also to discontinue models and finishes.

Dimensions shown in the drawings are engineering drawing dimensions rounded up to the nearest 1/8". Product is shipped set up or knocked down. Products that include "Shipped knocked down" in the description require some assembly. If this statement does not appear in the description, the product is shipped assembled.

Service problems are normally handled by a Herman Miller authorized dealer. Where this cannot be accomplished on a local level, service problems should be referred to the Customer Care Representative for your region, Herman Miller, Inc., Zeeland, Michigan 49464.

20-Day or Less/Assigned Lead-Time Shipments

All products and options in this price book not designated by an Assigned Program icon A will ship in **20 business days or less** after being acknowledged by Herman Miller.

Products and options designated by an A are on the assigned lead- time program and may ship in 20 days, less than 20 days, or more than 20 days from order acknowledgement.

Infrastructure

Energy Distribution

Work Surfaces

Supports and Hardware

Cable Management

Storage

Screens

Dock Structure FD110.

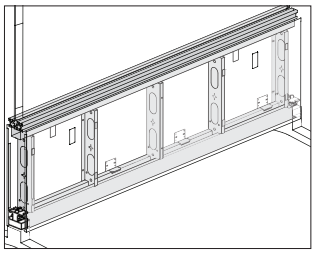

Product Information

Description

This structural steel wall defines space and channels power and data to the user. Includes 18⅛″-high frame and top rail. Top rail finish is clear anodized aluminum.

Notes

When finished with cladding, dock structure is 3″ thick.

Dock is raised 4″ from the floor.

Power can enter from bottom opening using floor power entry (FD144.) or from end of dock with ceiling power entry (FD142.), ordered separately.

Order the following products separately:

- Lower cladding (FD170.)
- Dock foot (FD117.)
- Dock foot, structural (FD119.)
- Dock-to-dock connector (FD128.)
- Dock power harness (FD151.)
- Finished end, architectural, dock (FD16A.)

Dimensions

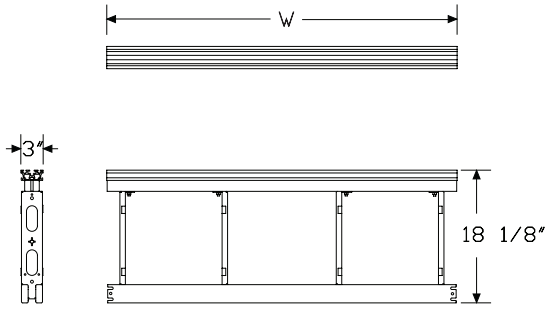

Specification Information

Step 1.

FD110. A

Step 2. Width

42	42″ wide
48	48″ wide
60	60″ wide
72	72″ wide
84	84″ wide
96	96″ wide

Prices for Steps 1-2.

FD110.	**42**	$992
	48	$1079
	60	$1217
	72	$1349
	84	$1484
	96	$1617

Step 3. Top Rail Finish

AN	clear anodized aluminum	+$0

Dock Foot, Structural (Support Foot) FD119.

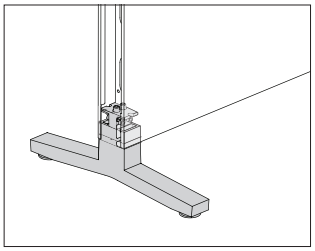

Product Information

Description

This painted metal individual structural foot supports 1 end of a dock or the attachment point of 2 adjacent docks, and can support a dock wall run. It adjusts up to 1½″ for leveling. Attachment hardware included.

Notes

This foot is used in place of the dock foot (FD117.).

Order service kit (U1BDWGL) for additional leveling spacers.

See planning guide for length of run and proper support information.

Dimensions

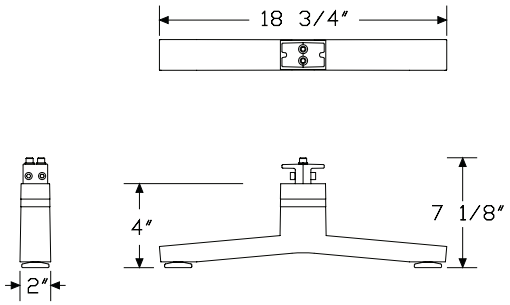

Specification Information

Step 1.

FD119. A		$386

Step 2. Surface Finish

Sand Texture Paint		
UBK	ultra black (CP) A	+$0
8Q	folkstone grey (CP)	+$0
91	white (CP)	+$0
98	studio white (CP)	+$0
BK	black	+$0
CL	cool grey neutral	+$0
G1	graphite (CP)	+$0
WL	warm stone (CP)	+$0
WN	warm grey neutral	+$0
Metallic Paint		
611	beige mist metallic (CP) A	+$0
613	silver (CP) A	+$0
EH	metallic bronze	+$0
SNA	satin aluminum	+$30
SNB	satin bronze	+$30
SNC	satin carbon	+$30

Dock Foot FD117.

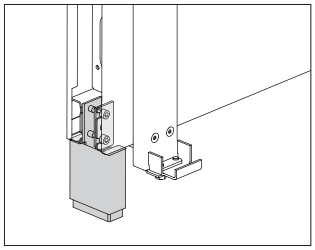

Product Information

Description

This painted metal individual foot attaches at 1 end of a dock or at the attachment point of 2 adjacent docks. It adjusts up to 2″ for leveling. Attachment hardware included.

Notes

Specify configuration (1A) for end-of-dock applications.

Specify shared configuration (1B) for use where 2 docks come together.

See planning guide for length of run and proper support information.

Dimensions

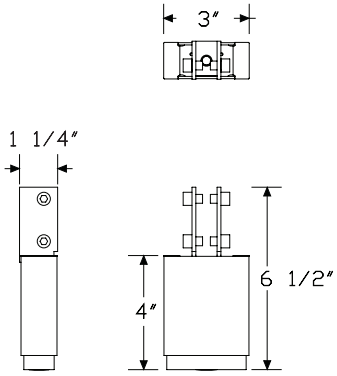

Specification Information

Step 1.

FD117. A

Step 2. Configuration

1A	end-of-dock
1B	shared

Prices for Steps 1-2.

FD117.	**1A**	$185
	1B	$189

Step 3. Surface Finish

Finish

3G	brownstone	+$0

Sand Texture Paint

UBK	ultra black (CP) A	+$0
8Q	folkstone grey (CP)	+$0
91	white (CP)	+$0
98	studio white (CP)	+$0
BK	black	+$0
CL	cool grey neutral	+$0
G1	graphite (CP)	+$0
WL	warm stone (CP)	+$0
WN	warm grey neutral	+$0

Metallic Paint

611	beige mist metallic (CP) A	+$0
613	silver (CP) A	+$0
EH	metallic bronze	+$0
SNA	satin aluminum	+$10
SNB	satin bronze	+$10
SNC	satin carbon	+$10

Dock-to-Dock Connector FD128.

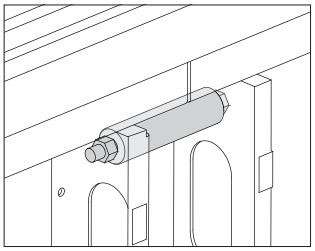

Product Information

Description

This connecting hardware joins 2 docks together in-line.

Notes

Requires 1 dock foot (FD117.1B) or 1 structural foot (FD119.), ordered separately.

Dimensions

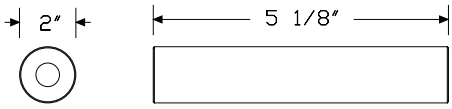

Specification Information

Step 1.

FD128. A

Step 2. Configuration

1 in-line connection

Prices for Steps 1-2.

FD128. 1	$63

Low Storage to Dock Bracket FD292.

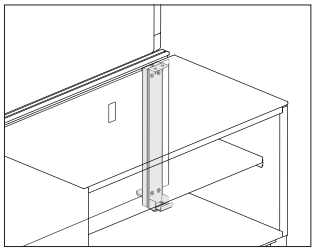

Product Information

Description

This bracket attaches a Canvas wood or metal low credenza with 4″ foot and thin top and provides structural support to the dock wall run. It allows the credenza unit to be positioned parallel or perpendicular to the dock. Includes 1 bracket and attachment hardware.

Notes

For use with low credenza with 4″ foot and thin top.

Bracket attaches with a 1″ cable management gap.

2 brackets required for each credenza unit.

For information about properly supporting the dock, see Canvas Dock planning guide. See Canvas Office Landscape® planning guide for specific surface support guidelines when using the Canvas low credenza.

Dimensions

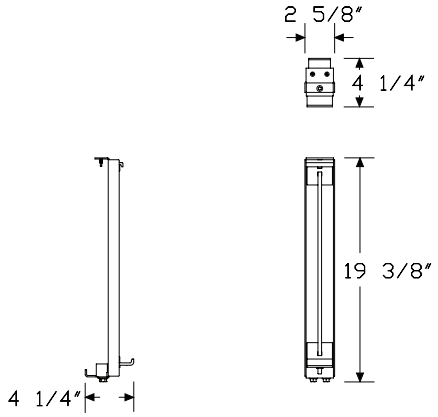

Specification Information

Step 1.

FD292. A

Step 2. Storage Type

M	for use with metal low credenza with 4″ high foot
W	for use with wood low credenza with 4″ high foot

Step 3. Storage Attachment Position

G	1″ gap, for cord drop

Prices for Steps 1-3.

		G
FD292.	**M**	$198
	W	$198

Step 4. Surface Finish

613	silver (CP) A	+$0

Low Storage to Dock Spacer FD293.

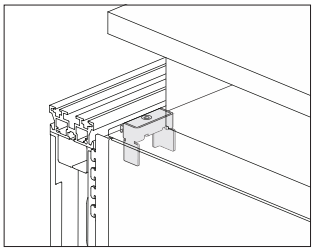

Product Information

Description

This spacer attaches a Canvas wood or metal low credenza with 4″ foot and thin top to the dock. It creates a uniform 1″ cable management gap between the dock and credenza when the low storage to dock bracket is being used to support a dock wall run. Includes 1 spacer.

Notes

2 spacers required for each low credenza.

Spacer does not provide structural support to the dock wall.

For information about properly supporting the dock, see Canvas Dock planning guide. See Canvas Office Landscape® planning guide for specific surface support guidelines when using the Canvas low credenza.

Dimensions

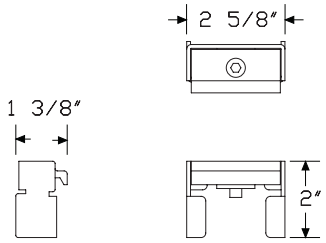

Specification Information

Step 1.

FD293. A

Step 2. Storage Attachment Position

G 1″ gap, for cord drop

Prices for Steps 1-2.

FD293. G	$39

Step 3. Surface Finish

613	silver (CP) A	+$0

Finished End, Architectural, Dock FD16A.

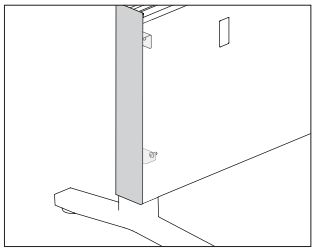

Product Information

Description

This 18¼″-high painted metal cover finishes 1 end of a single dock. Attachment hardware included.

Dimensions

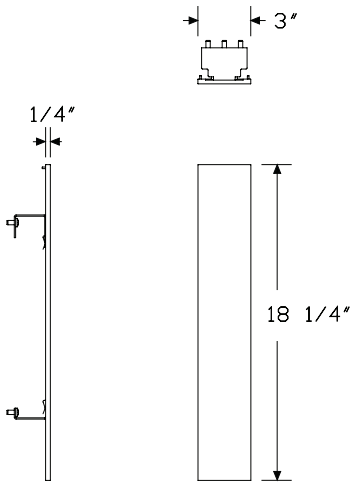

Specification Information

Step 1.

FD16A. A

Step 2. Height

22	22″ high

Step 3. Surface Material

P	painted

Prices for Steps 1-3.

		P
FD16A. 22		$276

Step 4. Surface Finish

Metallic Paint

611	beige mist metallic (CP) A	+$0
613	silver (CP) A	+$0
EH	metallic bronze	+$0
SNA	satin aluminum	+$10
SNB	satin bronze	+$10
SNC	satin carbon	+$10

Sand Texture Paint

UBK	ultra black (CP) A	+$0
8Q	folkstone grey (CP)	+$0
91	white (CP)	+$0
98	studio white (CP)	+$0
BK	black	+$0
CL	cool grey neutral	+$0
G1	graphite (CP)	+$0
WL	warm stone (CP)	+$0
WN	warm grey neutral	+$0

Gallery Panel, Dock Attached FD113.

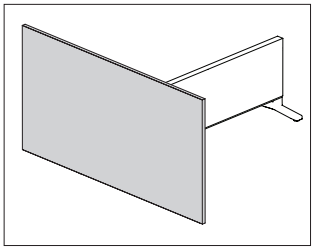

Product Information

Description

This structural panel stands on the floor and attaches to a dock to provide end of run support and privacy. It is 1¼″ thick and has a laminate surface with thermoplastic edge, laminate surface with a thermoplastic backed plywood edge, or veneer surface and edge. Leveling glides and attachment hardware included.

Notes

Gallery panels 24″-72″ wide are a single panel construction for non-directional laminates and all veneers; 78″-144″ wide are multi-panel (3 pieces) construction for veneers.

Gallery panels 24″-54″ wide are a single-panel construction for directional laminates; 60″-144″ wide are multi-panel construction for directional laminates.

Attachment direction is determined by facing the gallery panel from outside the workstation. Left attachment (L) connects the left side of a gallery panel to the end of a dock. Right attachment (R) connects the right side of a gallery panel to the end of a dock. Mid attachment (M) connects the middle of a gallery panel to the end of a dock.

Gallery panels are 3″ wider than nominal dimensions.

Gallery panels 66″ wide and wider require attachment to adjacent surfaces; hardware is included.

Leveling glides provide 2″ of adjustment.

Grain direction is vertical.

Dimensions

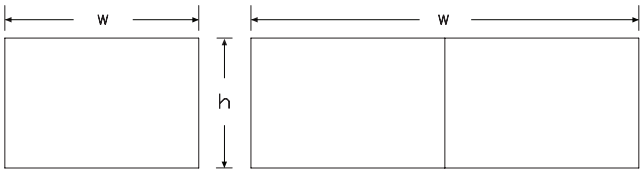

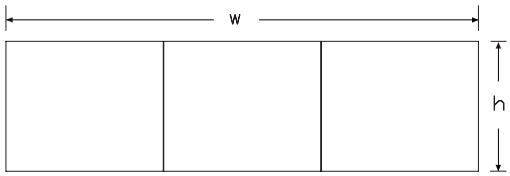

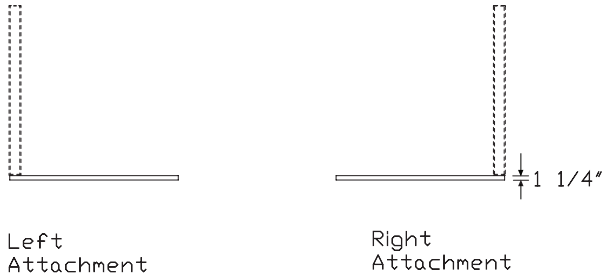

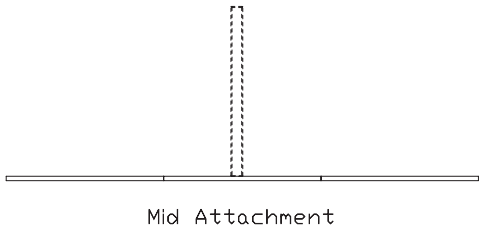

Specification Information

Step 1.

FD113. A

Step 2. Height

22	22″ high
29	29″ high
42	42″ high
46	46″ high
53	53″ high A
57	57″ high A

Step 3. Width

24	24″ wide
30	30″ wide
36	36″ wide
42	42″ wide
48	48″ wide
54	54″ wide A
60	60″ wide
66	66″ wide A
72	72″ wide
78	78″ wide A
84	84″ wide
90	90″ wide A
96	96″ wide
120	120″ wide
144	144″ wide

Step 4. Surface Material

L	high-pressure laminate/thermoplastic edge
W	veneer A
U	high - pressure laminate/universal edge

Step 5. Attachment Method

For 24″ wide (24), 30″ wide (30), 36″ wide (36), or 42″ wide (42)

L	left attachment
R	right attachment

For 48″ wide (48), 54″ wide (54), 60″ wide (60), 66″ wide (66), or 72″ wide (72)

L	left attachment
M	mid attachment
R	right attachment

For 78″ wide (78), 84″ wide (84), 90″ wide (90), 96″ wide (96), 120″ wide (120), or 144″ wide (144)

M	mid attachment

Prices for Steps 1-5.

			LL	LM	LR	WL	WM	WR
FD113.	**22**	**24**	$422	—	422	893	—	893
		30	$498	—	498	1229	—	1229
		36	$575	—	575	1397	—	1397
		42	$690	—	690	1649	—	1649
		48	$805	805	805	1899	1899	1899
		54	$886	886	886	2089	2089	2089
		60	$986	986	986	2302	2234	2302
		66	$1053	1053	1053	2457	2457	2457
		72	$1143	1143	1143	2648	2570	2648
		78	—	$1276	—	—	2927	—
		84	—	$1403	—	—	3220	—
		90	—	$1544	—	—	3542	—
		96	—	$1698	—	—	3896	—
		120	—	$1868	—	—	4286	—
		144	—	$2054	—	—	4714	—
	29	**24**	$501	—	501	1010	—	1010
		30	$615	—	615	1342	—	1342
		36	$690	—	690	1511	—	1511
		42	$806	—	806	1762	—	1762
		48	$917	917	917	2015	2015	2015
		54	$1009	1009	1009	2217	2217	2217
		60	$1105	1105	1105	2420	2420	2420
		66	$1179	1179	1179	2584	2584	2584
		72	$1261	1261	1261	2763	2763	2763
		78	—	$1346	—	—	2951	—
		84	—	$1759	—	—	3616	—
		90	—	$1900	—	—	3906	—
		96	—	$1921	—	—	3982	—
		120	—	$2142	—	—	4701	—
		144	—	$2468	—	—	5425	—

42	**24**	$754	—	754	1653	—	1653
	30	$920	—	920	2020	—	2020
	36	$1003	—	1003	2204	—	2204
	42	$1128	—	1128	2475	—	2475
	48	$1254	1254	1254	2751	2751	2751
	54	$1380	1380	1380	3027	3027	3027
	60	$1465	1465	1465	3209	3209	3209
	66	$1565	1565	1565	3427	3427	3427
	72	$1634	1634	1634	3587	3587	3587
	78	—	$1745	—	—	3831	—
	84	—	$2277	—	—	4747	—
	90	—	$2391	—	—	4985	—
	96	—	$2452	—	—	5140	—
	120	—	$2699	—	—	5932	—
	144	—	$3057	—	—	6723	—
46	**24**	$802	—	802	1758	—	1758
	30	$960	—	960	2109	—	2109
	36	$1040	—	1040	2283	—	2283
	42	$1162	—	1162	2544	—	2544
	48	$1281	1281	1281	2807	2807	2807
	54	$1410	1410	1410	3088	3088	3088
	60	$1485	1485	1485	3254	3254	3254
	66	$1586	1586	1586	3485	3475	3475
	72	$1646	1646	1646	3615	3615	3615
	78	—	$1758	—	—	3860	—
	84	—	$2347	—	—	4921	—
	90	—	$2465	—	—	5167	—
	96	—	$2516	—	—	5299	—
	120	—	$2757	—	—	6057	—
	144	—	$3100	—	—	6815	—
53	**24**	$749	—	749	1748	—	1748
	30	$895	—	895	2096	—	2096
	36	$992	—	992	2270	—	2270
	42	$1084	—	1084	2529	—	2529
	48	$1194	1194	1194	2790	2790	2790
	54	$1366	1366	1366	3125	3125	3125
	60	$1432	1432	1432	3140	3140	3140
	66	$1578	1578	1578	3454	3454	3454
	72	$1591	1591	1591	3487	3487	3487
	78	—	$2146	—	—	3836	—
	84	—	$2335	—	—	4890	—
	90	—	$2498	—	—	5233	—
	96	—	$2503	—	—	5266	—
	120	—	$2741	—	—	6019	—
	144	—	$3084	—	—	6771	—
57	**24**	$785	—	785	1957	—	1957
	30	$939	—	939	2347	—	2347
	36	$1045	—	1045	2541	—	2541
	42	$1137	—	1137	2832	—	2832
	48	$1256	1256	1256	3125	3125	3125
	54	$1432	1432	1432	3500	3500	3500
	60	$1256	1507	1507	3517	3517	3517
	66	$1657	1657	1657	3868	3868	3868
	72	$1670	1670	1670	3905	3905	3905
	78	—	$2256	—	—	4296	—
	84	—	$2450	—	—	5477	—
	90	—	$2622	—	—	5861	—
	96	—	$2626	—	—	5897	—
	120	—	$2877	—	—	6742	—
	144	—	$3238	—	—	7583	—

		UL	UM	UR
FD113. 22	**24**	$422	—	422
	30	$498	—	498
	36	$575	—	575
	42	$690	—	690
	48	$805	805	805
	54	$886	886	886
	60	$986	986	986
	66	$1053	1053	1053
	72	$1143	1143	1143
	78	—	$1276	—
	84	—	$1403	—
	90	—	$1544	—
	96	—	$1698	—
	120	—	$1868	—
	144	—	$2054	—
29	**24**	$501	—	501
	30	$615	—	615
	36	$690	—	690
	42	$806	—	806
	48	$917	917	917
	54	$1009	1009	1009
	60	$1105	1105	1105
	66	$1179	1179	1179
	72	$1261	1261	1261
	78	—	$1346	—
	84	—	$1759	—
	90	—	$1900	—
	96	—	$1921	—
	120	—	$2142	—
	144	—	$2468	—

42	**24**	$754	—	754
	30	$920	—	920
	36	$1003	—	1003
	42	$1128	—	1128
	48	$1254	1254	1254
	54	$1380	1380	1380
	60	$1465	1465	1465
	66	$1565	1565	1565
	72	$1634	1634	1634
	78	—	$1745	—
	84	—	$2161	—
	90	—	$2270	—
	96	—	$2342	—
	120	—	$2699	—
	144	—	$3057	—
46	**24**	$802	—	802
	30	$960	—	960
	36	$1040	—	1040
	42	$1162	—	1162
	48	$1281	1281	1281
	54	$1410	1410	1410
	60	$1485	1485	1485
	66	$1586	1586	1586
	72	$1646	1646	1646
	78	—	$1758	—
	84	—	$2347	—
	90	—	$2465	—
	96	—	$2516	—
	120	—	$2757	—
	144	—	$3100	—
53	**24**	$749	—	749
	30	$895	—	895
	36	$992	—	992
	42	$1084	—	1084
	48	$1194	1194	1194
	54	$1366	1366	1366
	60	$1432	1432	1432
	66	$1578	1578	1578
	72	$1591	1591	1591
	78	—	$2146	—
	84	—	$2335	—
	90	—	$2498	—
	96	—	$2503	—
	120	—	$2741	—
	144	—	$3084	—

57	**24**	$785	—	785
	30	$939	—	939
	36	$1045	—	1045
	42	$1137	—	1137
	48	$1256	1256	1256
	54	$1432	1432	1432
	60	$1507	1507	1507
	66	$1657	1657	1657
	72	$1670	1670	1670
	78	—	$2256	—
	84	—	$2450	—
	90	—	$2622	—
	96	—	$2626	—
	120	—	$2877	—
	144	—	$3238	—

Step 6.

Surface Finish

For high-pressure laminate/thermoplastic edge (L) or high - pressure laminate/universal edge (U)

125	natural maple (CP) A	+$0
126	natural cherry (CP) A	+$0
127	walnut (CP) A	+$0
139	light ash (CP) A	+$0
140	warm ash (CP) A	+$0
UBK	ultra black (CP) A	+$0
76	light brown walnut	+$0
8Q	folkstone grey (CP)	+$0
91	white (CP)	+$0
98	studio white (CP)	+$0
CL	cool grey neutral	+$0
HF	inner tone light	+$0
HP	light anigre	+$0
LBA	clear on ash (CP)	+$0
LBR	phantom ecru	+$0
LBS	phantom cocoa	+$0
LBU	medium matte walnut (CP)	+$0
LBV	warm grey teak	+$0
LBB	oak on ash (CP)	+$0
LBC	walnut on ash (CP)	+$0
LBF	neutral twill	+$0
LBJ	graphite twill	+$0
LBQ	white twill	+$0
LT	light tone	+$0
LU	soft white	+$0
WL	warm stone (CP)	+$0
WN	warm grey neutral	+$0
X1	chalk white	+$0

Surface/Edge Finish: Wood Veneer

For veneer (W)

2U	light brown walnut A	+$85
40	dark brown walnut A	+$85
CHD	noble cherry A	+$85
ET	clear on ash A	+$85
EU	oak on ash A	+$85
EV	walnut on ash A	+$85
EW	medium matte walnut A	+$85
UL	natural maple A	+$85
WHN	natural white oak A	+$85

Step 7. Edge Finish

For high-pressure laminate/thermoplastic edge (L)

125	natural maple (CP) A	+$0
126	natural cherry (CP) A	+$0
127	walnut (CP) A	+$0
139	light ash (CP) A	+$0
140	warm ash (CP) A	+$0
G1	graphite (CP) A	+$0
UBK	ultra black (CP) A	+$0
76	light brown walnut	+$0
8Q	folkstone grey (CP)	+$0
91	white (CP)	+$0
98	studio white (CP)	+$0
CL	cool grey neutral	+$0
HF	inner tone light	+$0
HP	light anigre	+$0
LBA	clear on ash (CP)	+$0
LBR	phantom ecru	+$0
LBS	phantom cocoa	+$0
LBU	medium matte walnut (CP)	+$0
LBV	warm grey teak	+$0
LBB	oak on ash (CP)	+$0
LBC	walnut on ash (CP)	+$0
LBF	neutral twill	+$0
LBJ	graphite twill	+$0
LBQ	white twill	+$0
LU	soft white	+$0
WL	warm stone (CP)	+$0
WN	warm grey neutral	+$0

For high - pressure laminate/universal edge (U)

PLY	plywood edge	+$50

Gallery Panel Return FD210.

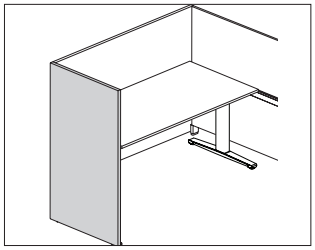

Product Information

Description

This gallery panel return supports a mid-run or end-of-run gallery panel for additional privacy. It is 1¼″ thick and has a laminate surface with thermoplastic edge, laminate surface with a thermoplastic-backed plywood edge, or veneer surface and edge. Attachment hardware included.

Notes

Gallery panel return attaches directly to the end of an end-of-run gallery panel or mid-run gallery panel on the outside edge.

Gallery panels 24″-72″ wide are a single panel construction for non-directional laminates and all veneers.

Gallery panels 24″-48″ wide are a single-panel construction for directional laminates; 60″-72″ wide are multi-panel construction for directional laminates.

Panel heights align with top cap of adjacent frame.

Leveling glides provide 2″ of adjustment.

Attachment direction is determined by facing the gallery panel from outside the workstation. Left attachment (L) connects the left side of a gallery panel to the end of a mid-run or end-of-run gallery panel. Right attachment (R) connects the right side of a gallery panel to the end of a mid-run or end-of-run gallery panel. Mid attachment (M) connects the middle of a gallery panel to the end of a mid-run or end-of-run gallery panel.

Gallery panels are 1.2″ wider than nominal dimensions.

Dimensions

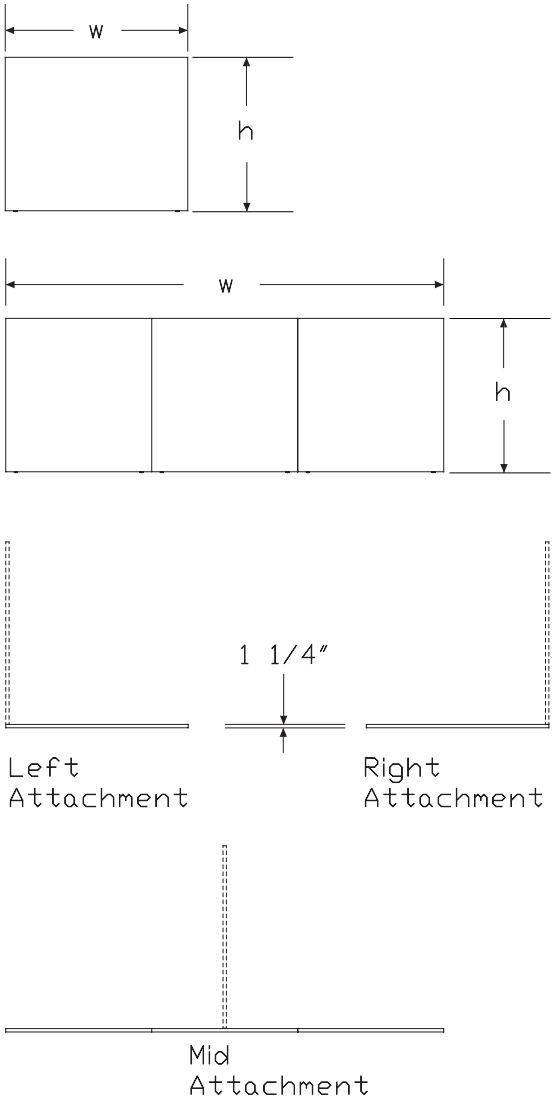

Specification Information

Step 1.

FD210.

Step 2. Height

22	22″ high
29	29″ high
42	42″ high
46	46″ high
53	53″ high
57	57″ high

Step 3. Width

24	24″ wide
30	30″ wide
36	36″ wide
48	48″ wide
60	60″ wide
72	72″ wide

Step 4. Surface Material

L	high-pressure laminate/thermoplastic edge
W	veneer A
U	high - pressure laminate/universal edge

Step 5. Grain Direction

For 24″ wide (24), 30″ wide (30), 36″ wide (36), or 48″ wide (48) with high-pressure laminate/thermoplastic edge (L) or high - pressure laminate/universal edge (U)

VTG	vertical

For 60″ wide (60) or 72″ wide (72) with high-pressure laminate/thermoplastic edge (L) or high - pressure laminate/universal edge (U)

HRG	horizontal
VTG	vertical

For 24″ wide (24), 30″ wide (30), 36″ wide (36), 48″ wide (48), 60″ wide (60), or 72″ wide (72) with veneer (W)

VTG	vertical

Step 6. Attachment Method

For 24″ wide (24), 30″ wide (30), or 36″ wide (36)

L	left attachment
R	right attachment

For 48″ wide (48), 60″ wide (60), or 72″ wide (72)

M	mid attachment

Prices for Steps 1-6.

			LHRGM	LVTGM	LVTGL	LVTGR	WVTGM	WVTGL
FD210.	**22**	**24**	—	—	$422	422	—	850
		30	—	—	$498	498	—	1170
		36	—	—	$575	575	—	1328
		48	—	$805	—	—	1805	—
		60	$957	1130	—	—	2125	—
		72	$1109	1309	—	—	2419	—
	29	**24**	—	—	$529	529	—	960
		30	—	—	$607	607	—	1278
		36	—	—	$684	684	—	1437
		48	—	$908	—	—	1916	—
		60	$1061	1252	—	—	2234	—
		72	$1210	1428	—	—	2554	—
	42	**24**	—	—	$657	657	—	1437
		30	—	—	$802	802	—	1758
		36	—	—	$873	873	—	1916
		48	—	$1090	—	—	2395	—
		60	$1234	1457	—	—	2712	—
		72	$1380	1629	—	—	3181	—
	46	**24**	—	—	$729	729	—	1597
		30	—	—	$873	873	—	1916
		36	—	—	$946	946	—	2076
		48	—	$1163	—	—	2554	—
		60	$1308	1544	—	—	2871	—
		72	$1452	1714	—	—	3191	—
	53	**24**	—	—	$749	749	—	1748
		30	—	—	$895	895	—	2096
		36	—	—	$992	992	—	2270
		48	—	$1194	—	—	2790	—
		60	$1432	1690	—	—	3140	—
		72	$1591	1878	—	—	3487	—
	57	**24**	—	—	$785	785	—	1957
		30	—	—	$939	939	—	2347
		36	—	—	$1045	1045	—	2541
		48	—	$1256	—	—	3124	—
		60	$1507	1779	—	—	3517	—
		72	$1670	1971	—	—	3905	—

		WVTGR	UHRGM	UVTGM	UVTGL	UVTGR
FD210. 22	**24**	$850	—	—	422	422
	30	$1170	—	—	498	498
	36	$1328	—	—	575	575
	48	—	—	$805	—	—
	60	—	$957	1130	—	—
	72	—	$1109	1309	—	—
29	**24**	$960	—	—	529	529
	30	$1278	—	—	607	607
	36	$1437	—	—	684	684
	48	—	—	$908	—	—
	60	—	$1061	1252	—	—
	72	—	$1210	1428	—	—
42	**24**	$1437	—	—	657	657
	30	$1758	—	—	802	802
	36	$1916	—	—	873	873
	48	—	—	$1090	—	—
	60	—	$1234	1457	—	—
	72	—	$1380	1629	—	—
46	**24**	$1597	—	—	729	729
	30	$1916	—	—	873	873
	36	$2076	—	—	946	946
	48	—	—	$1163	—	—
	60	—	$1308	1544	—	—
	72	—	$1452	1714	—	—
53	**24**	$1748	—	—	749	749
	30	$2096	—	—	895	895
	36	$2270	—	—	992	992
	48	—	—	$1194	—	—
	60	—	$1432	1690	—	—
	72	—	$1591	1878	—	—
57	**24**	$1957	—	—	785	785
	30	$2347	—	—	939	939
	36	$2541	—	—	1045	1045
	48	—	—	$1256	—	—
	60	—	$1507	1779	—	—
	72	—	$1670	1971	—	—

Step 7.

Surface Finish

For high-pressure laminate/thermoplastic edge (L) or high - pressure laminate/universal edge (U) with vertical (VTG)

125	natural maple (CP)	+$0
126	natural cherry (CP)	+$0
127	walnut (CP)	+$0
139	light ash (CP)	+$0
140	warm ash (CP)	+$0
76	light brown walnut	+$0
8Q	folkstone grey (CP)	+$0
91	white (CP)	+$0
98	studio white (CP)	+$0
CL	cool grey neutral	+$0
HF	inner tone light	+$0
HP	light anigre	+$0
LBA	clear on ash (CP)	+$0
LBB	oak on ash (CP)	+$0
LBC	walnut on ash (CP)	+$0
LBD	dark brown walnut (non-promote)	+$0
LBF	neutral twill	+$0
LBH	earthen twill (non-promote)	+$0
LBJ	graphite twill	+$0
LBQ	white twill	+$0
LBR	phantom ecru A	+$0
LBS	phantom cocoa A	+$0
LBU	medium matte walnut (CP) A	+$0
LBV	warm grey teak A	+$0
LT	light tone	+$0
LU	soft white	+$0
WL	warm stone (CP)	+$0
WN	warm grey neutral	+$0

Surface Finish

For high-pressure laminate/thermoplastic edge (L) or high - pressure laminate/universal edge (U) with horizontal (HRG)

8Q	folkstone grey (CP)	+$0
91	white (CP)	+$0
98	studio white (CP)	+$0
CL	cool grey neutral	+$0
LU	soft white	+$0
WL	warm stone (CP)	+$0
WN	warm grey neutral	+$0

Surface/Edge Finish

For veneer (W) with vertical (VTG)

2U	light brown walnut	+$85
40	dark brown walnut	+$85
CHD	noble cherry	+$85
EK	medium red walnut (non-promote)	+$85
ET	clear on ash	+$85
EU	oak on ash	+$85
EV	walnut on ash	+$85
EW	medium matte walnut	+$85
UL	natural maple	+$85
UX	Cherry Walnut (non-promote)	+$85

Step 8. Edge Finish

For high-pressure laminate/thermoplastic edge (L)

125	natural maple (CP)	+$0
126	natural cherry (CP)	+$0
127	walnut (CP)	+$0
139	light ash (CP)	+$0
140	warm ash (CP)	+$0
76	light brown walnut	+$0
8Q	folkstone grey (CP)	+$0
91	white (CP)	+$0
98	studio white (CP)	+$0
CL	cool grey neutral	+$0
HF	inner tone light	+$0
HP	light anigre	+$0
LBA	clear on ash (CP)	+$0
LBB	oak on ash (CP)	+$0
LBC	walnut on ash (CP)	+$0
LBD	dark brown walnut (non-promote)	+$0
LBF	neutral twill	+$0
LBH	earthen twill (non-promote)	+$0
LBJ	graphite twill	+$0
LBQ	white twill	+$0
LBR	phantom ecru	+$0
LBS	phantom cocoa	+$0
LBU	medium matte walnut (CP)	+$0
LBV	warm grey teak	+$0
LT	light tone	+$0
LU	soft white	+$0
WL	warm stone (CP)	+$0
WN	warm grey neutral	+$0

For high - pressure laminate/universal edge (U)

PLY	plywood edge	+$50

Lower Cladding FD170.

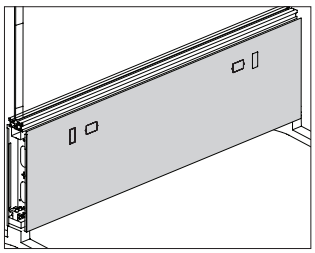

Product Information

Description

This one-piece painted metal cladding finishes 1 side of a dock. It includes cladding and attachment hardware for 1 side of frame. Optional knockouts include 2 data face plate perforated knockouts, 1 for each end of the cladding, and knockouts to route power conduit out of the dock to the underside of a work surface when the undersurface power module is used.

Notes

Can be specified with knockouts (K) for power/data or without knockouts (N).

Knockouts are for NEMA data face plates.

Data face plates are field supplied.

For power access below the surface, specify undersurface power module (FD152.) and cable manager dock to surface (FD199.) separately.

Specify cladding to match width of dock structure.

Dimensions

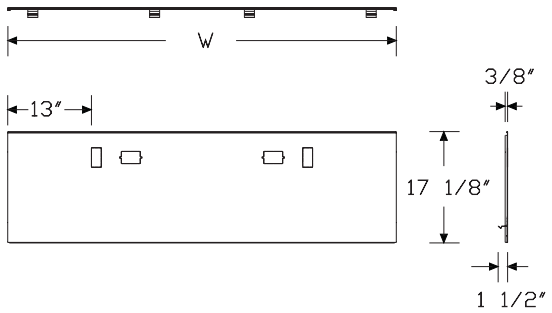

Specification Information

Step 1.

FD170. A

Step 2. Width

42	42″ wide
48	48″ wide
60	60″ wide
72	72″ wide
84	84″ wide
96	96″ wide

Step 3. Surface Material

P	painted

Step 4. Cord Knockouts

K	knockouts
N	no knockouts

Prices for Steps 1-4.

		K	N
FD170.	**42 P**	$312	312
	48 P	$318	318
	60 P	$334	334
	72 P	$351	351
	84 P	$410	410
	96 P	$456	456

Step 5. Surface Finish

Metallic Paint

611	beige mist metallic (CP) A	+$0
613	silver (CP) A	+$0
EH	metallic bronze	+$0
SNA	satin aluminum	+$10
SNB	satin bronze	+$10
SNC	satin carbon	+$10

Sand Texture Paint		
UBK	ultra black (CP) A	+$0
8Q	folkstone grey (CP)	+$0
91	white (CP)	+$0
98	studio white (CP)	+$0
BK	black	+$0
CL	cool grey neutral	+$0
G1	graphite (CP)	+$0
WL	warm stone (CP)	+$0
WN	warm grey neutral	+$0

Power Entry, Internal Direct Connect - Floor FD144.

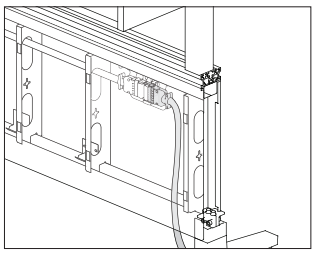

Product Information

Description

This power entry connects a building's electrical supply from a wall, floor or column to the dock. It is available in 8-wire and 10-wire configurations and distributes up to 4 20-amp circuits. It connects to the modular connection location on the end of a dock power harness. Power entry is UL listed and Canadian UL listed.

Notes

Power entry uses 1 modular connection location on each end of adjacent dock power harnesses (FD151.).

Licensed electrician must wire the power entry.

Dimensions

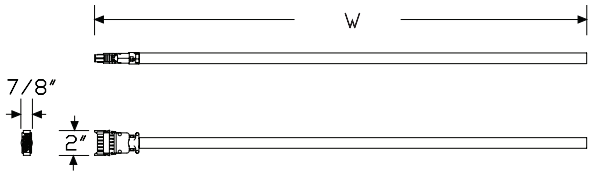

Specification Information

Step 1.

FD144. A

Step 2. Configuration

08	8-wire, 4-circuit, shared neutral
10	10-wire, 4-circuit, separate neutrals

Step 3. Length

06	6′ long
12	12′ long
18	18′ long
24	24′ long

Prices for Steps 1-3.

		06	12	18	24
FD144.	**08**	$338	475	577	679
	10	$338	475	577	679

Power Entry, New York - Floor Power Entry FD141.

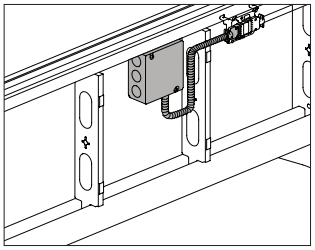

Product Information

Description

This floor power entry connects a building's electrical supply from a wall, floor or column to the dock power harness. It connects to the modular connection location on the end of a dock power harness, and includes a junction box. Power entry is UL listed and Canadian UL listed.

Notes

Licensed electrician must wire power entry.

Power entry uses 1 modular connection location on each end of adjacent dock power harnesses (FD151.).

Dock power harness, internal (FD151.) is required. Order separately.

Dimensions

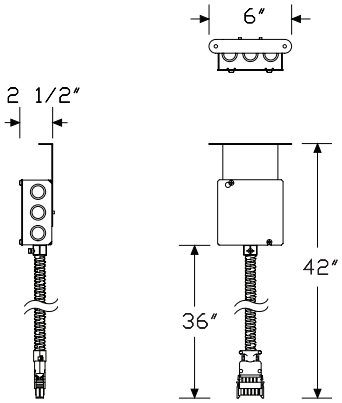

Specification Information

Step 1.

FD141. A

Step 2. Configuration

08	8-wire, 4-circuit, shared neutral
10	10-wire, 4-circuit, separate neutrals

Step 3. Length

30	30″ long

Prices for Steps 1-3.

		30
FD141.	**08**	$602
	10	$602

Ceiling Power Entry FD142.

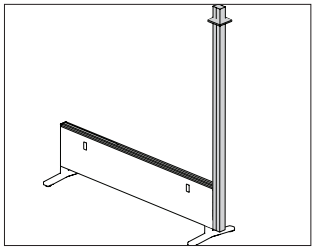

Product Information

Description

This power entry connects a ceiling electrical supply to the end of a dock run. It distributes up to 4 20-amp circuits. The power entry comes with a 10′-high pole that can be field cut to the appropriate length, ceiling trim, connecting hardware conduit, and factory supplied electrical harness. The power entry plugs into the end of the harness. Power entry is UL listed and Canadian UL listed.

Notes

Power entry uses 1 modular connection location on each end of adjacent dock power harnesses (FD151.).

Licensed electrician must wire the power entry.

Dimensions

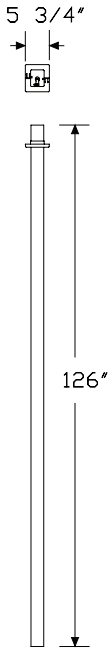

Specification Information

Step 1.

FD142. A

Step 2. Dock Height

22	22″ high dock

Step 3. Power Configuration

08	8-wire, 4-circuit, shared neutral
10	10-wire, 4-circuit, separate neutrals
N	nonpowered

Prices for Steps 1-3.

	08	10	N
FD142. 22	$1281	1281	718

Step 4. Finish

Finish

3G	brownstone	+$0

Sand Texture Paint

8Q	folkstone grey (CP)	+$0
91	white (CP)	+$0
98	studio white (CP)	+$0
BK	black	+$0
CL	cool grey neutral	+$0
G1	graphite (CP)	+$0
UBK	ultra black (CP) A	+$0
WL	warm stone (CP)	+$0
WN	warm grey neutral	+$0

Dock Power Harness FD151.

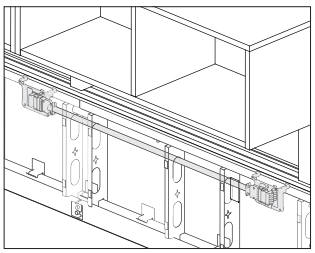

Product Information

Description

This power harness distributes power within a dock. It has 2 power blocks with connecting conduit and is suspended from the dock top rail within the interior of the dock. It is available in 8-wire and 10-wire configurations and distributes up to 4 20-amp circuits. Each power block has 3 additional modular connection locations to connect power entries, block to block jumpers, and power modules. Harness is UL listed.

Notes

Specify width of power harness to match width of dock structure.

Dimensions

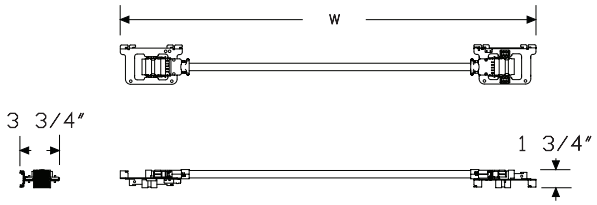

Specification Information

Step 1.

FD151. A

Step 2. Configuration

08	8-wire, 4-circuit, shared neutral
10	10-wire, 4-circuit, separate neutrals

Step 3. Width

42	42″ wide
48	48″ wide
60	60″ wide
72	72″ wide
84	84″ wide
96	96″ wide

Prices for Steps 1-3.

		42	48	60	72	84	96
FD151.	**08**	$281	322	399	476	556	634
	10	$281	322	399	476	556	634

Power, Block to Block Jumper FD154.

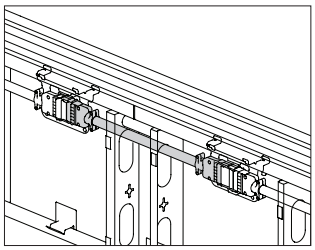

Product Information

Description

This power jumper routes power from a dock power harness to an adjacent dock power harness in an in-line connection. It is available in 8-wire and 10-wire configurations and distributes up to 4 20-amp circuits. It is UL listed and Canadian UL listed.

Notes

Uses 1 modular connection location on each end of adjacent dock power harnesses (FD151.).

Dimensions

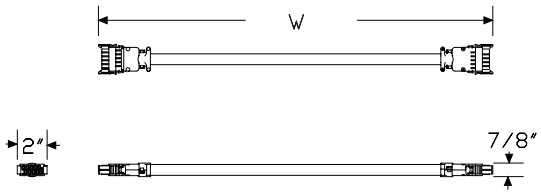

Specification Information

Step 1.

FD154. A

Step 2. Configuration

08	8-wire, 4-circuit, shared neutral
10	10-wire, 4-circuit, separate neutrals

Step 3. Jumper Application

S	for straight dock to dock connections

Step 4. Length

20	20″ long

Prices for Steps 1-4.

			20
FD154.	**08**	**S**	$181
	10	**S**	$181

Power Module - Bottom of Dock FD150.

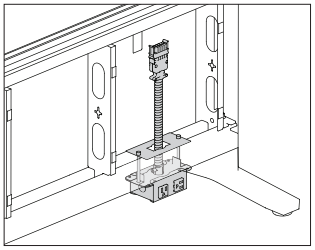

Product Information

Description

This power module attaches at the bottom of the dock. The modular plug end connects to a dock power harness. Power module includes 4 simplex receptacles, 2 on each side of the dock. Receptacles in this module are rated for 15 amps. Attachment hardware included. Power module is UL listed and Canadian UL listed.

Notes

For use with credenza units, order power/data module spacer (FD197.) separately.

Dimensions

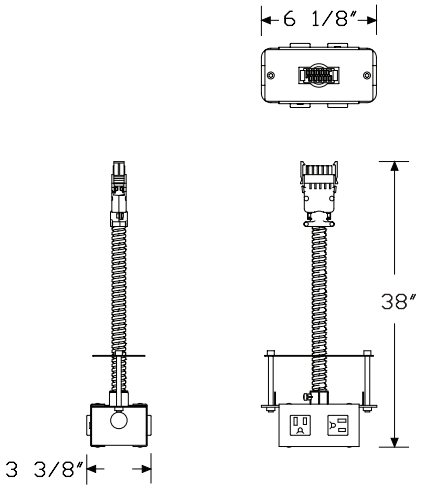

Specification Information

Step 1.

FD150. A

Step 2. Type

AN	8 wire, circuit A, share neutral
BN	8 wire, circuit B, share neutral
CN	8 wire, circuit C, share neutral
DN	8 wire, circuit D, share neutral
BG	8 wire, circuit B, isolated ground
CG	8 wire, circuit C, isolated ground
DG	8 wire, circuit D, isolated ground
ADN	8 wire, (1) circuit A and (1) circuit D on each side
BCI	8 wire, (1) circuit B and (1) circuit CG isolated ground on each side
1N	10 wire, separate neutrals, circuit 1
2N	10 wire, separate neutrals, circuit 2
3N	10 wire, separate neutrals, circuit 3
3G	10 wire, separate neutrals, isolated ground, circuit 3
4N	10 wire, separate neutrals, circuit 4
4G	10 wire, separate neutrals, isolated ground, circuit 4
1N4N	10 wire, (1) circuit 1N and (1) circuit 4N on each side
2N3G	10 wire, (1) circuit 2N and (1) isolated ground 3G on each side

Prices for Steps 1-2.

FD150.	**AN**	$556
	BN	$556
	CN	$556
	DN	$556
	BG	$556
	CG	$556
	DG	$556
	ADN	$556
	BCI	$556
	1N	$556
	2N	$556
	3N	$556
	3G	$556
	4N	$556
	4G	$556
	1N4N	$556
	2N3G	$556

Power Module - Bottom of Dock

continued

Step 3. Finish		
Metallic Paint		
613	silver (CP) A	+$0
SNA	satin aluminum	+$10
SNB	satin bronze	+$10
SNC	satin carbon	+$10
Sand Texture Paint		
8Q	folkstone grey (CP)	+$0
91	white (CP)	+$0
98	studio white (CP)	+$0
BK	black	+$0
G1	graphite (CP)	+$0
UBK	ultra black (CP) A	+$0
WL	warm stone (CP)	+$0

Power Module - Bottom of Dock - 20 amp FD156.

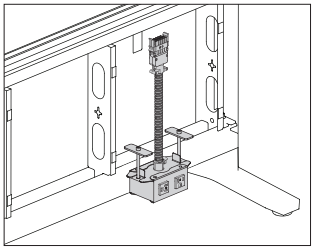

Product Information

Description

This power module attaches at the bottom of the dock. The modular plug end connects to a dock power harness. Power module includes 4 simplex receptacles, 2 on each side of the dock. Receptacles in this module are rated for 20 amps. Attachment hardware included. Power module is UL listed and Canadian UL listed.

Notes

Receptacles are black. Metal housing is painted.

Dimensions

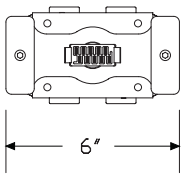

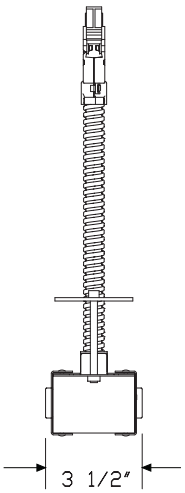

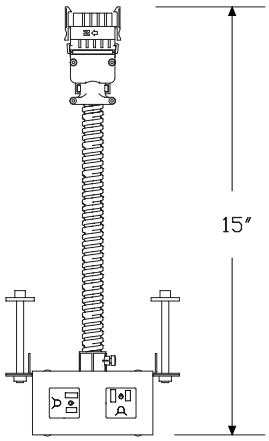

Specification Information

Step 1.

FD156. A

Step 2. Type

AN	8 wire, shared neutral, circuit A
BN	8 wire, shared neutral, circuit B
CN	8 wire, shared neutral, circuit C
DN	8 wire, shared neutral, circuit D
BG	8 wire, shared neutral, circuit B, isolated ground
CG	8 wire, shared neutral, circuit C isolated ground
DG	8 wire, shared neutral, circuit D, isolated ground
ADN	8 wire, shared neutral, (1) circuit A and (1) circuit D on each side
BCI	8 wire, shared neutral, (1) circuit B and (1) circuit CG isolated ground on each side
1N	10 wire, separate neutrals, circuit 1
2N	10 wire, separate neutrals, circuit 2
3N	10 wire, separate neutrals, circuit 3
3G	10 wire, seperate neutrals, circuit 3, isolated ground
4N	10 wire, separate neutrals, circuit 4
4G	10 wire, separate neutrals, isolated ground, circuit 4
1N4N	10 wire, (1) circuit 1N and (1) circuit 4N on each side
2N3G	10 wire, (1) circuit 2N and (1) isolated ground 3G on each side

Prices for Steps 1-2.

FD156.	**AN**	$634
	BN	$634
	CN	$634
	DN	$634
	BG	$634
	CG	$634
	DG	$634
	ADN	$634
	BCI	$634
	1N	$634
	2N	$634
	3N	$634
	3G	$634
	4N	$634
	4G	$634
	1N4N	$634
	2N3G	$634

Power Module - Bottom of Dock - 20 amp *continued*

Step 3. Finish

Metallic Paint		
613	silver (CP) A	+$0
SNA	satin aluminum	+$10
SNB	satin bronze	+$10
SNC	satin carbon	+$10

Sand Texture Paint		
8Q	folkstone grey (CP)	+$0
91	white (CP)	+$0
98	studio white (CP)	+$0
BK	black	+$0
G1	graphite (CP)	+$0
UBK	ultra black (CP) A	+$0
WL	warm stone (CP)	+$0

Under Surface Power Module FD152.

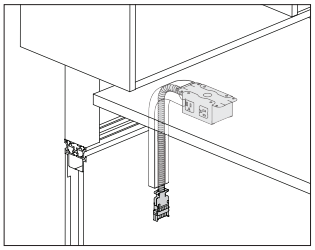

Product Information

Description

This power module attaches beneath a dock-supported work surface. The modular plug end connects to a dock power harness. Power module includes 4 simplex receptacles, rated for 15 amps. Attachment hardware included. Power module is UL listed and Canadian UL listed.

Notes

Specify cladding (FD170.) with knockouts (K).

To cover conduit, data cables, and cladding knockout, specify cable manager dock to surface (FD199.).

Uses 1 modular connection location on each end of adjacent dock power harnesses (FD151.).

Dimensions

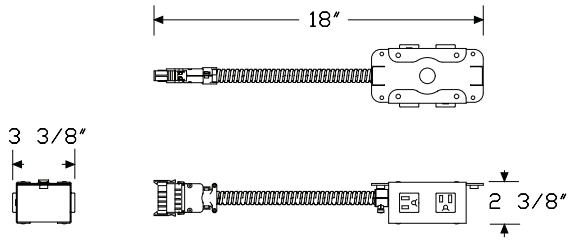

Specification Information

Step 1.

FD152. A

Step 2. Type

AN	8 wire, circuit A, share neutral
BN	8 wire, circuit B, share neutral
CN	8 wire, circuit C, share neutral
DN	8 wire, circuit D, share neutral
BG	8 wire, circuit B, isolated ground
CG	8 wire, circuit C, isolated ground
DG	8 wire, circuit D, isolated ground
ADN	8 wire, (1) circuit A and (1) circuit D on each side
BCI	8 wire, (1) circuit B and (1) circuit CG isolated ground on each side
1N	10 wire, separate neutrals, circuit 1
2N	10 wire, separate neutrals, circuit 2
3N	10 wire, separate neutrals, circuit 3
3G	10 wire, separate neutrals, isolated ground, circuit 3
4N	10 wire, separate neutrals, circuit 4
4G	10 wire, separate neutrals, isolated ground, circuit 4
1N4N	10 wire, (1) circuit 1N and (1) circuit 4N on each side
2N3G	10 wire, (1) circuit 2N and (1) isolated ground 3G on each side

Step 3. Cord/Conduit Length

03	3′ cord/conduit

Prices for Steps 1-3.

		03
FD152.	**AN**	$556
	BN	$556
	CN	$556
	DN	$556
	BG	$556
	CG	$556
	DG	$556
	ADN	$556
	BCI	$556
	1N	$556
	2N	$556
	3N	$556
	3G	$556
	4N	$556
	4G	$556
	1N4N	$556
	2N3G	$556

Step 4. Finish		
613	silver (CP) A	+$0
SNA	satin aluminum	+$10
SNB	satin bronze	+$10
SNC	satin carbon	+$10
8Q	folkstone grey (CP)	+$0
91	white (CP)	+$0
98	studio white (CP)	+$0
BK	black	+$0
G1	graphite (CP)	+$0
UBK	ultra black (CP) A	+$0
WL	warm stone (CP)	+$0

Power Module-Top of Dock FD158.

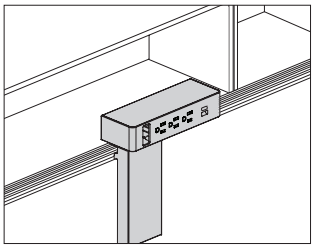

Product Information

Description

This power module attaches to the Canvas dock top rail. The unit has a modular connection end that attaches to 1 connection point of the internal dock power harness. It has 3 power outlets, 2 USB A/C combo charging ports, an opening for data module terminations, and an integrated cable manager rated for 15 amps. Mounting hardware included. Product is UL listed.

Notes

Power unit is plastic; vertical wire chase is painted metal. When specifying white (91) or graphite (G1) paint, plastic housing color matches specified painted surface finish. When specifying metallic silver (MS) paint, plastic housing color is cool grey neutral (CL).

USB ports will charge most small electronic devices. Software in each device controls the ability to accept charge via USB. Each USB port supplies 10 watts of power.

When attached to Canvas dock top rail, top of power unit is 25¼″ above the floor.

8 wire, shared neutral product (AN, BN, CN, DN) is a 3+1 configuration.

Dimensions

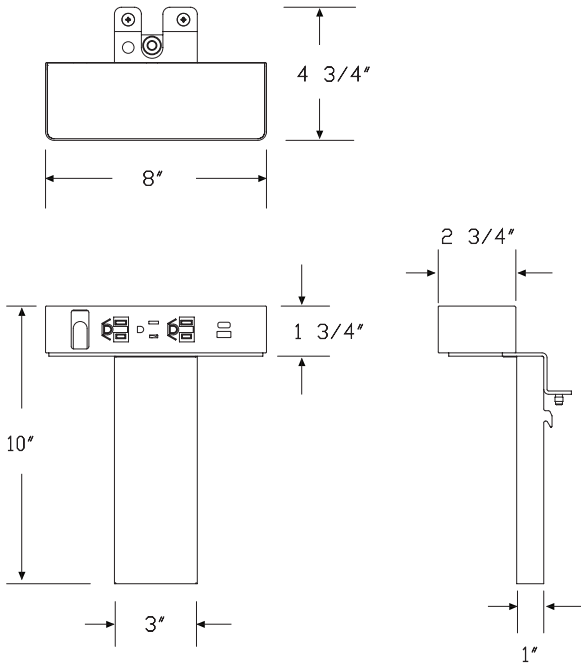

Specification Information

Step 1.

FD158. A

Step 2. Configuration

H	3 simplex receptables, 2 powered USB, 1 Data Opening

Step 3. Circuit Type

AN	8 wire, circuit A, shared neurtral
BN	8 wire, circuit B, shared neurtral
CN	8 wire, circuit C, shared neurtral
DN	8 wire, circuit D, shared neurtral
1N	10 wire, separate neutrals, circuit 1
2N	10 wire, separate neutrals, circuit 2
3N	10 wire, separate neutrals, circuit 3
4N	10 wire, separate neutrals, circuit 4
H	for hardwiring-chicago code-conduit with open end

Prices for Steps 1-3.

		AN	BN	CN	DN	1N	2N
FD158.	**H**	$883	883	883	883	913	913

		3N	4N	H
FD158.	**H**	$913	913	913

Step 4. Surface Finish

613	silver (CP) A	+$0
UBK	ultra black (CP) A	+$0
3G	brownstone	+$0
8Q	folkstone grey (CP)	+$0
91	white (CP)	+$0
98	studio white (CP)	+$0
BK	black	+$0
G1	graphite (CP)	+$0
SNA	satin aluminum	+$10
SNB	satin bronze	+$10
SNC	satin carbon	+$10
WL	warm stone (CP)	+$0

Controlled Power Module - Bottom of Dock FD150M

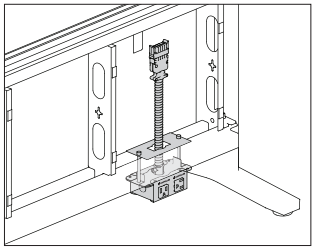

Product Information

Description

This receptacle is to be used for ASHRAE 90.1 and Title 24 compliance. A controlled receptacle should be used for any receptacles that are under automated control by the energy management system. This power module attaches at the bottom of the dock. The modular plug end connects to a dock power harness. Power module includes 4 simplex receptacles, 2 on each side of the dock. Receptacles in this module are rated for 15 amps. Attachment hardware included. Power module is UL listed and Canadian UL listed.

Notes

For modules with 2 circuits, ensure that the controlled marking is only specified for the circuits that will be under automated control by the energy management system.

For use with credenza units, order power/data module spacer (FD197.) separately.

Dimensions

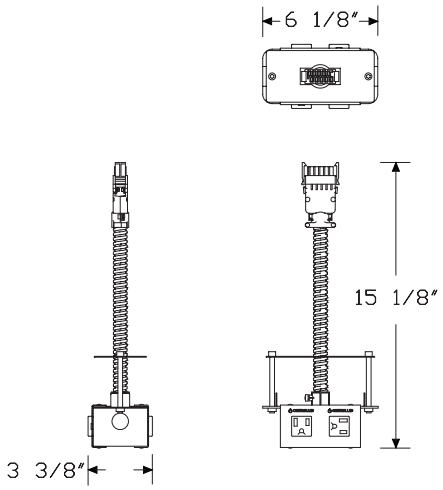

Specification Information

Step 1.

FD150M. A

Step 2. Type

AN	8 wire, circuit A, share neutral
BN	8 wire, circuit B, share neutral
CN	8 wire, circuit C, share neutral
DN	8 wire, circuit D, share neutral
BG	8 wire, circuit B, isolated ground
CG	8 wire, circuit C, isolated ground
DG	8 wire, circuit D, isolated ground
ADN	8 wire, (1) circuit A and (1) circuit D on each side
BCI	8 wire, (1) circuit B and (1) circuit CG isolated ground on each side
ADNA	8 wire, (1) circuit A and (1) circuit D on each side A controlled marking on A circuit
BCIB	8 wire, (1) circuit B and (1) circuit CG isolated ground on each side A controlled marking on B circuit
ADND	8 wire, (1) circuit A and (1) circuit D on each side A controlled marking on D circuit
BCIC	8 wire, (1) circuit B and (1) circuit CG isolated ground on each side A controlled marking on C circuit
1N	10 wire, separate neutrals, circuit 1
2N	10 wire, separate neutrals, circuit 2
3N	10 wire, separate neutrals, circuit 3
3G	10 wire, separate neutrals, isolated ground, circuit 3
4N	10 wire, separate neutrals, circuit 4
4G	10 wire, separate neutrals, isolated ground, circuit 4
1N4N	10 wire, (1) circuit 1N and (1) circuit 4N on each side
2N3G	10 wire, (1) circuit 2N and (1) isolated ground 3G on each side

Controlled Power Module - Bottom of Dock *continued*

Prices for Steps 1-2.		
FD150M.	**AN**	$556
	BN	$556
	CN	$556
	DN	$556
	BG	$556
	CG	$556
	DG	$556
	ADN	$556
	BCI	$556
	ADNA	$556
	BCIB	$556
	ADND	$556
	BCIC	$556
	1N	$556
	2N	$556
	3N	$556
	3G	$556
	4N	$556
	4G	$556
	1N4N	$556
	2N3G	$556

Step 3. Finish

Metallic Paint		
613	silver (CP) A	+$0
SNA	satin aluminum	+$10
SNB	satin bronze	+$10
SNC	satin carbon	+$10

Sand Texture Paint		
8Q	folkstone grey (CP)	+$0
91	white (CP)	+$0
98	studio white (CP)	+$0
BK	black	+$0
G1	graphite (CP)	+$0
UBK	ultra black (CP) A	+$0
WL	warm stone (CP)	+$0

Under Surface Controlled Power Module FD152M

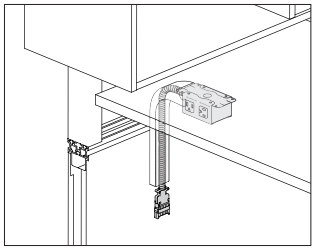

Product Information

Description

This receptacle is to be used for ASHRAE 90.1 and Title 24 compliance. A controlled receptacle should be used for any receptacles that are under automated control by the energy management system. This power module attaches beneath a dock-supported work surface. The modular plug end connects to a dock power harness. Power module includes 4 simplex receptacles, rated for 15 amps. Attachment hardware included. Power module is UL listed and Canadian UL listed.

Notes

For modules with 2 circuits, ensure that the controlled marking is only specified for the circuits that will be under automated control by the energy management system.

Dimensions

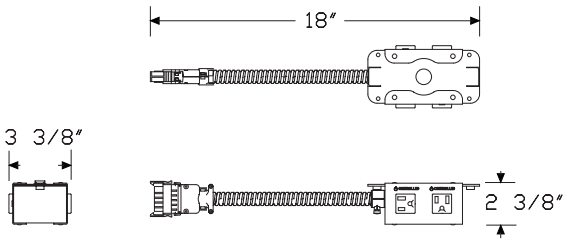

Specification Information

Step 1.

FD152M. A

Step 2. Type

AN	8 wire, circuit A, share neutral
BN	8 wire, circuit B, share neutral
CN	8 wire, circuit C, share neutral
DN	8 wire, circuit D, share neutral
BG	8 wire, circuit B, isolated ground
CG	8 wire, circuit C, isolated ground
DG	8 wire, circuit D, isolated ground
ADN	8 wire, (1) circuit A and (1) circuit D on each side
BCI	8 wire, (1) circuit B and (1) circuit CG isolated ground on each side
ADNA	8 wire, (1) circuit A and (1) circuit D on each side A controlled marking on A circuit
BCIB	8 wire, (1) circuit B and (1) circuit CG isolated ground on each side A controlled marking on B circuit
ADND	8 wire, (1) circuit A and (1) circuit D on each side A controlled marking on D circuit
BCIC	8 wire, (1) circuit B and (1) circuit CG isolated ground on each side A controlled marking on C circuit
1N	10 wire, separate neutrals, circuit 1
2N	10 wire, separate neutrals, circuit 2
3N	10 wire, separate neutrals, circuit 3
3G	10 wire, separate neutrals, isolated ground, circuit 3
4N	10 wire, separate neutrals, circuit 4
4G	10 wire, separate neutrals, isolated ground, circuit 4
1N4N	10 wire, (1) circuit 1N and (1) circuit 4N on each side
2N3G	10 wire, (1) circuit 2N and (1) isolated ground 3G on each side

Step 3. Cord/Conduit Length

03	3′ cord/conduit

Under Surface Controlled Power Module *continued*

Prices for Steps 1-3.

		03
FD152M.	**AN**	$556
	BN	$556
	CN	$556
	DN	$556
	BG	$556
	CG	$556
	DG	$556
	ADN	$556
	BCI	$556
	ADNA	$556
	BCIB	$556
	ADND	$556
	BCIC	$556
	1N	$556
	2N	$556
	3N	$556
	3G	$556
	4N	$556
	4G	$556
	1N4N	$556
	2N3G	$556

Step 4. Finish

Metallic Paint		
613	silver (CP) A	+$0
SNA	satin aluminum	+$10
SNB	satin bronze	+$10
SNC	satin carbon	+$10

Sand Texture Paint		
8Q	folkstone grey (CP)	+$0
91	white (CP)	+$0
98	studio white (CP)	+$0
BK	black	+$0
G1	graphite (CP)	+$0
UBK	ultra black (CP) A	+$0
WL	warm stone (CP)	+$0

Controlled Receptacle Decal (12 per sheet) G9999.

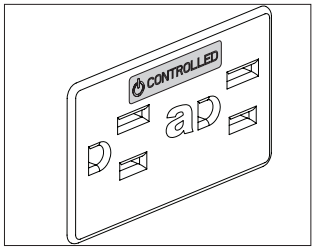

Product Information

Description

This decal is to be used for ASHRAE90.1 and Title 24 compliance. The decal is used to mark standard receptacles (new or existing) that are under automated control by the energy management system. 1 sheet includes 12 clear decals with white or black print.

Dimensions

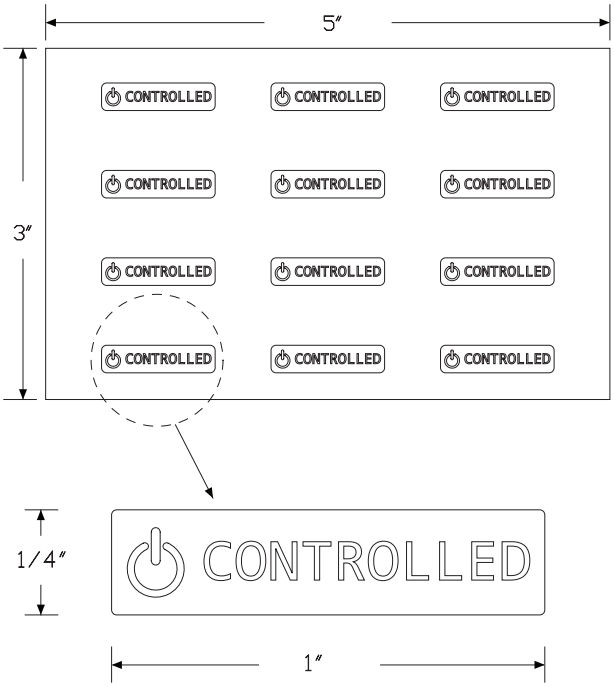

Specification Information

Step 1.

G9999. A

Step 2. Color

B	black print	A
W	white print	A

Prices for Steps 1-2.

G9999.	**B**	$18
	W	$18

Logic G1000 Grommet Mounted Electrical Distributor

Y1425.

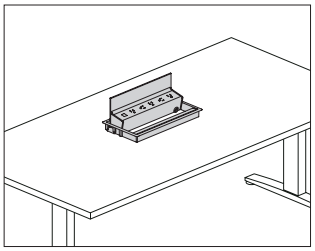

Product Information

Description

This Logic Power Access Solutions™ grommet mounted electrical distributor comes in several widths and configurations of simplex receptacles and USB-A and USB-C charging ports. The unit is powered using a standard power cord with plug end, or an IEC connector when used with Renew™ Sit-to-Stand tables. An integrated cord keeper at the face of the unit captures data cords. The unit pivots from a closed position to 135° allowing easy access to power and data cords stored beneath the unit. Product is UL listed.

Notes

Field cutting of grommet cutout is possible.

IEC connector for Renew power type (C) includes short cord designed to connect to the Renew table power cord through-leg option. Actual cord length may vary.

Simplex receptacles have alternating orientation and greater than normal plug spacing to accommodate most plug types.

USB ports provide a combined 20 watts of power to charge most devices and tablets at full speed. USB-C provides 15 watts of power and USB-A provides 10 watts of power individually. When using the USB-C and USB-A ports simultaneously, USB-C remains at 15 watts and USB-A reduces to 5 watts.

Refer to Renew Sit-to-Stand Tables planning guide for specific application information.

20′ cord/conduit length (20) is recommended for Exclave® applications.

Dimensions

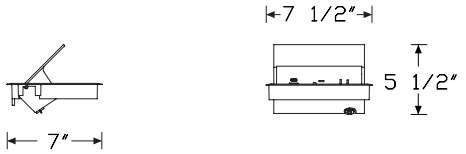

2 simplex receptacles with 1 powered USB A/C combo (H)

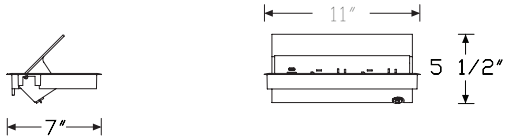

4 simplex receptacles with 1 powered USB A/C combo (I)

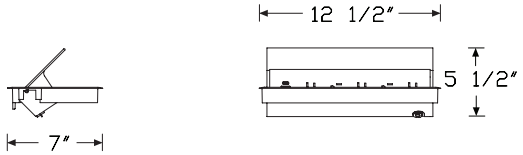

5 simplex receptacles with 1 powered USB A/C combo (J)

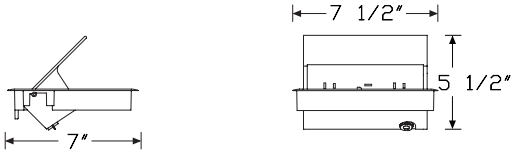

3 simplex receptacles (E)

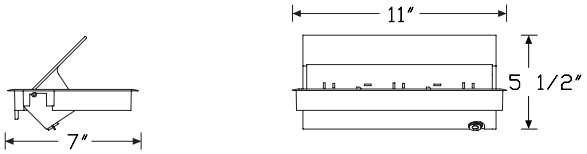

5 simplex receptacles (F)

Logic G1000 Grommet Mounted Electrical Distributor *continued*

Specification Information

Step 1.

Y1425.

Step 2. Configuration

H	2 simplex receptacles, 1 powered USB A/C Combo
I	4 simplex receptacles, 1 powered USB A/C Combo
E	3 simplex receptacles
F	5 simplex receptacles

Step 3. Power Type

A	power cord with plug end
C	IEC connector for Renew Tables

Step 4. Cord/Conduit Length

For power cord with plug end (A)

03	3′ cord/conduit
06	6′ cord/conduit
10	10′ cord/conduit
20	20′ cord/conduit

For IEC connector for Renew Tables (C)

03	3′ cord/conduit

Prices for Steps 1-4.

			03	06	10	20
Y1425.	**H**	**A**	$900	900	914	929
		C	$914	—	—	—
	I	**A**	$1042	1042	1059	1074
		C	$1059	—	—	—
	E	**A**	$693	693	706	718
		C	$706	—	—	—
	F	**A**	$836	836	851	867
		C	$851	—	—	—

Step 5. Finish

613	silver (CP)	+$0
91	white (CP) A	+$0
98	studio white (CP) A	+$0
BK	black A	+$0
G1	graphite (CP) A	+$0
UBK	ultra black (CP)	+$0

Cable Clips FD198.

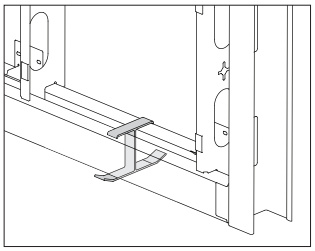

Product Information

Description

These optional cable clips are used to route wires and cables in the 1″ cable gap between the face of the dock cladding and the back of a Canvas low credenza with 4″ feet and thin top. Clip color is black. Package of 4.

Dimensions

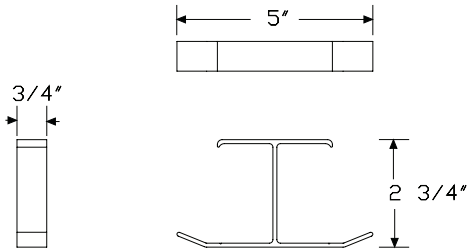

Specification Information

Step 1.

FD198. A		$105

Step 2. Finish

UBK	ultra black (CP) A	+$0
BK	black	+$0

Data Housing FD159.

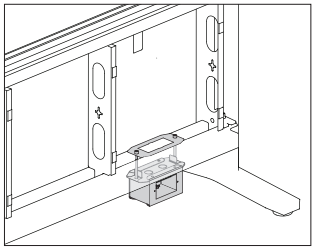

Product Information

Description

This housing mounts on the bottom of the dock or under a work surface and supports face plates with voice/data ports. Attachment hardware included.

Notes

Housing accepts a NEMA data faceplate.

Dimensions

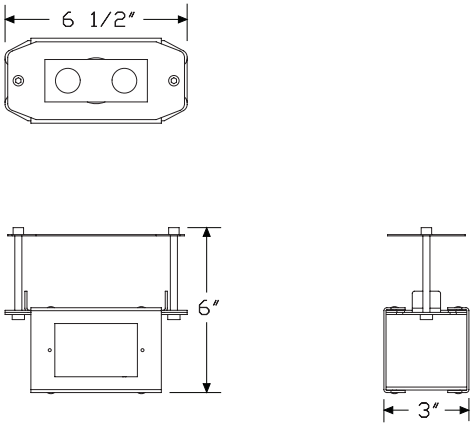

Specification Information

Step 1.

FD159. A

Step 2. Application

01	bottom of the dock
02	under work surface

Prices for Steps 1-2.

FD159.	**01**	$294
	02	$294

Step 3. Finish

Metallic Paint

613	silver (CP) A	+$0
SNA	satin aluminum	+$10
SNB	satin bronze	+$10
SNC	satin carbon	+$10

Sand Texture Paint

8Q	folkstone grey (CP)	+$0
91	white (CP)	+$0
98	studio white (CP)	+$0
BK	black	+$0
G1	graphite (CP)	+$0
UBK	ultra black (CP) A	+$0
WL	warm stone (CP)	+$0

Power/Data Module Spacer FD197.

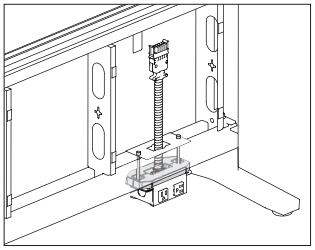

Product Information

Description

This optional spacer lowers the height of bottom-of-dock power modules to make them more accessible. Package contains 1 spacer.

Notes

For use with the following products, ordered separately:

- Power module (FD150.)
- Controlled power module (FD150M.)
- Power module - 20 amp (FD156)
- Data housing (FD159)

Dimensions

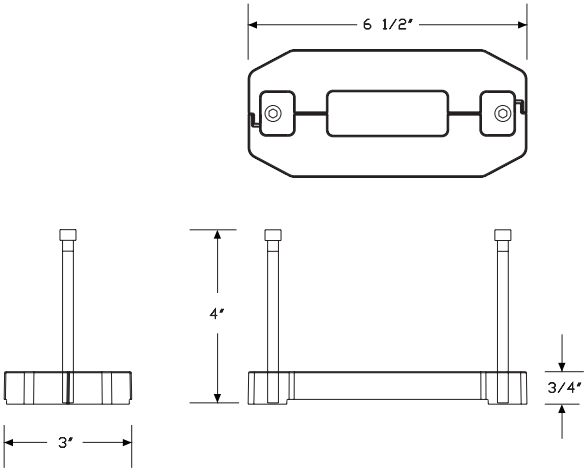

Specification Information

Step 1.

FD197.	$41

Step 2. Surface Finish

Finish		
3G	brownstone	+$0

Sand Texture Paint		
91	white (CP)	+$0
BK	black	+$0
CL	cool grey neutral	+$0
G1	graphite (CP)	+$0
UBK	ultra black (CP)	+$0

Cable Manager - Dock to Surface FD199.

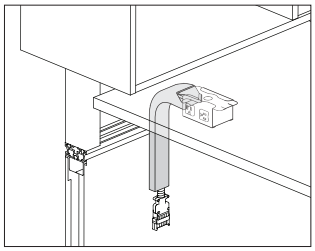

Product Information

Description

This optional cable manager routes power and data from the dock to the underside of a dock-supported work surface. Attachment hardware included.

Notes

Manages data cables and covers conduit, cables and knockout in cladding.

Specify undersurface power module (FD152.) separately.

Specify undersurface data module (FD159.02) separately.

Dimensions

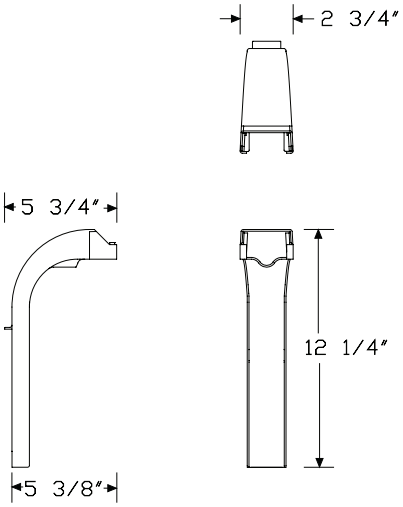

Specification Information

Step 1.

FD199. A

Step 2. Height

10	10″ high A	

Prices for Steps 1-2.

FD199. 10		$190

Step 3. Finish

3G	brownstone	+$0
UBK	ultra black (CP) A	+$0
8Q	folkstone grey (CP)	+$0
91	white (CP)	+$0
98	studio white (CP)	+$0
BK	black	+$0
CL	cool grey neutral	+$0
G1	graphite (CP)	+$0
WL	warm stone (CP)	+$0

Individual Bridge

FDE17.
FDS17.

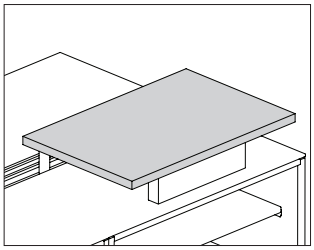

Product Information

Description

This surface spans the dock and lower storage on 1 side of the dock. It has a laminate top and thermoplastic edge, laminate top with a thermoplastic backed plywood edge, veneer top and edge, or painted Formcoat® top and edge. Laminate surfaces are 1¼″ thick. Painted Formcoat surfaces are 1″ thick. Stabilizer brackets included.

Notes

Bridge is supported by a low credenza with 4″ foot and thin top on one side of dock wall. Specify the following products separately, 1 for each side of the individual bridge:

- Surface support, low credenza, adjustable height (FT299.)
- Surface support, low credenza, fixed height (FT298.)

Power access center cutout option (CAC) accepts the Logic G1000 grommet mounted electrical distributor, 6-receptacle unit (Y1425.D or Y1425.G), ordered separately.

Dimensions

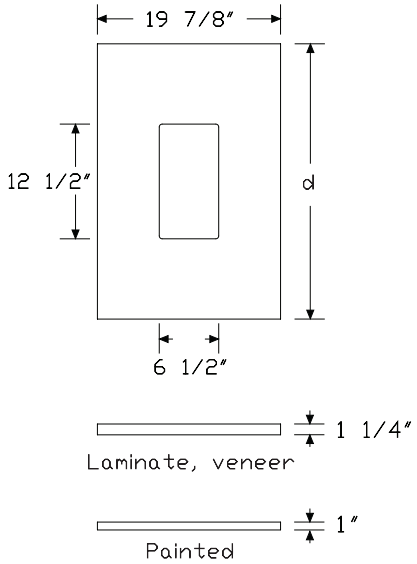

Specification Information

Step 1.

FD A

Step 2. Edge

S17. squared edge
E17. eased-edge A

Step 3. Depth

24 24″ deep
30 30″ deep

Step 4. Width

20 20″ wide

Step 5. Surface Material

For squared edge (S17.)

L high-pressure laminate top/thermoplastic edge
P painted Formcoat® top/edge A
U high-pressure laminate/universal edge

For eased-edge (E17.)

P painted Formcoat® top/edge A

Prices for Steps 1-5.

		L	P	U
FDS17.	**24 20**	$400	781	400
	30 20	$456	817	456

		L	P	U
FDE17.	**24 20**	—	$874	—
	30 20	—	$913	—

Step 6. Power Access Cutout

NNN	no cutout	+$0
CAC	center cutout	+$75

Step 7.

Top Finish

For high-pressure laminate top/thermoplastic edge (L) or high-pressure laminate/universal edge (U)

125	natural maple (CP) A	+$0
126	natural cherry (CP) A	+$0
127	walnut (CP) A	+$0
139	light ash (CP) A	+$0
140	warm ash (CP) A	+$0
UBK	ultra black (CP) A	+$0
8Q	folkstone grey (CP)	+$0
91	white (CP)	+$0
98	studio white (CP)	+$0
CL	cool grey neutral	+$0
HF	inner tone light	+$0
LU	soft white	+$0
WL	warm stone (CP)	+$0
WN	warm grey neutral	+$0
76	light brown walnut	+$0
HP	light anigre	+$0
LBA	clear on ash (CP)	+$0
LBR	phantom ecru	+$0
LBS	phantom cocoa	+$0
LBU	medium matte walnut (CP)	+$0
LBV	warm grey teak	+$0
LBB	oak on ash (CP)	+$0
LBC	walnut on ash (CP)	+$0
LBF	neutral twill	+$0
LBJ	graphite twill	+$0
LBQ	white twill	+$0

Top/Edge Finish: Opaque Formcoat®

For painted Formcoat® top/edge (P)

8Q	folkstone grey (CP) A	+$0
91	white (CP) A	+$0
LU	soft white A	+$0

Step 8. Edge Finish

For high-pressure laminate top/thermoplastic edge (L)

125	natural maple (CP) A	+$0
126	natural cherry (CP) A	+$0
127	walnut (CP) A	+$0
139	light ash (CP) A	+$0
140	warm ash (CP) A	+$0
G1	graphite (CP) A	+$0
UBK	ultra black (CP) A	+$0
76	light brown walnut	+$0
8Q	folkstone grey (CP)	+$0
91	white (CP)	+$0
98	studio white (CP)	+$0
CL	cool grey neutral	+$0
LBA	clear on ash (CP)	+$0
LBR	phantom ecru	+$0
LBS	phantom cocoa	+$0
LBU	medium matte walnut (CP)	+$0
LBV	warm grey teak	+$0
LBB	oak on ash (CP)	+$0
LBC	walnut on ash (CP)	+$0
LBF	neutral twill	+$0
LBJ	graphite twill	+$0
LBQ	white twill	+$0
WL	warm stone (CP)	+$0
WN	warm grey neutral	+$0
HF	inner tone light	+$0
HP	light anigre	+$0
LU	soft white	+$0

For high-pressure laminate/universal edge (U)

PLY	plywood edge	+$50

Half Bridge

FDE15.
FDS15.

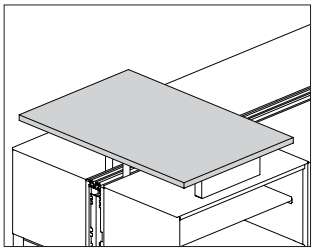

Product Information

Description

This surface spans the dock and lower storage on both sides of the dock. It has a laminate top and thermoplastic edge, laminate top with a thermoplastic backed plywood edge, veneer top and edge, or painted Formcoat® top and edge. Laminate surfaces are 1¼″ thick. Painted Formcoat surfaces are 1″ thick. Stabilizer brackets included.

Notes

Bridge is supported by a low credenza with 4″ foot and thin top on both sides of the dock wall. Specify the following products separately, 1 for each side of the half bridge:

- Surface support, low credenza, adjustable height (FT299.)
- Surface support, low credenza, fixed height (FT298.)

Power access center cutout option (CAC) accepts the Logic G1000 grommet mounted electrical distributor, 6-receptacle unit (Y1425.D or Y1425.G), ordered separately.

Dimensions

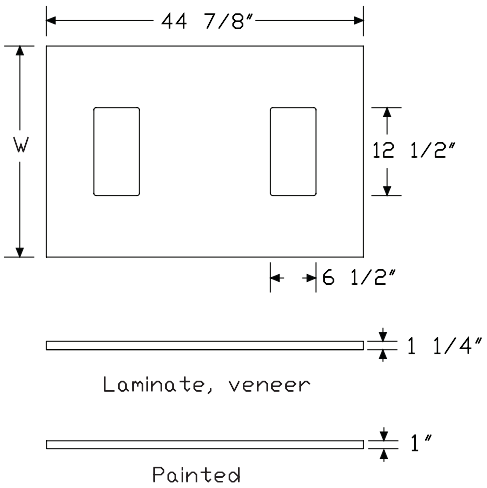

Specification Information

Step 1.

FD A

Step 2. Edge

S15. squared-edge A
E15. eased-edge A

Step 3. Depth

24 24″ deep A
30 30″ deep A

Step 4. Width

45 45″ wide A

Step 5. Surface Material

For squared-edge (S15.)

L high-pressure laminate top/thermoplastic edge A
P painted Formcoat® top/edge A
U high-pressure laminate/universal edge A

For eased-edge (E15.)

P painted Formcoat® top/edge A

Prices for Steps 1-5.

		L	P	U
FDS15.	**24 45**	$650	841	650
	30 45	$657	955	657

		L	P	U
FDE15.	**24 45**	—	$989	—
	30 45	—	$1122	—

Step 6. Power Access Cutout

NNN	no cutout A	+$0
CAC	center cutout A	+$75

Step 7.

Top Finish

For high-pressure laminate top/thermoplastic edge (L) or high-pressure laminate/universal edge (U)

125	natural maple (CP) A	+$0
126	natural cherry (CP) A	+$0
127	walnut (CP) A	+$0
139	light ash (CP) A	+$0
140	warm ash (CP) A	+$0
UBK	ultra black (CP) A	+$0
8Q	folkstone grey (CP) A	+$0
91	white (CP) A	+$0
98	studio white (CP) A	+$0
CL	cool grey neutral A	+$0
HF	inner tone light A	+$0
LU	soft white A	+$0
WL	warm stone (CP) A	+$0
WN	warm grey neutral A	+$0
76	light brown walnut A	+$0
HP	light anigre A	+$0
LBA	clear on ash (CP) A	+$0
LBR	phantom ecru A	+$0
LBS	phantom cocoa A	+$0
LBU	medium matte walnut (CP) A	+$0
LBV	warm grey teak A	+$0
LBB	oak on ash (CP) A	+$0
LBC	walnut on ash (CP) A	+$0
LBF	neutral twill A	+$0
LBJ	graphite twill A	+$0
LBQ	white twill A	+$0

Top/Edge Finish: Opaque Formcoat®

For painted Formcoat® top/edge (P)

8Q	folkstone grey (CP) A	+$0
91	white (CP) A	+$0
LU	soft white A	+$0

Step 8. Edge Finish

For high-pressure laminate top/thermoplastic edge (L)

125	natural maple (CP) A	+$0
126	natural cherry (CP) A	+$0
127	walnut (CP) A	+$0
139	light ash (CP) A	+$0
140	warm ash (CP) A	+$0
G1	graphite (CP) A	+$0
UBK	ultra black (CP) A	+$0
76	light brown walnut	+$0
8Q	folkstone grey (CP)	+$0
91	white (CP)	+$0
98	studio white (CP)	+$0
CL	cool grey neutral	+$0
LBA	clear on ash (CP)	+$0
LBR	phantom ecru	+$0
LBS	phantom cocoa	+$0
LBU	medium matte walnut (CP)	+$0
LBV	warm grey teak	+$0
LBB	oak on ash (CP)	+$0
LBC	walnut on ash (CP)	+$0
LBF	neutral twill	+$0
LBJ	graphite twill	+$0
LBQ	white twill	+$0
WL	warm stone (CP)	+$0
WN	warm grey neutral	+$0
HF	inner tone light	+$0
HP	light anigre	+$0
LU	soft white	+$0

For high-pressure laminate/universal edge (U)

PLY	plywood edge	+$50

Team Bridge

FDE16.
FDS16.

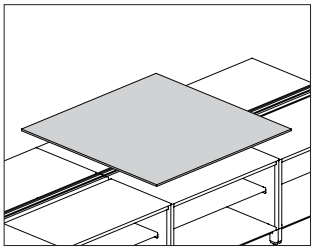

Product Information

Description

This surface spans the dock and lower storage on both sides of the dock. It has a laminate top and thermoplastic edge, laminate top with a thermoplastic backed plywood edge, veneer top and edge, or painted Formcoat® top and edge. Laminate surfaces are 1¼″ thick. Painted Formcoat surfaces are 1″ thick. Stabilizer brackets included.

Notes

Bridge is supported by a low credenza with 4″ foot and thin top on both sides of the dock wall. Specify the following products separately, 1 for each side of the team bridge:

- Surface support, low credenza, adjustable height (FT299.)
- Surface support, low credenza, fixed height (FT298.)

Dimensions

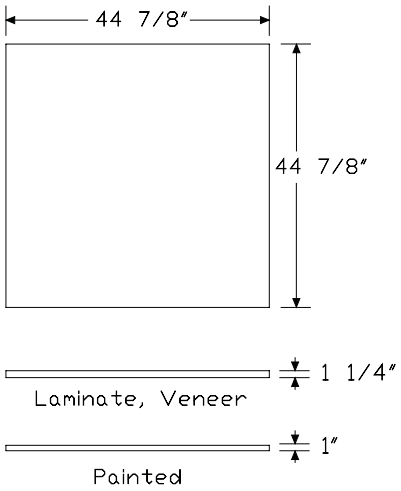

Specification Information

Step 1.

FD A

Step 2. Edge

S16. squared-edge
E16. eased-edge A

Step 3. Depth

45 45″ deep

Step 4. Width

45 45″ wide

Step 5. Surface Material

For squared-edge (S16.)

L high-pressure laminate top/thermoplastic edge
P painted Formcoat® top/edge A
U high-pressure laminate/universal edge

For eased-edge (E16.)

P painted Formcoat® top/edge A

Prices for Steps 1-5.

	L	P	U
FDS16. 45 45	$871	1379	871

	L	P	U
FDE16. 45 45	—	$1588	—

Step 6. Power Access Cutout

NNN no cutout +$0

Step 7.

Top Finish

For high-pressure laminate top/thermoplastic edge (L) or high-pressure laminate/universal edge (U)

125	natural maple (CP) A	+$0
126	natural cherry (CP) A	+$0
127	walnut (CP) A	+$0
139	light ash (CP) A	+$0
140	warm ash (CP) A	+$0
UBK	ultra black (CP) A	+$0
8Q	folkstone grey (CP)	+$0
91	white (CP)	+$0
98	studio white (CP)	+$0
CL	cool grey neutral	+$0
HF	inner tone light	+$0
LU	soft white	+$0
WL	warm stone (CP)	+$0
WN	warm grey neutral	+$0
76	light brown walnut	+$0
HP	light anigre	+$0
LBA	clear on ash (CP)	+$0
LBR	phantom ecru	+$0
LBS	phantom cocoa	+$0
LBU	medium matte walnut (CP)	+$0
LBV	warm grey teak	+$0
LBB	oak on ash (CP)	+$0
LBC	walnut on ash (CP)	+$0
LBF	neutral twill	+$0
LBJ	graphite twill	+$0
LBQ	white twill	+$0

Top/Edge Finish: Opaque Formcoat®

For painted Formcoat® top/edge (P)

8Q	folkstone grey (CP) A	+$0
91	white (CP) A	+$0
LU	soft white A	+$0

Step 8. Edge Finish

For high-pressure laminate top/thermoplastic edge (L)

125	natural maple (CP) A	+$0
126	natural cherry (CP) A	+$0
127	walnut (CP) A	+$0
139	light ash (CP) A	+$0
140	warm ash (CP) A	+$0
G1	graphite (CP) A	+$0
UBK	ultra black (CP) A	+$0
76	light brown walnut	+$0
8Q	folkstone grey (CP)	+$0
91	white (CP)	+$0
98	studio white (CP)	+$0
CL	cool grey neutral	+$0
LBA	clear on ash (CP)	+$0
LBR	phantom ecru	+$0
LBS	phantom cocoa	+$0
LBU	medium matte walnut (CP)	+$0
LBV	warm grey teak	+$0
LBB	oak on ash (CP)	+$0
LBC	walnut on ash (CP)	+$0
LBF	neutral twill	+$0
LBJ	graphite twill	+$0
LBQ	white twill	+$0
WL	warm stone (CP)	+$0
WN	warm grey neutral	+$0
HF	inner tone light	+$0
HP	light anigre	+$0
LU	soft white	+$0

For high-pressure laminate/universal edge (U)

PLY	plywood edge	+$50

Secondary Surface

FDE10.
FDS10.

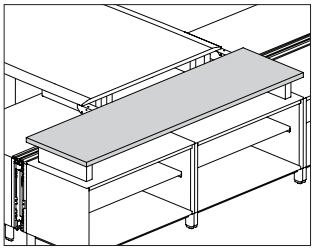

Product Information

Description

This surface spans and is supported by Canvas low storage. It has a laminate top and thermoplastic edge, laminate top with a thermoplastic backed plywood edge, veneer top and edge, or painted Formcoat® top and edge. Laminate surfaces are 1¼″ thick. Painted Formcoat surfaces are 1″ thick.

Notes

Surface is supported by a low credenza with 4″ foot and thin top. Specify 2 surface support, low credenza, adjustable height (FT299.), or 2 surface support, low credenza, fixed height (FT298.), 1 for each end of the secondary surface.

Power access cutout options (CAC, LAC, RAC) accept the Logic G1000 grommet mounted electrical distributor, 6-receptacle unit (Y1425.D or Y1425.G), ordered separately.

Dimensions

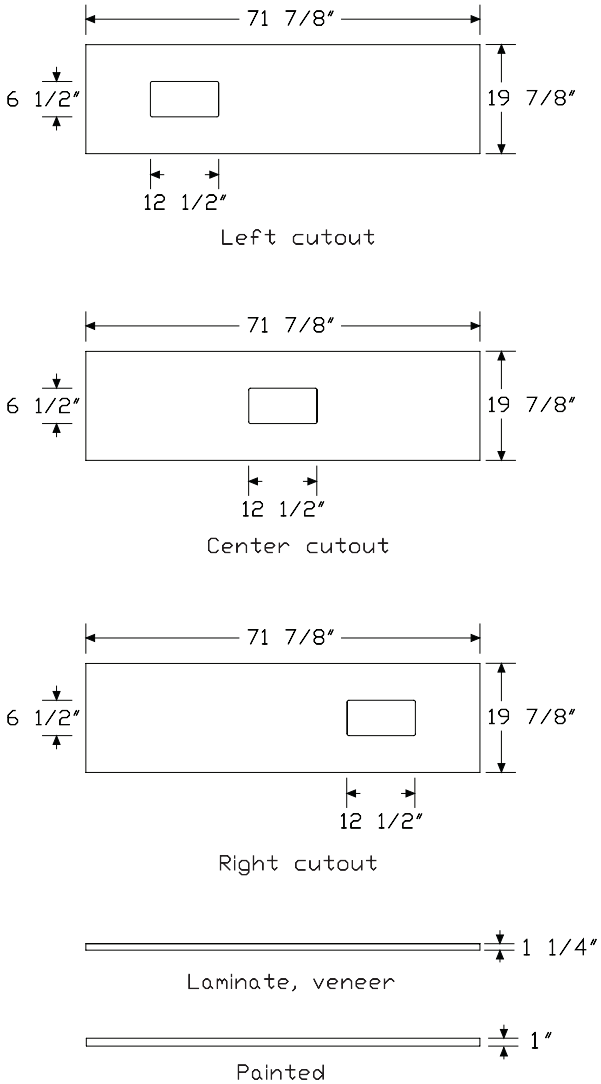

Specification Information

Step 1.

FD A

Step 2. Edge

S10. squared-edge A
E10. eased-edge A

Step 3. Depth

20 20″ deep A

Step 4. Width

36 36″ wide A
72 72″ wide A

Step 5. Surface Material

For squared-edge (S10.)

L high-pressure laminate top/thermoplastic edge A
W veneer A
P painted Formcoat® top/edge A
U high-pressure laminate/universal edge A

For eased-edge (E10.)

P painted Formcoat® top/edge A

Step 6. Attachment

S for use with low storage A

Prices for Steps 1-6.

		LS	WS	PS	US
FDS10. 20	**36**	$341	729	853	341
	72	$674	1429	1470	674
FDE10. 20	**36**	—	—	$930	—
	72	—	—	$1688	—

Step 7. Power Access Cutout

For 36″ wide (36)

NNN no cutout +$0
CAC center cutout +$75

For 72″ wide (72)

NNN no cutout +$0
CAC center cutout +$75
LAC left cutout +$75
RAC right cutout +$75

Step 8.

Top Finish

For high-pressure laminate top/thermoplastic edge (L) or high-pressure laminate/universal edge (U)

125 natural maple (CP) A +$0
126 natural cherry (CP) A +$0
127 walnut (CP) A +$0
139 light ash (CP) A +$0
140 warm ash (CP) A +$0
UBK ultra black (CP) A +$0
8Q folkstone grey (CP) +$0
91 white (CP) +$0
98 studio white (CP) +$0
CL cool grey neutral +$0
HF inner tone light +$0
LU soft white +$0
WL warm stone (CP) +$0
WN warm grey neutral +$0
76 light brown walnut +$0
HP light anigre +$0
LBA clear on ash (CP) +$0
LBR phantom ecru +$0
LBS phantom cocoa +$0
LBU medium matte walnut (CP) +$0
LBV warm grey teak +$0
LBB oak on ash (CP) +$0
LBC walnut on ash (CP) +$0
LBF neutral twill +$0
LBJ graphite twill +$0
LBQ white twill +$0

Top/Edge Finish: Wood Veneer

For veneer (W)

2U	light brown walnut A	+$85
40	dark brown walnut A	+$85
CHD	noble cherry A	+$85
ET	clear on ash A	+$85
EU	oak on ash A	+$85
EV	walnut on ash A	+$85
EW	medium matte walnut A	+$85
UL	natural maple A	+$85
WHN	natural white oak A	+$85

Top/Edge Finish: Opaque Formcoat®

For painted Formcoat® top/edge (P)

8Q	folkstone grey (CP) A	+$0
91	white (CP) A	+$0
LU	soft white A	+$0

Step 9. Edge Finish

For high-pressure laminate top/thermoplastic edge (L)

125	natural maple (CP) A	+$0
126	natural cherry (CP) A	+$0
127	walnut (CP) A	+$0
139	light ash (CP) A	+$0
140	warm ash (CP) A	+$0
G1	graphite (CP) A	+$0
UBK	ultra black (CP) A	+$0
76	light brown walnut	+$0
8Q	folkstone grey (CP)	+$0
91	white (CP)	+$0
98	studio white (CP)	+$0
CL	cool grey neutral	+$0
LBA	clear on ash (CP)	+$0
LBR	phantom ecru	+$0
LBS	phantom cocoa	+$0
LBU	medium matte walnut (CP)	+$0
LBV	warm grey teak	+$0
LBB	oak on ash (CP)	+$0
LBC	walnut on ash (CP)	+$0
LBF	neutral twill	+$0
LBJ	graphite twill	+$0
LBQ	white twill	+$0
WL	warm stone (CP)	+$0
WN	warm grey neutral	+$0
HF	inner tone light	+$0
HP	light anigre	+$0
LU	soft white	+$0

For high-pressure laminate/universal edge (U)

PLY	plywood edge	+$50

Rectangular Surface

FTE10.
FTS10.
FTT10.

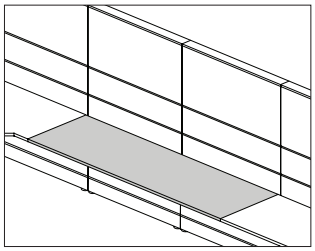

Product Information

Description

This surface hangs from a frame, wall strips, or attaches to various support components to create a freestanding rectangular desk. It has a laminate top and thermoplastic edge, laminate top with a thermoplastic backed plywood edge, veneer top and edge, or painted top and edge. Laminate and veneer surfaces are 1¼″ thick. Painted Formcoat® surfaces are 1″ thick. When hanging from a frame or wall strips there is a 1″ gap at the back of the surface for standard plug head and cord passage.

Notes

MicrobeCare™ is an antimicrobial coating applied to the laminate or veneer surface of this product.

MicrobeCare™ protects products from mold, mildew, algae, and bacteria that cause deterioration, discoloration, odors, and stains.

MicrobeCare™ is registered with the US Environmental Protection Agency (EPA).

For additional size, shape, cable management, and finish options, see Vary Easy Program in Appendices.

For surface attachment bracket (D) option:
- Ganging brackets are included for using the surface as a bridge.
- Surface will only attach to front edge of squared-edge surfaces or the transition portion of the thin-edge or eased-edge surfaces.

For Canvas frame attached surface (F) option:
- Order appropriate supports separately; 2 supports are required for each surface (left and right side):
  - Open support, tapered foot, frame attached (FT294.)
  - Open support, architectural foot, frame attached (FT2A1.)
  - Support panel, tapered foot, frame attached (FT291.)
  - Universal post leg, frame attached (FT2B1.)
  - Surface cantilever (FT290.)
  - Surface support rail (FT295.)
  - Support pedestal
- Center supports are included for surfaces 54″ wide and wider.

For no brackets, for freestanding or use with low credenza (S) option:
- Order the following support products separately:
  - Closed support leg (FV2E2.)
  - Open support leg, architectural foot (FV2A2.)
  - Square open support leg (FV2D2.)
  - Support leg, post (FV689.)
  - Universal post leg (FT2B2.)
  - Surface ganging bracket (FT29B.)
  - Surface support, low credenza, adjustable height (FT299.)
  - Surface support, low credenza, fixed height (FT298.)
  - Surface-attached pedestal
- When creating a freestanding desk with closed support leg (FV2E2.), a modesty panel (FV697.) is required for stability.

Thin-edge surfaces do not work with the following:
- Surface-attached pedestal
- Support pedestal
- Closed support leg (FV2E2.)
- Square open support leg (FV2D2.)

Stiffener (FV696.) is required for any laminate or veneer surface 54″ wide or wider and painted formcoat surfaces 48″ wide or wider that cannot use a center cantilever. See Canvas Office Landscape® Planning Guide for specific stiffener guidelines.

Dimensions

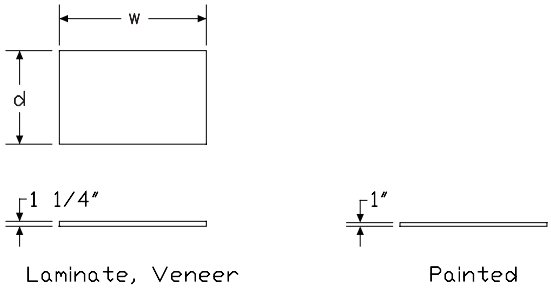

Specification Information

Step 1.

FT

Step 2. Edge

S10. squared-edge
T10. thin-edge
E10. eased-edge

Step 3. Depth

For squared-edge (S10.)

20 20″ deep
24 24″ deep
30 30″ deep
36 36″ deep

For thin-edge (T10.) or eased-edge (E10.)

24 24″ deep
30 30″ deep
36 36″ deep

Step 4. Width

For 20″ deep (20), 24″ deep (24), or 30″ deep (30)

24 24″ wide
30 30″ wide
36 36″ wide
42 42″ wide
48 48″ wide
54 54″ wide
60 60″ wide
66 66″ wide
72 72″ wide
78 78″ wide
84 84″ wide
90 90″ wide
96 96″ wide

For 36″ deep (36)

60 60″ wide A
66 66″ wide A
72 72″ wide A
78 78″ wide A
84 84″ wide A
90 90″ wide A
96 96″ wide A

Step 5. Surface Material

For squared-edge (S10.)

J thermally-fused laminate top/thermoplastic edge with MicrobeCare™ A
M thermally-fused laminate top/thermoplastic edge
T thermally-fused laminate top/universal edge A
L high-pressure laminate top/thermoplastic edge
W veneer top/veneer edge A
P painted Formcoat® top/edge
U high-pressure laminate/universal edge A
A high-pressure laminate top/thermoplastic edge with MicrobeCare™ A

For thin-edge (T10.)

L high-pressure laminate top/thermoplastic edge
W veneer top/veneer edge A
P painted Formcoat® top/edge
A high-pressure laminate top/thermoplastic edge with MicrobeCare™ A

For eased-edge (E10.)

P painted Formcoat® top/edge

Step 6. Attachment Bracket

For 20″ deep (20) with 24″ wide (24), 30″ wide (30), 66″ wide (66), 72″ wide (72), 78″ wide (78), 84″ wide (84), 90″ wide (90), or 96″ wide (96)

F Canvas frame attached surface

For 20″ deep (20) with 36″ wide (36), 42″ wide (42), 48″ wide (48), 54″ wide (54), or 60″ wide (60)

D surface attachment bracket
F Canvas frame attached surface

For 24″ deep (24) or 30″ deep (30) with 24″ wide (24) or 30″ wide (30)

F Canvas frame attached surface
S no brackets, for freestanding or use with low credenza

For 24″ deep (24) or 30″ deep (30) with 36″ wide (36), 42″ wide (42), 48″ wide (48), or 54″ wide (54)

D surface attachment bracket
F Canvas frame attached surface
S no brackets, for freestanding or use with low credenza

For 24″ deep (24) or 30″ deep (30) with 60″ wide (60)

D	surface attachment bracket
F	Canvas frame attached surface
S	no brackets, for freestanding or use with low credenza

For 24″ deep (24) or 30″ deep (30) with 66″ wide (66), 72″ wide (72), 78″ wide (78), 84″ wide (84), 90″ wide (90), or 96″ wide (96)

F	Canvas frame attached surface
S	no brackets, for freestanding or use with low credenza

For 36″ deep (36) with 60″ wide (60), 66″ wide (66), 72″ wide (72), 78″ wide (78), 84″ wide (84), 90″ wide (90), or 96″ wide (96)

S	no brackets, for freestanding or use with low credenza

Prices for Steps 1-6.

			JD	JF	JS	MD	MF	MS
FTS10.	**20**	**24**	—	$352	—	—	272	—
		30	—	$384	—	—	304	—
		36	$407	422	—	329	341	—
		42	$443	461	—	363	383	—
		48	$487	501	—	396	409	—
		54	$567	580	—	475	489	—
		60	$618	632	—	527	541	—
		66	—	$657	—	—	566	—
		72	—	$680	—	—	591	—
		78	—	$725	—	—	623	—
		84	—	$796	—	—	692	—
		90	—	$817	—	—	713	—
		96	—	$847	—	—	743	—
	24	**24**	—	$352	286	—	272	208
		30	—	$384	323	—	304	243
		36	$407	422	360	329	341	280
		42	$443	461	396	363	383	317
		48	$494	508	446	401	417	355
		54	$567	580	519	475	489	427
		60	$625	642	562	533	549	471
		66	—	$689	620	—	597	528
		72	—	$713	644	—	622	552
		78	—	$748	679	—	646	576
		84	—	$796	743	—	692	640
		90	—	$817	750	—	713	647
		96	—	$847	752	—	743	650
	30	**24**	—	$376	314	—	298	235
		30	—	$450	387	—	369	307
		36	$492	508	444	412	429	364
		42	$532	545	492	454	467	412
		48	$568	580	528	476	489	435
		54	$674	689	620	581	597	528
		60	$698	713	644	606	622	552
		66	—	$784	715	—	692	624
		72	—	$838	770	—	746	678
		78	—	$901	848	—	798	744
		84	—	$964	896	—	858	792
		90	—	$1011	925	—	909	823
		96	—	$1052	960	—	947	856
	36	**60**	—	—	$792	—	—	701
		66	—	—	$874	—	—	781
		72	—	—	$946	—	—	854
		78	—	—	$968	—	—	864
		84	—	—	$977	—	—	874
		90	—	—	$1035	—	—	932
		96	—	—	$1091	—	—	987

			TD	TF	TS	LD	LF	LS
FTS10.	**20**	**24**	—	$272	—	—	337	—
		30	—	$304	—	—	375	—
		36	$329	341	—	407	422	—
		42	$363	383	—	449	472	—
		48	$396	409	—	490	506	—
		54	$475	489	—	587	603	—
		60	$527	541	—	650	668	—
		66	—	$566	—	—	699	—
		72	—	$591	—	—	728	—
		78	—	$623	—	—	768	—
		84	—	$692	—	—	853	—
		90	—	$713	—	—	879	—
		96	—	$743	—	—	917	—

24	24	—	$272	208	—	337	257
	30	—	$304	243	—	375	299
	36	$329	341	280	407	422	346
	42	$363	383	317	449	472	391
	48	$401	417	355	495	514	438
	54	$475	489	427	587	603	527
	60	$533	549	471	659	678	582
	66	—	$597	528	—	737	651
	72	—	$622	552	—	767	681
	78	—	$646	576	—	797	710
	84	—	$692	640	—	853	788
	90	—	$713	647	—	879	799
	96	—	$743	650	—	917	802
30	24	—	$298	235	—	368	291
	30	—	$369	307	—	456	380
	36	$412	429	364	509	529	450
	42	$454	467	412	559	576	509
	48	$476	489	435	588	603	536
	54	$581	597	528	717	737	651
	60	$606	622	552	748	767	681
	66	—	$692	624	—	853	769
	72	—	$746	678	—	920	837
	78	—	$798	744	—	985	918
	84	—	$858	792	—	1059	977
	90	—	$909	823	—	1121	1015
	96	—	$947	856	—	1169	1056
36	60	—	—	$701	—	—	864
	66	—	—	$781	—	—	963
	72	—	—	$854	—	—	1054
	78	—	—	$864	—	—	1066
	84	—	—	$874	—	—	1078
	90	—	—	$932	—	—	1149
	96	—	—	$987	—	—	1219

		WD	WF	WS	PD	PF	PS
FTS10. 20	24	—	$678	—	—	427	—
	30	—	$738	—	—	479	—
	36	$780	795	—	577	541	—
	42	$838	854	—	619	594	—
	48	$895	911	—	658	656	—
	54	$1128	1147	—	830	773	—
	60	$1188	1206	—	874	861	—
	66	—	$1287	—	—	933	—
	72	—	$1376	—	—	974	—
	78	—	$1488	—	—	1015	—
	84	—	$1604	—	—	1089	—
	90	—	$1676	—	—	1118	—
	96	—	$1726	—	—	1165	—
24	24	—	$703	623	—	427	338
	30	—	$791	710	—	479	393
	36	$856	870	795	626	541	456
	42	$915	931	869	670	594	509
	48	$971	987	929	712	656	566
	54	$1160	1180	1104	856	773	685
	60	$1265	1282	1206	928	861	778
	66	—	$1338	1261	—	963	875
	72	—	$1398	1319	—	1031	939
	78	—	$1488	1422	—	1071	978
	84	—	$1604	1488	—	1111	1019
	90	—	$1676	1548	—	1153	1062
	96	—	$1726	1610	—	1194	1103
30	24	—	$781	702	—	468	380
	30	—	$931	869	—	583	495
	36	$971	987	929	712	673	588
	42	$1030	1046	986	754	758	673
	48	$1120	1137	1068	813	813	743
	54	$1322	1338	1261	970	988	898
	60	$1436	1468	1382	1041	1031	939
	66	—	$1645	1560	—	1084	1011
	72	—	$1763	1679	—	1174	1100
	78	—	$1871	1807	—	1252	1177
	84	—	$1979	1913	—	1349	1275
	90	—	$2077	1985	—	1425	1352
	96	—	$2173	2056	—	1491	1419
36	60	—	—	$1695	—	—	1193
	66	—	—	$1918	—	—	1274
	72	—	—	$2071	—	—	1384
	78	—	—	$2130	—	—	1441
	84	—	—	$2185	—	—	1499
	90	—	—	$2306	—	—	1586
	96	—	—	$2422	—	—	1678

		UD	UF	US	AD	AF	AS
FTS10. 20	**24**	—	$337	—	—	434	—
	30	—	$375	—	—	473	—
	36	$407	422	—	503	520	—
	42	$449	472	—	547	568	—
	48	$490	506	—	601	618	—
	54	$587	603	—	700	716	—
	60	$650	668	—	763	779	—
	66	—	$699	—	—	809	—
	72	—	$728	—	—	839	—
	78	—	$768	—	—	895	—
	84	—	$853	—	—	981	—
	90	—	$879	—	—	1009	—
	96	—	$917	—	—	1045	—
24	**24**	—	$337	257	—	434	353
	30	—	$375	299	—	473	398
	36	$407	422	346	503	520	444
	42	$449	472	391	547	568	490
	48	$495	514	438	609	627	551
	54	$587	603	527	700	716	640
	60	$659	678	582	770	793	693
	66	—	$737	651	—	850	764
	72	—	$767	681	—	879	795
	78	—	$797	710	—	922	838
	84	—	$853	788	—	981	917
	90	—	$879	799	—	1009	926
	96	—	$917	802	—	1045	929
30	**24**	—	$368	291	—	465	388
	30	—	$456	380	—	554	476
	36	$509	529	450	607	627	548
	42	$559	576	509	658	673	607
	48	$588	603	536	701	716	651
	54	$717	737	651	833	850	764
	60	$748	767	681	861	879	795
	66	—	$853	769	—	968	881
	72	—	$920	837	—	1034	950
	78	—	$985	918	—	1111	1046
	84	—	$1059	977	—	1188	1105
	90	—	$1121	1015	—	1247	1143
	96	—	$1169	1056	—	1298	1185
36	**60**	—	—	$864	—	—	977
	66	—	—	$963	—	—	1078
	72	—	—	$1054	—	—	1167
	78	—	—	$1066	—	—	1193
	84	—	—	$1078	—	—	1205
	90	—	—	$1149	—	—	1277
	96	—	—	$1219	—	—	1346

		TD	TF	TS	LD	LF	LS
FTT10. 24	**24**	—	—	—	—	$451	373
	30	—	—	—	—	$507	431
	36	—	—	—	$616	573	497
	42	—	—	—	$657	635	561
	48	—	—	—	$698	698	621
	54	—	—	—	$865	816	743
	60	—	—	—	$907	918	841
	66	—	—	—	—	$966	883
	72	—	—	—	—	$1005	921
	78	—	—	—	—	$1046	978
	84	—	—	—	—	$1154	1091
	90	—	—	—	—	$1189	1124
	96	—	—	—	—	$1239	1177
30	**24**	—	—	—	—	$494	421
	30	—	—	—	—	$621	545
	36	—	—	—	$698	713	641
	42	—	—	—	$770	752	689
	48	—	—	—	$852	794	728
	54	—	—	—	$991	966	883
	60	—	—	—	$1089	1024	958
	66	—	—	—	—	$1154	1088
	72	—	—	—	—	$1245	1182
	78	—	—	—	—	$1331	1266
	84	—	—	—	—	$1433	1367
	90	—	—	—	—	$1512	1447
	96	—	—	—	—	$1585	1523
36	**60**	—	—	—	—	—	$1166
	66	—	—	—	—	—	$1210
	72	—	—	—	—	—	$1262
	78	—	—	—	—	—	$1316
	84	—	—	—	—	—	$1367
	90	—	—	—	—	—	$1447
	96	—	—	—	—	—	$1529

			WD	WF	WS	PD	PF	PS
FTT10.	24	24	—	$899	814	—	457	371
		30	—	$1014	927	—	511	426
		36	$1208	1120	1037	665	578	491
		42	$1317	1235	1151	723	640	553
		48	$1409	1323	1240	791	701	618
		54	$1606	1521	1436	911	822	739
		60	$1791	1706	1623	1008	922	833
		66	—	$1901	1817	—	1027	940
		72	—	$2036	1952	—	1105	1019
		78	—	$2147	2065	—	1204	1118
		84	—	$2236	2153	—	1341	1252
		90	—	$2320	2238	—	1374	1292
		96	—	$2409	2326	—	1437	1352
	30	24	—	$1000	918	—	498	410
		30	—	$1221	1137	—	626	541
		36	$1439	1368	1287	807	718	634
		42	$1525	1513	1430	899	816	726
		48	$1612	1628	1565	994	909	821
		54	$1957	1929	1845	1155	1072	984
		60	$2045	2063	1979	1271	1183	1098
		66	—	$2147	2065	—	1333	1245
		72	—	$2269	2197	—	1441	1357
		78	—	$2409	2339	—	1538	1458
		84	—	$2547	2476	—	1639	1550
		90	—	$2669	2600	—	1697	1608
		96	—	$2795	2724	—	1754	1664
	36	60	—	—	$2514	—	—	1368
		66	—	—	$2600	—	—	1561
		72	—	—	$2706	—	—	1703
		78	—	—	$2824	—	—	1774
		84	—	—	$2940	—	—	1844
		90	—	—	$3093	—	—	1954
		96	—	—	$3244	—	—	2018

			UD	UF	US	AD	AF	AS
FTT10.	24	24	—	—	—	—	$545	468
		30	—	—	—	—	$601	526
		36	—	—	—	$711	667	592
		42	—	—	—	$751	728	655
		48	—	—	—	$807	807	728
		54	—	—	—	$977	925	852
		60	—	—	—	$1016	1027	951
		66	—	—	—	—	$1074	991
		72	—	—	—	—	$1115	1030
		78	—	—	—	—	$1169	1100
		84	—	—	—	—	$1276	1215
		90	—	—	—	—	$1312	1247
		96	—	—	—	—	$1362	1300
	30	24	—	—	—	—	$591	513
		30	—	—	—	—	$714	640
		36	—	—	—	$793	808	738
		42	—	—	—	$863	847	783
		48	—	—	—	$959	902	838
		54	—	—	—	$1100	1074	991
		60	—	—	—	$1198	1131	1068
		66	—	—	—	—	$1262	1196
		72	—	—	—	—	$1353	1291
		78	—	—	—	—	$1454	1391
		84	—	—	—	—	$1555	1490
		90	—	—	—	—	$1636	1570
		96	—	—	—	—	$1709	1646
	36	60	—	—	—	—	—	$1276
		66	—	—	—	—	—	$1320
		72	—	—	—	—	—	$1370
		78	—	—	—	—	—	$1439
		84	—	—	—	—	—	$1490
		90	—	—	—	—	—	$1570
		96	—	—	—	—	—	$1652

		WD	WF	WS	PD	PF	PS
FTE10. 24	**24**	—	—	—	—	$471	382
	30	—	—	—	—	$533	440
	36	—	—	—	$687	596	508
	42	—	—	—	$750	659	567
	48	—	—	—	$818	728	640
	54	—	—	—	$940	851	761
	60	—	—	—	$1042	955	864
	66	—	—	—	—	$1064	974
	72	—	—	—	—	$1140	1053
	78	—	—	—	—	$1245	1159
	84	—	—	—	—	$1384	1295
	90	—	—	—	—	$1422	1337
	96	—	—	—	—	$1482	1394
30	**24**	—	—	—	—	$515	429
	30	—	—	—	—	$651	558
	36	—	—	—	$833	744	656
	42	—	—	—	$929	842	752
	48	—	—	—	$1027	938	850
	54	—	—	—	$1196	1106	1014
	60	—	—	—	$1315	1228	1137
	66	—	—	—	—	$1380	1292
	72	—	—	—	—	$1489	1401
	78	—	—	—	—	$1582	1492
	84	—	—	—	—	$1639	1550
	90	—	—	—	—	$1697	1608
	96	—	—	—	—	$1754	1664
36	**60**	—	—	—	—	—	$1417
	66	—	—	—	—	—	$1616
	72	—	—	—	—	—	$1764
	78	—	—	—	—	—	$1833
	84	—	—	—	—	—	$1903
	90	—	—	—	—	—	$1962
	96	—	—	—	—	—	$2018

Step 7.

Top Finish

For high-pressure laminate top/thermoplastic edge (L), high-pressure laminate top/thermoplastic edge with MicrobeCare™ (A), or high-pressure laminate/universal edge (U)

125	natural maple (CP)	+$0
126	natural cherry (CP)	+$0
127	walnut (CP)	+$0
139	light ash (CP)	+$0
140	warm ash (CP)	+$0
UBK	ultra black (CP)	+$0
8Q	folkstone grey (CP)	+$0
91	white (CP)	+$0
98	studio white (CP)	+$0
CL	cool grey neutral	+$0
HF	inner tone light A	+$0
LU	soft white	+$0
WL	warm stone (CP)	+$0
WN	warm grey neutral	+$0
76	light brown walnut	+$0
HP	light anigre	+$0
LBA	clear on ash (CP)	+$0
LBR	phantom ecru	+$0
LBS	phantom cocoa	+$0
LBU	medium matte walnut (CP)	+$0
LBV	warm grey teak	+$0
LBB	oak on ash (CP)	+$0
LBC	walnut on ash (CP)	+$0
LBF	neutral twill	+$0
LBJ	graphite twill	+$0
LBQ	white twill	+$0

Top Finish

For thermally-fused laminate top/thermoplastic edge with MicrobeCare™ (J), thermally-fused laminate top/thermoplastic edge (M), or thermally-fused laminate top/universal edge (T)

125	natural maple (CP)	+$0
126	natural cherry (CP)	+$0
127	walnut (CP)	+$0
139	light ash (CP)	+$0
140	warm ash (CP)	+$0
8Q	folkstone grey (CP)	+$0
91	white (CP)	+$0
98	studio white (CP)	+$0
LBA	clear on ash (CP)	+$0
LBB	oak on ash (CP)	+$0
LBC	walnut on ash (CP)	+$0
LBF	neutral twill	+$0
LBQ	white twill	+$0
LBU	medium matte walnut (CP) A	+$0

Top/Edge Finish: Wood Veneer

For veneer top/veneer edge (W)

2U	light brown walnut A	+$85
40	dark brown walnut A	+$85
CHD	noble cherry A	+$85
ET	clear on ash A	+$85
EU	oak on ash A	+$85
EV	walnut on ash A	+$85
EW	medium matte walnut A	+$85
UL	natural maple A	+$85
WHN	natural white oak A	+$85

Top/Edge Finish: Opaque Formcoat®

For painted Formcoat® top/edge (P)

8Q	folkstone grey (CP)	+$0
91	white (CP)	+$0
LU	soft white	+$0

Step 8. Edge Finish

For thermally-fused laminate top/thermoplastic edge with MicrobeCare™ (J), thermally-fused laminate top/thermoplastic edge (M), high-pressure laminate top/thermoplastic edge (L), or high-pressure laminate top/thermoplastic edge with MicrobeCare™ (A)

125	natural maple (CP)	+$0
126	natural cherry (CP)	+$0
127	walnut (CP)	+$0
139	light ash (CP)	+$0
140	warm ash (CP)	+$0
G1	graphite (CP)	+$0
UBK	ultra black (CP)	+$0
76	light brown walnut	+$0
8Q	folkstone grey (CP)	+$0
91	white (CP)	+$0
98	studio white (CP)	+$0
CL	cool grey neutral	+$0
LBA	clear on ash (CP)	+$0
LBR	phantom ecru	+$0
LBS	phantom cocoa	+$0
LBU	medium matte walnut (CP)	+$0
LBV	warm grey teak	+$0
LBB	oak on ash (CP)	+$0
LBC	walnut on ash (CP)	+$0
LBF	neutral twill	+$0
LBJ	graphite twill	+$0
LBQ	white twill	+$0
WL	warm stone (CP)	+$0
WN	warm grey neutral	+$0
HF	inner tone light	+$0
HP	light anigre	+$0
LU	soft white	+$0

For thermally-fused laminate top/universal edge (T) or high-pressure laminate/universal edge (U)

PLY	plywood edge A	+$50

Dock to Surface Tethers FD290.

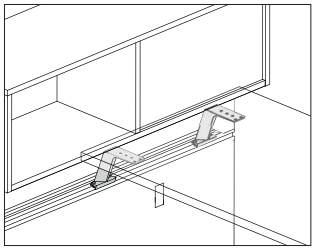

Product Information

Description

This bracket supports and attaches a work surface to the dock and positions the surface at 28½″ high. Surfaces can be placed parallel or perpendicular to the dock. Includes 1 tether and attachment hardware.

Notes

For surfaces up to and including 48″ wide, 2 tethers are required.

For surfaces 54″ wide and wider, 3 tethers are required.

Dock to surface tethers are always used in conjunction with floor supports such as the universal post leg (FT2B2., FD2B2.), ordered separately.

Dimensions

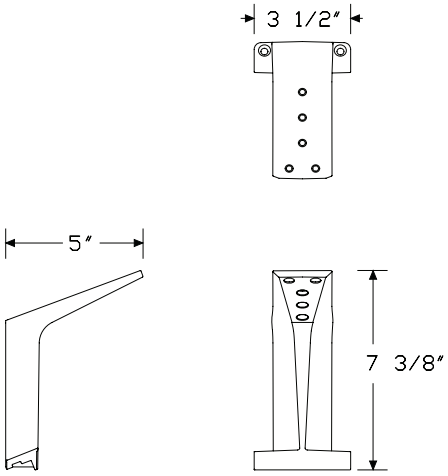

Specification Information

Step 1.

FD290. A		$167

Step 2. Surface Finish

Metallic Paint		
613	silver (CP) A	+$0
SNA	satin aluminum	+$10
SNB	satin bronze	+$10
SNC	satin carbon	+$10

Sand Texture Paint		
UBK	ultra black (CP) A	+$0
8Q	folkstone grey (CP)	+$0
91	white (CP)	+$0
98	studio white (CP)	+$0
BK	black	+$0
G1	graphite (CP)	+$0
WL	warm stone (CP)	+$0

Surface Ganging Bracket FT29B.

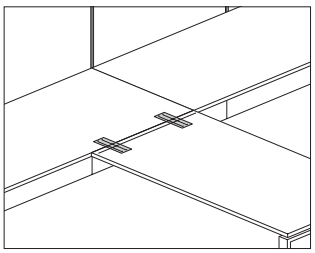

Product Information

Description

This bracket connects one side of a square-edge surface to another square-edge surface in line or at a right angle.

Notes

For freestanding surface applications, when attaching 2 rectangular surfaces perpendicular to each other or when attaching a rectangular surface perpendicular to the squared-edge portion of a rectangular transition surface specify the pair version (FT29B.2).

When attaching freestanding surfaces next to each other in a straight line with a shared leg supporting the back portion of the surfaces, specify the single version (FT29B.1).

Dimensions

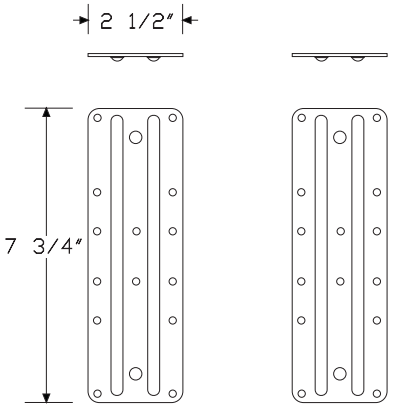

Specification Information

Step 1.

FT29B.

Step 2. Type

1	single
2	pair

Prices for Steps 1-2.

FT29B.	**1**	$37
	2	$63

Universal Post Leg FT2B2.

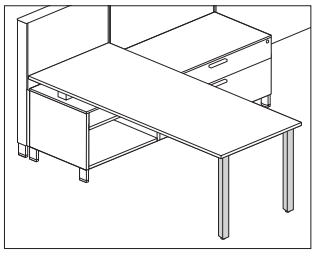

Product Information

Description

This leg is available as a single leg to support 1 corner of a surface, or as a pair to support 1 end of a surface. The fixed-height leg has a 2″ leveling range, allowing a surface height of 28½″-30½″. The adjustable-height leg is adjustable over a 6″ range, allowing a surface height of 25½″-31½″. Attachment hardware included.

Dimensions

Fixed Height

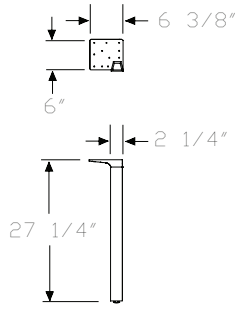

Adjustable Height

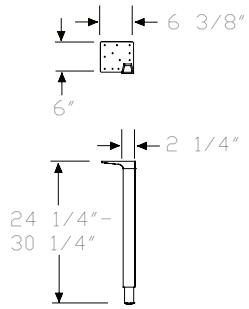

Specification Information

Step 1.

FT2B2.

Step 2. Leg Type

F	fixed height
A	adjustable height

Step 3. Position

L	left-hand, single leg
R	right-hand, single leg
P	left-hand & right-hand, pair

Prices for Steps 1-3.

		L	R	P
FT2B2.	**F**	$566	566	1121
	A	$604	604	1203

Step 4. Leg Body Finish

Sand Texture Paint

For left-hand, single leg (L) or right-hand, single leg (R)

UBK	ultra black (CP)	+$0
8Q	folkstone grey (CP)	+$0
91	white (CP)	+$0
98	studio white (CP)	+$0
BK	black	+$0
G1	graphite (CP)	+$0
WL	warm stone (CP)	+$0

Metallic Paint

For left-hand, single leg (L) or right-hand, single leg (R)

613	silver (CP)	+$0

Sand Texture Paint

For left-hand & right-hand, pair (P)

UBK	ultra black (CP) A	+$0
8Q	folkstone grey (CP) A	+$0
91	white (CP) A	+$0
98	studio white (CP) A	+$0
BK	black A	+$0
G1	graphite (CP) A	+$0
WL	warm stone (CP) A	+$0

Metallic Paint

For left-hand & right-hand, pair (P)

613	silver (CP)	+$0
SNA	satin aluminum	+$10
SNB	satin bronze	+$10
SNC	satin carbon	+$10

Step 5. Leg Face Finish

Sand Texture Paint

For left-hand, single leg (L) or right-hand, single leg (R)

BK	black	+$0
UBK	ultra black (CP)	+$0

Smooth Paint

For left-hand, single leg (L) or right-hand, single leg (R)

G1	graphite (CP)	+$0
8Q	folkstone grey (CP)	+$0
91	white (CP)	+$0
98	studio white (CP)	+$0
WL	warm stone (CP)	+$0

Metallic Paint

For left-hand, single leg (L) or right-hand, single leg (R)

613	silver (CP)	+$0

Anodized

For left-hand, single leg (L) or right-hand, single leg (R)

AN	clear anodized aluminum	+$10

Sand Texture Paint

For left-hand & right-hand, pair (P)

BK	black	+$0
UBK	ultra black (CP)	+$0

Smooth Paint

For left-hand & right-hand, pair (P)

G1	graphite (CP)	+$0
8Q	folkstone grey (CP)	+$0
91	white (CP)	+$0
98	studio white (CP)	+$0
WL	warm stone (CP)	+$0

Metallic Paint

For left-hand & right-hand, pair (P)

613	silver (CP)	+$0
SNA	satin aluminum	+$10
SNB	satin bronze	+$10
SNC	satin carbon	+$10

Anodized

For left-hand & right-hand, pair (P)

AN	clear anodized aluminum	+$20

Universal Post Leg, Shared FD2B2.

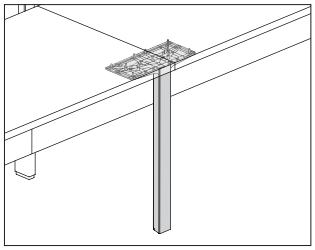

Product Information

Description

This single leg supports the front corner edges of 2 adjacent surfaces. It has 2″ of leveling adjustment. Attachment hardware included.

Dimensions

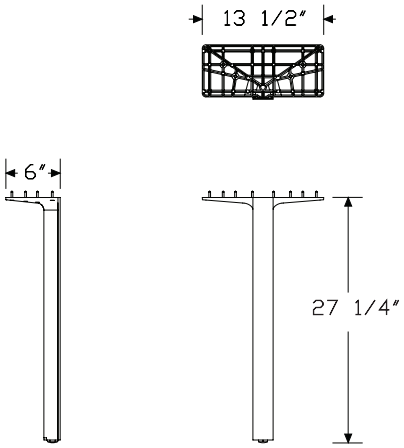

Specification Information

Step 1.

FD2B2. A

Step 2. Leg Type

F	fixed height

Step 3. Position

S	shared, single leg

Prices for Steps 1-3.

		S
FD2B2.	**F**	$766

Step 4. Leg Body Finish

Metallic Paint		
613	silver (CP) A	+$0
SNA	satin aluminum	+$10
SNB	satin bronze	+$10
SNC	satin carbon	+$10

Sand Texture Paint		
91	white (CP)	+$0
BK	black	+$0
G1	graphite (CP)	+$0
UBK	ultra black (CP) A	+$0

Step 5. Leg Face Finish

Sand Texture Paint		
BK	black	+$0
UBK	ultra black (CP) A	+$0

Smooth Paint		
8Q	folkstone grey (CP)	+$0
91	white (CP)	+$0
98	studio white (CP)	+$0
G1	graphite (CP) A	+$0
WL	warm stone (CP)	+$0

Metallic Paint		
613	silver (CP) A	+$0

Anodized		
AN	clear anodized aluminum	+$10

Support Leg, Post FV689.

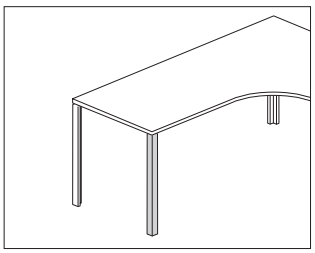

Product Information

Description

This single painted leg supports a desk or return and includes a glide with 1½″ leveling range. Specify 2 legs to support one end of a surface. Attachment hardware included.

Dimensions

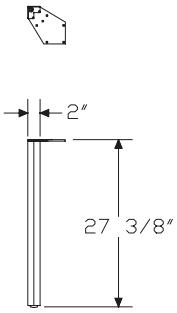

Specification Information

Step 1.

FV689.P	$241

Step 2. Surface Finish

Sand Texture Paint		
UBK	ultra black (CP)	+$0
8Q	folkstone grey (CP)	+$0
91	white (CP)	+$0
98	studio white (CP)	+$0
BK	black	+$0
CL	cool grey neutral	+$0
G1	graphite (CP)	+$0
WL	warm stone (CP)	+$0
WN	warm grey neutral	+$0

Metallic Paint		
611	beige mist metallic (CP)	+$0
613	silver (CP)	+$0
EH	metallic bronze	+$0
SNA	satin aluminum	+$10
SNB	satin bronze	+$10
SNC	satin carbon	+$10

Column Kit, Dock Peninsula Surface FD235.

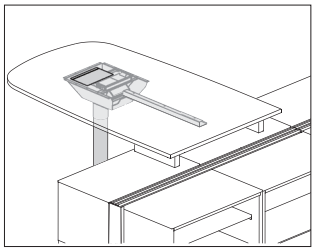

Product Information

Description

This column kit attaches to and supports the end of a peninsula surface. It has a 10′ power cord with 3-prong plug end. Column kit includes a grommet and technology well that has 2 power receptacles and 2 data openings. Glides allow 2″ of leveling adjustment.

Notes

When hardwiring is required, specify powered (P) option for power/data access.

Dimensions

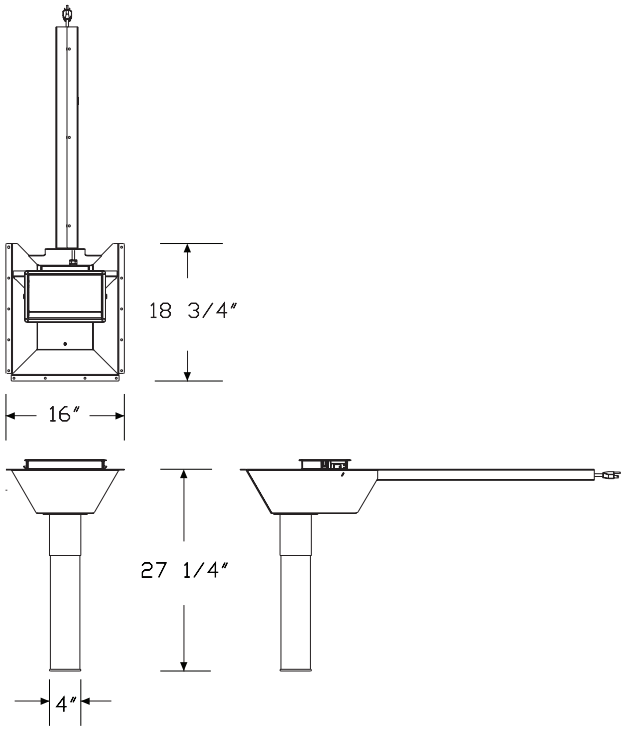

Specification Information

Step 1.

FD235. A

Step 2. Application

DS	dock supported - Canvas dock
SS	storage supported - Canvas credenza

Step 3. Power/Data Access

A	modular power cord w/ plug end
P	conduit with open end for hardwiring

Prices for Steps 1-3.

		A	P
FD235.	**DS**	$3554	3554
	SS	$3554	3554

Step 4. Grommet Finish

613	silver (CP) A	+$0
91	white (CP)	+$0
98	studio white (CP)	+$0
BK	black	+$0
G1	graphite (CP)	+$0
UBK	ultra black (CP) A	+$0

Step 5. Column/Bin Finish

Sand Texture Paint

8Q	folkstone grey (CP)	+$0
91	white (CP)	+$0
98	studio white (CP)	+$0
BK	black	+$0
CL	cool grey neutral	+$0
G1	graphite (CP)	+$0
UBK	ultra black (CP) A	+$0
WL	warm stone (CP)	+$0
WN	warm grey neutral	+$0

Metallic Paint

611	beige mist metallic (CP) A	+$0
613	silver (CP) A	+$0
EH	metallic bronze	+$0
SNA	satin aluminum	+$10
SNB	satin bronze	+$10
SNC	satin carbon	+$10

Square Open Support Leg FV2D2.

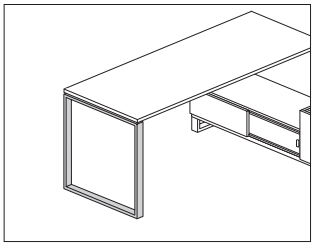

Product Information

Description

This individual leg supports 1 end of a surface or joins 2 surfaces end-to-end, providing shared support at the surface joint. It has leveling glides with 1½″ of adjustment. Attachment hardware included.

Notes

When leg is supporting the end of a squared- or eased-edge surface, depth of support leg must match depth of surface. Support leg does not work with thin-edge surfaces in this position.

When leg is supporting the joint between 2 surfaces, specify leg as follows:

Surface Depth—Leg Depth

24″ deep surface—12″ deep leg

30″ deep surface—24″ deep leg

36″ deep surface—24″ deep leg

Dimensions

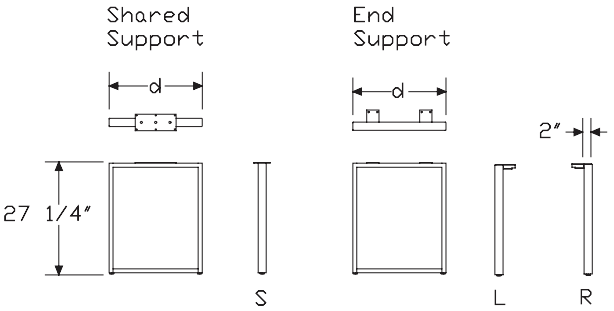

Specification Information

Step 1.

FV2D2.

Step 2. Surface Edge Type

S for squared edge surface

Step 3. Depth

2A 12″ deep, shared
2B 24″ deep, shared
24 24″ deep
30 30″ deep
36 36″ deep

Step 4. Leg Type

F fixed height

Step 5. Position

For 12″ deep, shared (2A) or 24″ deep, shared (2B)

S shared

For 24″ deep (24), 30″ deep (30), or 36″ deep (36)

L left
R right

Prices for Steps 1-5.

		FL	FS	FR
FV2D2. S	**2A**	—	$322	—
	2B	—	$492	—
	24	$492	—	492
	30	$509	—	509
	36	$520	—	520

Step 6. Surface Finish

Sand Texture Paint

UBK	ultra black (CP)	+$0
8Q	folkstone grey (CP)	+$0
91	white (CP)	+$0
98	studio white (CP)	+$0
BK	black	+$0
CL	cool grey neutral	+$0
G1	graphite (CP)	+$0
WL	warm stone (CP)	+$0
WN	warm grey neutral	+$0

Metallic Paint		
611	beige mist metallic (CP)	+$0
613	silver (CP)	+$0
EH	metallic bronze	+$0
SNA	satin aluminum	+$10
SNB	satin bronze	+$10
SNC	satin carbon	+$10

Open Support Leg, Architectural Foot FV2A2.

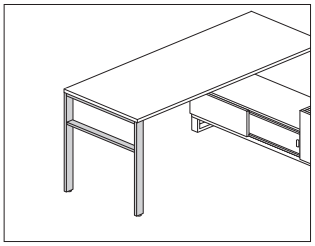

Product Information

Description

This individual leg supports 1 end of a surface or joins 2 surfaces end-to-end, providing shared support at the surface joint. The fixed height leg has a 2″ leveling range allowing a surface height of 28½″-30½″. The adjustable height leg has a 6″ adjustment range in 1″ increments allowing a surface height of 25½″-31½″. Attachment hardware included.

Notes

When leg is supporting the end of a surface, depth of support leg must match depth of surface.

When leg is supporting the joint between 2 surfaces, specify leg as follows:

Surface Depth—Leg Depth

24″ deep surface—12″ deep leg

30″ deep surface—24″ deep leg

36″ deep surface—24″ deep leg

See planning guide for support rules.

Dimensions

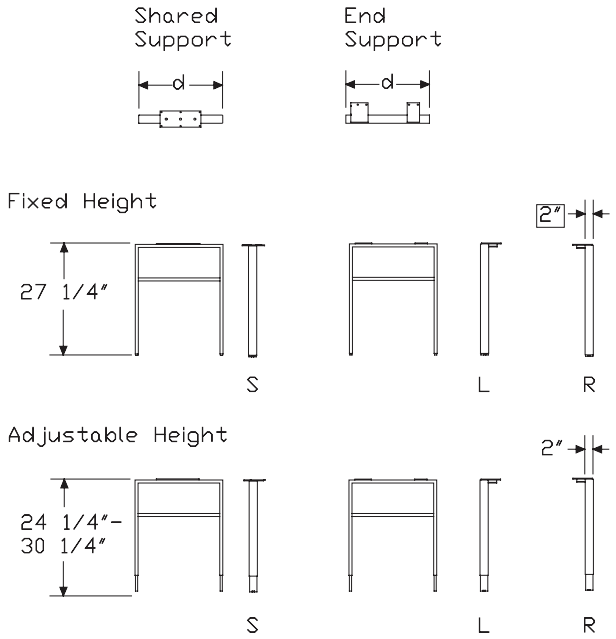

Specification Information

Step 1.

FV2A2.

Step 2. Depth

2A	12″ deep, shared
2B	24″ deep, shared
24	24″ deep
30	30″ deep
36	36″ deep

Step 3. Leg Type

F	fixed height
A	adjustable height

Step 4. Position

For 12″ deep, shared (2A) or 24″ deep, shared (2B)

S	shared

For 24″ deep (24), 30″ deep (30), or 36″ deep (36)

L	left
R	right

Prices for Steps 1-4.

			L	S	R
FV2A2.	**2A**	**F**	—	$393	—
		A	—	$517	—
	2B	**F**	—	$641	—
		A	—	$765	—
	24	**F**	$641	—	641
		A	$765	—	765
	30	**F**	$672	—	672
		A	$800	—	800
	36	**F**	$706	—	706
		A	$834	—	834

Step 5. Surface Finish

Sand Texture Paint		
UBK	ultra black (CP)	+$0
8Q	folkstone grey (CP)	+$0
91	white (CP)	+$0
98	studio white (CP)	+$0
BK	black	+$0
CL	cool grey neutral	+$0
G1	graphite (CP)	+$0
WL	warm stone (CP)	+$0
WN	warm grey neutral	+$0

Metallic Paint		
611	beige mist metallic (CP)	+$0
613	silver (CP)	+$0
SNA	satin aluminum	+$10
SNB	satin bronze	+$10
SNC	satin carbon	+$10
EH	metallic bronze	+$0

Closed Support Leg FV2E2.

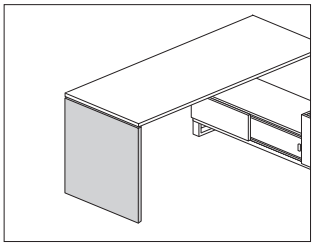

Product Information

Description

This individual solid panel leg supports 1 end of a surface or joins 2 surfaces end-to-end, providing shared support at the surface joint. It is available as laminate or veneer and has leveling glides with 1½″ of adjustment. Attachment hardware included.

Notes

For additional product options, see Vary Easy Program in Appendices.

Grain direction is vertical on wood-grain laminate and veneer.

When leg is supporting the end of a squared- or eased-edge surface, depth of support leg must match depth of surface. Support leg does not work with thin-edge surfaces in this position.

When leg is supporting the joint between 2 surfaces, specify leg as follows:
Surface Depth—Leg Depth
24″ deep surface—12″ deep leg
30″ deep surface—24″ deep leg
36″ deep surface—24″ deep leg

Dimensions

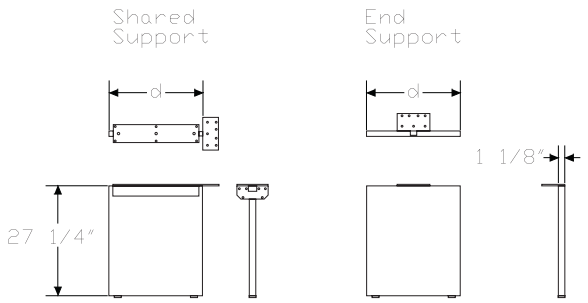

Specification Information

Step 1.

FV2E2.

Step 2. Surface Edge Type

S	for squared edge surface

Step 3. Depth

2A	12″ deep, shared
2B	24″ deep, shared
24	24″ deep
30	30″ deep
36	36″ deep

Step 4. Leg Type

F	fixed height

Step 5. Surface Material

H	high-pressure laminate with thermoplastic edge A
L	thermally-fused laminate with thermoplastic edge
W	veneer A

Prices for Steps 1-5.

		FH	FL	FW
FV2E2. S	**2A**	$325	259	669
	2B	$530	424	877
	24	$530	424	877
	30	$540	433	903
	36	$552	440	1182

Step 6. Surface Finish

Solid-Color Laminate

For thermally-fused laminate with thermoplastic edge (L)

8Q	folkstone grey (CP)	+$0
91	white (CP)	+$0
98	studio white (CP)	+$0
CL	cool grey neutral	+$0
LU	soft white	+$0
WL	warm stone (CP)	+$0
WN	warm grey neutral	+$0

Twill Laminate

For thermally-fused laminate with thermoplastic edge (L)

LBF	neutral twill	+$0
LBJ	graphite twill	+$0
LBQ	white twill	+$0

Wood-Grain Laminate

For thermally-fused laminate with thermoplastic edge (L)

125	natural maple (CP)	+$0
126	natural cherry (CP)	+$0
127	walnut (CP)	+$0
139	light ash (CP)	+$0
140	warm ash (CP)	+$0
HP	light anigre	+$0
LBA	clear on ash (CP)	+$0
LBR	phantom ecru	+$0
LBS	phantom cocoa	+$0
LBU	medium matte walnut (CP)	+$0
LBV	warm grey teak	+$0
LBB	oak on ash (CP)	+$0
LBC	walnut on ash (CP)	+$0
76	light brown walnut	+$0

For high-pressure laminate with thermoplastic edge (H)

125	natural maple (CP) A	+$0
126	natural cherry (CP) A	+$0
127	walnut (CP) A	+$0
139	light ash (CP) A	+$0
140	warm ash (CP) A	+$0
76	light brown walnut	+$0
8Q	folkstone grey (CP)	+$0
91	white (CP)	+$0
98	studio white (CP)	+$0
CL	cool grey neutral	+$0
HF	inner tone light	+$0
HP	light anigre	+$0
LBA	clear on ash (CP)	+$0
LBB	oak on ash (CP)	+$0
LBC	walnut on ash (CP)	+$0
LBF	neutral twill	+$0
LBJ	graphite twill	+$0
LBQ	white twill	+$0
LBR	phantom ecru A	+$0
LBS	phantom cocoa A	+$0
LBU	medium matte walnut (CP) A	+$0
LBV	warm grey teak A	+$0
LT	light tone	+$0
LU	soft white	+$0
UBK	ultra black (CP) A	+$0
WL	warm stone (CP)	+$0
WN	warm grey neutral	+$0

Wood Veneer

For veneer (W)

CHD	noble cherry	+$85
2U	light brown walnut A	+$85
40	dark brown walnut A	+$85
EW	medium matte walnut A	+$85
ET	clear on ash A	+$85
EU	oak on ash A	+$85
EV	walnut on ash A	+$85
UL	natural maple A	+$85

Surface Support, Low Credenza, Fixed Height

FT298.

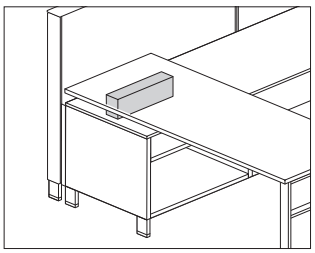

Product Information

Description

This support allows a low credenza to support 1 end of a surface and places the surface at 28½″ high. Attachment hardware included.

Notes

Support heights are:

- 5⅛″ high for storage type (M)
- 6⅞″ high for storage type (S)

Dimensions

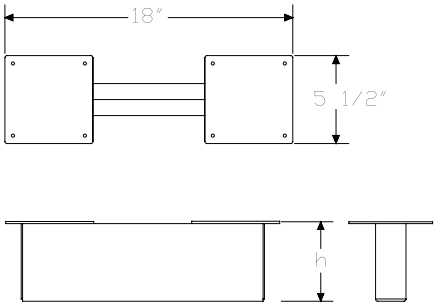

Specification Information

Step 1.

FT298.

Step 2. Storage Type

M	for use with thin top low credenza with 4″ high foot
S	for use with thin top low credenza with 2¼″ high base

Prices for Steps 1-2.

FT298.	**M**	$281
	S	$281

Step 3. Surface Finish

Sand Texture Paint

91	white (CP) A	+$0
CL	cool grey neutral A	+$0
G1	graphite (CP) A	+$0
UBK	ultra black (CP) A	+$0
WN	warm grey neutral A	+$0
8Q	folkstone grey (CP) A	+$0
98	studio white (CP) A	+$0
WL	warm stone (CP) A	+$0

Metallic Paint

611	beige mist metallic (CP)	+$0
613	silver (CP)	+$0
EH	metallic bronze	+$0
SNA	satin aluminum	+$10
SNB	satin bronze	+$10
SNC	satin carbon	+$10

Surface Support, Low Credenza, Adjustable Height

FT299.

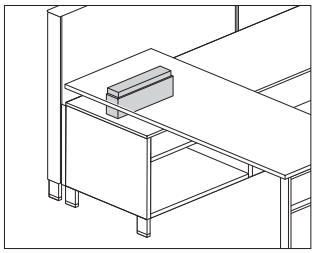

Product Information

Description

This height-adjustable support allows a low credenza to support 1 end of a surface, and provides 3″ of height adjustment for the surface. Attachment hardware included.

Notes

In lowest position, the height of supports is as follows:

- 3⅝″ high for storage type (M)
- 5⅜″ high for storage type (S)

When used with low credenza with ⅜″ thin top, surface adjustment height range is 27″ - 30″.

When used with low credenza with 1¼″ thick top, surface adjustment height range is 27⅝″ - 30⅝″.

Dimensions

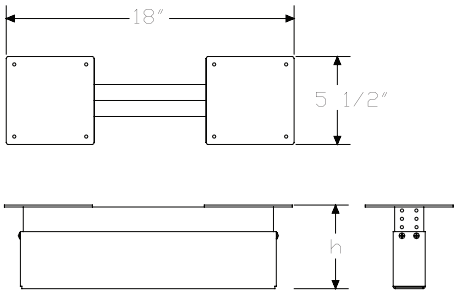

Specification Information

Step 1.

FT299.

Step 2. Storage Type

M	for use with low credenza with 4″ high foot
S	for use with low credenza with 2¼″ high base

Prices for Steps 1-2.

FT299.	**M**	$467
	S	$467

Step 3. Surface Finish

Sand Texture Paint		
UBK	ultra black (CP)	+$0
8Q	folkstone grey (CP)	+$0
91	white (CP)	+$0
98	studio white (CP)	+$0
CL	cool grey neutral	+$0
G1	graphite (CP)	+$0
WL	warm stone (CP)	+$0
WN	warm grey neutral	+$0

Metallic Paint		
611	beige mist metallic (CP)	+$0
613	silver (CP)	+$0
EH	metallic bronze	+$0
SNA	satin aluminum	+$10
SNB	satin bronze	+$10
SNC	satin carbon	+$10

Fixed Surface Support, Low Credenza, Power Chase

FV298.

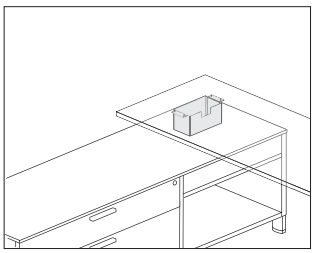

Product Information

Description

This power chase support allows a low credenza to support 1 end of a surface and places the surface at 28½″ high. The support is open to allow cords to route from surface through top of credenza and through to wall. Attachment hardware included.

Notes

Support heights:

Storage Type—Height

M—5⅛″

S—6⅞″

R—6″

W—4¼″

For use with wood low credenza, open with drawers, power access (FFV73.), ordered separately.

Support is sized for the 6-module Logic G1000 grommet mounted electrical distributor (Y1425.D or .G).

Dimensions

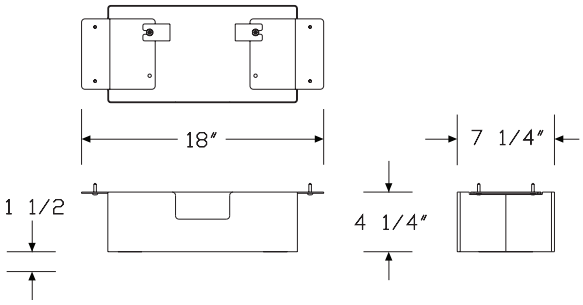

W – 1 1/4″ top, 4″ high foot

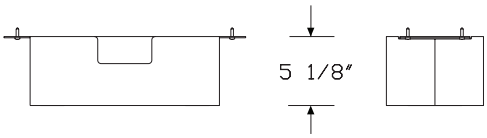

M – Thin top, 4″ high foot

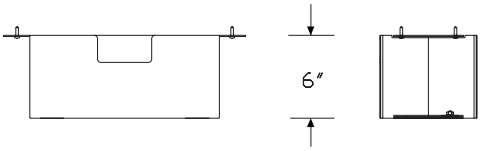

R – 1 1/4″ top, 2 1/4″ high foot

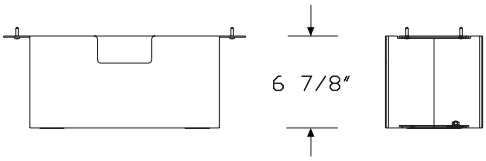

S – Thin top, 2 1/4″ high foot

Specification Information

Step 1.

FV298. A

Step 2. Storage Type

M	for use with thin top low credenza with 4″ high foot A	
S	for use with thin top low credenza with 2¼″ high base A	
R	for use with 1¼″ top low credenza with 2¼″ high base A	
W	for use with 1¼″ top low credenza with 4″ high foot A	

Prices for Steps 1-2.

FV298.	**M**	$397
	S	$397
	R	$397
	W	$397

Step 3. Surface Finish

611	beige mist metallic (CP) A	+$0
613	silver (CP) A	+$0
BK	black A	+$0
UBK	ultra black (CP) A	+$0
8Q	folkstone grey (CP) A	+$0
91	white (CP) A	+$0
98	studio white (CP) A	+$0
CL	cool grey neutral A	+$0
EH	metallic bronze A	+$0
G1	graphite (CP) A	+$0
WL	warm stone (CP) A	+$0
WN	warm grey neutral A	+$0

Metallic Paint

SNA	satin aluminum A	+$10
SNB	satin bronze A	+$10
SNC	satin carbon A	+$10

Stiffener FV696.

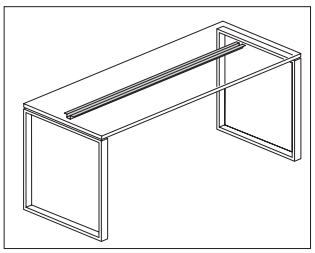

Product Information

Description

This stiffener is used to add additional stiffness to a Canvas freestanding surface, Canvas or Ethospace® surface-attached surface, peninsula or any frame-attached surface when a center cantilever cannot be used. Attachment hardware included.

Notes

Canvas and Ethospace laminate or veneer surfaces 54″ wide or wider and painted formcoat surfaces 48″ wide or wider that cannot use a center cantilever require stiffener(s).

See Canvas Office Landscape® Planning Guide or Ethospace Work Surface Planning Guide for specific stiffener guidelines.

Stiffener hangs below surface and is 1¼″ high.

Dimensions

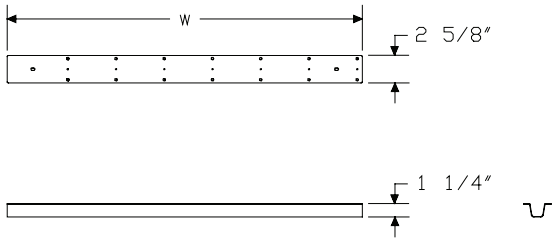

Specification Information

Step 1.

FV696.

Step 2. Width

34	33⅞″ wide
39	38⅝″ wide
43	43¼″ wide
48	48″ wide
57	57⅜″ wide
62	62⅛″ wide
67	66¾″ wide
71	71½″ wide
81	80⅞″ wide

Prices for Steps 1-2.

FV696.	**34**	$101
	39	$103
	43	$103
	48	$103
	57	$103
	62	$103
	67	$103
	71	$103
	81	$103

Cable Manager FV695.

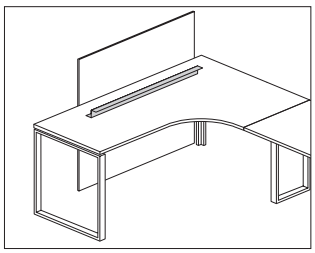

Product Information

Description

This cable manager attaches beneath a surface to provide routing of cables and cords at the back edge of a desk or return. Attachment hardware included.

Notes

When using cable manager with privacy panel or screen, specify cable manager width 12″ less than privacy panel or screen width.

Dimensions

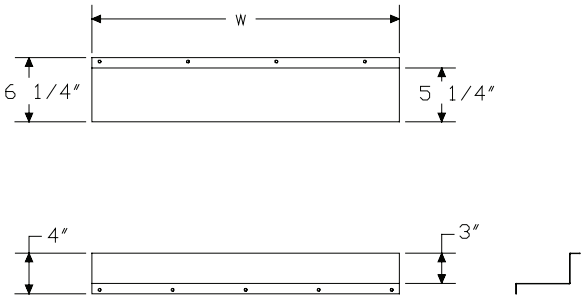

Specification Information

Step 1.

FV695.

Step 2. Width

18	18″ wide
24	24″ wide
30	30″ wide
36	36″ wide
42	42″ wide
48	48″ wide

Prices for Steps 1-2.

FV695.	**18**	$110
	24	$116
	30	$126
	36	$134
	42	$145
	48	$158

Step 3. Surface Finish

Sand Texture Paint

UBK	ultra black (CP)	+$0
8Q	folkstone grey (CP)	+$0
91	white (CP)	+$0
98	studio white (CP)	+$0
BK	black	+$0
CL	cool grey neutral	+$0
G1	graphite (CP)	+$0
WL	warm stone (CP)	+$0
WN	warm grey neutral	+$0

Metallic Paint

611	beige mist metallic (CP)	+$0
613	silver (CP)	+$0
EH	metallic bronze	+$0
SNA	satin aluminum	+$10
SNB	satin bronze	+$10
SNC	satin carbon	+$10

Cable Management Trough FT199.

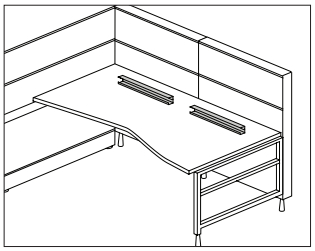

Product Information

Description

This trough attaches along the underside of a Canvas surface to hold and manage power/data cables. It includes two 14″-wide troughs. Finish is black. Attachment hardware is included.

Dimensions

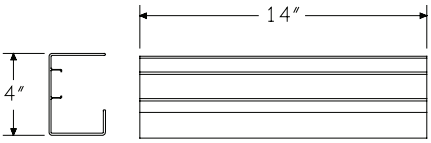

Specification Information

Step 1.

FT199.	$102

Cable Management Channel FT19C.

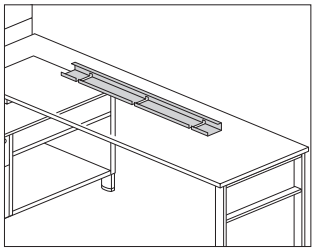

Product Information

Description

This channel attaches to the underside of a surface to hold and manage cords and cables. Attachment hardware included.

Dimensions

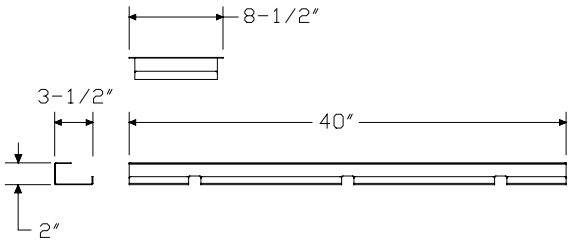

Specification Information

Step 1.

FT19C. A

Step 2. Width

08	8″ wide A
40	40″ wide A

Prices for Steps 1-2.

FT19C.	**08**	$62
	40	$110

Cord Cleat G1331.

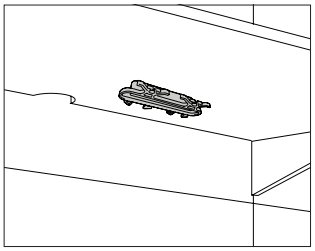

Product Information

Description

This cleat attaches to the underside of a work surface or table to manage cords and cables. Finish is cool grey neutral. Package contains 2.

Dimensions

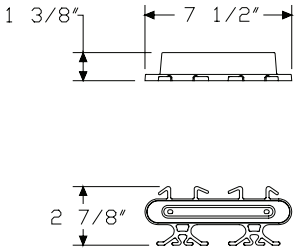

Specification Information

Step 1.

G1331.	$35

Vertical Cable Manager FV698.

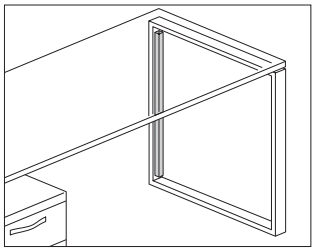

Product Information

Description

This plastic cable manager adheres with double-sided tape to a desk leg to route cords and cables from the floor to the surface. Package of 6.

Dimensions

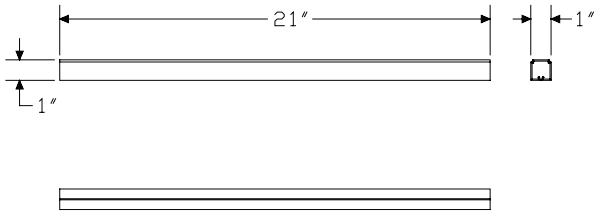

Specification Information

Step 1.

FV698.21	$100

Step 2. Surface Finish

G1	graphite (CP)	+$0
UBK	ultra black (CP)	+$0
3G	brownstone	+$0
8Q	folkstone grey (CP)	+$0
91	white (CP)	+$0
98	studio white (CP)	+$0
BK	black	+$0
CL	cool grey neutral	+$0
WL	warm stone (CP)	+$0
WN	warm grey neutral	+$0

Grommet Kit, Surface FV982.

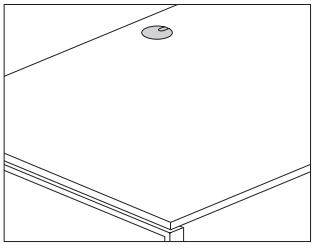

Product Information

Description

This grommet kit allows cords and cables to be routed through a surface. Includes a template for proper placement. Package of 6.

Notes

Grommet kit requires field-drilling of surface.

Dimensions

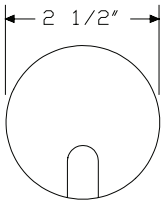

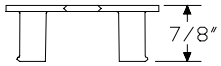

Specification Information

Step 1.

FV982.	$56

Step 2. Grommet Finish

G1	graphite (CP)	+$0
UBK	ultra black (CP)	+$0
3G	brownstone	+$0
8Q	folkstone grey (CP)	+$0
91	white (CP)	+$0
98	studio white (CP)	+$0
BK	black	+$0
CL	cool grey neutral	+$0
LU	soft white	+$0
MT	medium tone	+$0
WL	warm stone (CP)	+$0
WN	warm grey neutral	+$0

Storage Cabinet, Dock Mounted, Open

FD415.

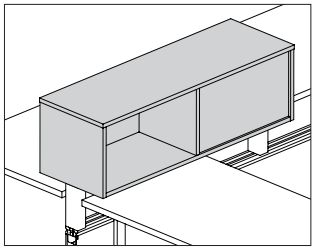

Product Information

Description

This cabinet has a laminate or veneer surface and mounts to the top rail of a Canvas dock to provide storage on 1 or both sides.

Notes

Double-sided (D) provides storage access on both sides of the cabinet, allowing half of the storage to be accessed from each side of the dock wall.

Single-sided (S) provides storage access on 1 side only.

Order stanchion support for center mount (FD417.) or offset mount (FD419.) separately.

Order optional accessories separately:

- Marker board (FT492.)
- Tackboard (FT491.)

To create a perpendicular application, order perpendicular upper storage stanchion support (FD418.) and storage support leg (FD295.) separately. Storage unit must be specified as center mount (FD415.xxxxC) attachment.

Dimensions

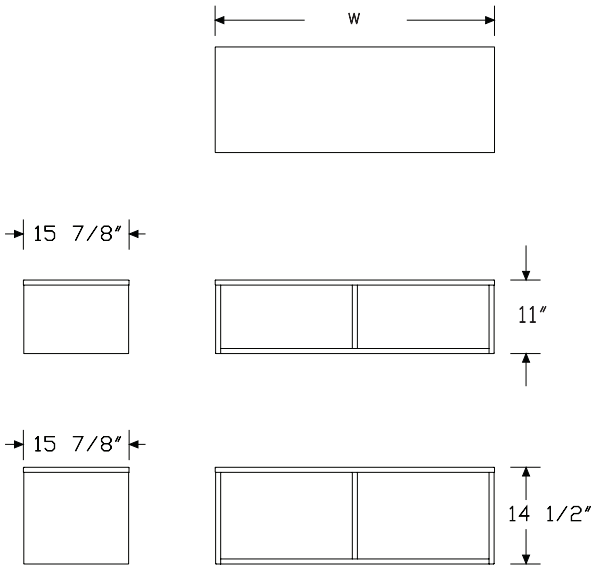

Specification Information

Step 1.

FD415. A

Step 2. Height

11 11″ high
15 15″ high

Step 3. Width

36 36″ wide
42 42″ wide
48 48″ wide
60 60″ wide
72 72″ wide

Step 4. Attachment

C center mount
F offset

Step 5. Storage Type

For center mount (C)

D double-sided
S single-sided

For offset (F)

S single-sided

Step 6. Position

For double-sided (D)

L opening left
R opening right

For single-sided (S)

S opening left and right

Step 7. Surface Material

L thermally-fused laminate

Prices for Steps 1-7.

		CDLL	CDRL	CSSL	FSSL
FD415. 11	**36**	$1318	1318	1318	1318
	42	$1434	1434	1434	1434
	48	$1547	1547	1547	1547
	60	$1722	1722	1722	1722
	72	$1896	1896	1896	1896

15	**36**	$1377	1377	1377	1377
	42	$1516	1516	1516	1516
	48	$1653	1653	1653	1653
	60	$1855	1855	1855	1855
	72	$2061	2061	2061	2061

Step 8. Top/Edge Finish

Solid-Color Laminate

8Q	folkstone grey (CP)	+$0
91	white (CP)	+$0
98	studio white (CP)	+$0
CL	cool grey neutral	+$0
LU	soft white	+$0
WL	warm stone (CP)	+$0
WN	warm grey neutral	+$0
LBF	neutral twill	+$0
LBJ	graphite twill	+$0
LBQ	white twill	+$0

Wood-Grain Laminate

125	natural maple (CP) A	+$0
126	natural cherry (CP) A	+$0
127	walnut (CP) A	+$0
139	light ash (CP) A	+$0
140	warm ash (CP) A	+$0
76	light brown walnut	+$0
HP	light anigre	+$0
LBA	clear on ash (CP)	+$0
LBR	phantom ecru	+$0
LBS	phantom cocoa	+$0
LBU	medium matte walnut (CP)	+$0
LBV	warm grey teak	+$0
LBB	oak on ash (CP)	+$0
LBC	walnut on ash (CP)	+$0

Tackboard, Storage Cabinet, Frame Top Mounted FT491.

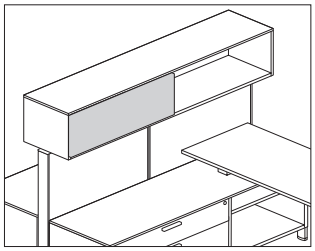

Product Information

Description

This tackboard attaches to 1 side of a double-sided frame top mounted storage cabinet to provide a tackable surface. Attachment hardware included.

Notes

Specify tackboard width ½ the width of the storage cabinet.

Attaches to back of unit or to interior of open storage cabinet (FT415.).

Tackboard accepts Customer's Own Material (COM). Yardage is estimated for directional, 54″-wide fabrics.

For tackable fabric option (T)

Width—Yardage

All widths—.61

For tackable fabric, horizontal (R)

Width—Yardage

18—.72

21—.80

24—.88

30—1.05

36—1.22

For information on multiple quantities or nondirectional fabrics, contact COM Department. See Order Information in Appendices.

Dimensions

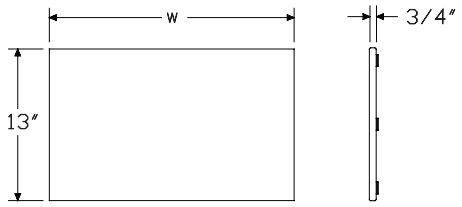

Specification Information

Step 1.

FT491. A

Step 2. Width

36	16¾″ for 36″-wide cabinet A
42	19¾″ for 42″ -wide cabinet A
48	22¾″ for 48″ -wide cabinet A
60	28¾″ for 60″ -wide cabinet A
72	34¾″ for 72″ -wide cabinet A
84	20″ for 84″ -wide cabinet A
96	23″ for 96″ -wide cabinet A

Step 3. Surface Material

T	tackable fabric A
R	tackable fabric, horizontal A

Prices for Steps 1-3.

		T	R
FT491.	**36**	$187	191
	42	$213	219
	48	$237	244
	60	$276	282
	72	$315	324
	84	$213	219
	96	$237	244

Step 4. Surface Finish

See application chart and textiles list for fabric usage and numbers. First 2 digits of number indicate fabric line; remaining digit(s) indicate fabric color.

Price Category 1	+$0
Price Category 2	+$23
Price Category 3	+$40
Price Category 4	+$61
Price Category 5	+$124
Price Category B	+$44
Price Category C	+$61
Price Category D	+$77
Price Category E	+$94
Price Category F	+$120

Markerboard, Storage Cabinet, Frame Top Mounted FT492.

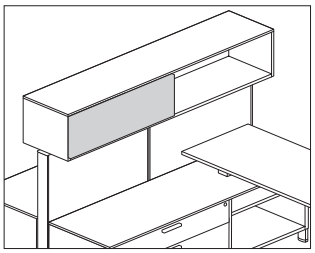

Product Information

Description

This marker board attaches to 1 side of a double-sided frame top mounted storage cabinet to provide a writing surface for dry-erase markers. Attachment hardware included.

Notes

Specify marker board width ½ the width of the storage cabinet.

Attaches to back of storage unit (FT415.).

Dimensions

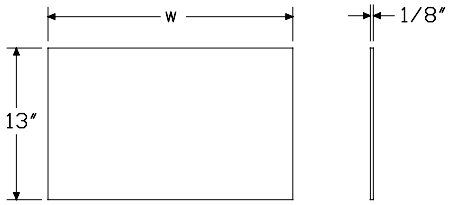

Specification Information

Step 1.

FT492. A

Step 2. Width

36	16¾″ for 36″-wide cabinet A
42	19¾″ for 42″ -wide cabinet A
48	22¾″ for 48″ -wide cabinet A
60	28¾″ for 60″ -wide cabinet A
72	34¾″ for 72″ -wide cabinet A
84	20″ for 84″ -wide cabinet A
96	23″ for 96″ -wide cabinet A

Prices for Steps 1-2.

FT492.	**36**	$176
	42	$183
	48	$191
	60	$214
	72	$233
	84	$183
	96	$191

Storage Cabinet, Dock Mounted, Sliding Door FD416.

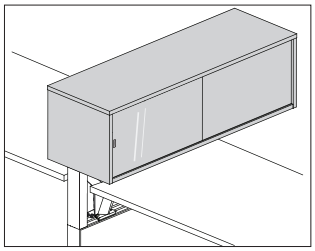

Product Information

Description

This sliding glass door cabinet has a laminate or veneer surface and mounts to the top rail of a Canvas dock to provide storage on 1 or both sides. Back-painted glass doors slide along in inset track. Doors are nonlockable and include a notched pull.

Notes

Door material is always back-painted glass.

Glass doors are back-painted and writable with dry erase marker. Doors are nonmagnetic. Glass doors cannot lock.

Double-sided (D) storage unit provides storage access on both sides of the cabinet, allowing half of the storage to be accessed from each side of the dock.

Single-sided (S) storage unit provides storage access on 1 side of the dock only.

Single-sided (S) units have 2 doors on 1 side of cabinet; double-sided (D) units have 1 door on each side of the cabinet.

Actual height of 11"-high (11) unit is 10½"; actual height of 15"-high (15) unit is 14½".

Order stanchion support for center mount (FD417.) or offset mount (FD419.) separately.

To create a perpendicular application, order perpendicular upper storage stanchion support (FD418.) and storage support leg (FD295.) separately. Storage unit must be specified as center mount (FD416.xxxxC) attachment.

Dimensions

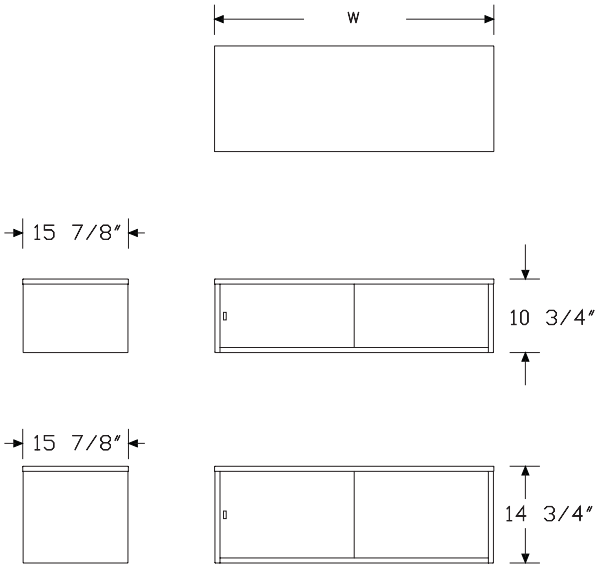

Specification Information

Step 1.

FD416. A

Step 2. Height

11	11″ high A
15	15″ high A

Step 3. Width

36	36″ wide A
42	42″ wide A
48	48″ wide A
60	60″ wide A
72	72″ wide A

Step 4. Attachment

C	center mount A
F	offset A

Step 5. Storage Type

For center mount (C)

D	double-sided A
S	single-sided A

For offset (F)

S	single-sided A

Step 6. Position

For double-sided (D)

L	opening left A
R	opening right A

For single-sided (S)

S	opening left and right A

Step 7. Surface Material

L	thermally-fused laminate A

Step 8. Door Material

G	glass A

Prices for Steps 1-8.

			CDLLG	CDRLG	CSSLG	FSSLG
FD416.	**11**	**36**	$3239	3239	3239	3239
		42	$3325	3325	3325	3325
		48	$3432	3432	3432	3432
		60	$3619	3619	3619	3619
		72	$3906	3906	3906	3906
	15	**36**	$3272	3272	3272	3272
		42	$3412	3412	3412	3412
		48	$3655	3655	3655	3655
		60	$3995	3995	3995	3995
		72	$4362	4362	4362	4362

Step 9. Top/Edge Finish

125	natural maple (CP) A	+$0
126	natural cherry (CP) A	+$0
127	walnut (CP) A	+$0
139	light ash (CP) A	+$0
140	warm ash (CP) A	+$0
LBR	phantom ecru A	+$0
LBS	phantom cocoa A	+$0
LBU	medium matte walnut (CP) A	+$0
LBV	warm grey teak A	+$0
76	light brown walnut	+$0
8Q	folkstone grey (CP)	+$0
91	white (CP)	+$0
98	studio white (CP)	+$0
CL	cool grey neutral	+$0
HP	light anigre	+$0
LBA	clear on ash (CP)	+$0
LBB	oak on ash (CP)	+$0
LBC	walnut on ash (CP)	+$0
LBF	neutral twill	+$0
LBJ	graphite twill	+$0
LBQ	white twill	+$0
LU	soft white	+$0
WL	warm stone (CP)	+$0
WN	warm grey neutral	+$0

Step 10. Door Material Finish

8Q	folkstone grey (CP)	+$0
91	white (CP)	+$0
98	studio white (CP)	+$0

Upper Storage Stanchion - Center Mount FD417.

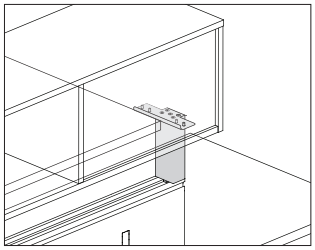

Product Information

Description

This painted metal stanchion attaches 1 end of a dock mounted storage cabinet to the dock top rail in a center mounting position. It can be attached anywhere along the top rail. Package contains 1 stanchion. Attachment hardware included.

Notes

Specify shared stanchion (T) to support 2 adjacent cabinet ends.

Order single-sided or double-sided dock mounted storage cabinet (FD415.) separately.

Dimensions

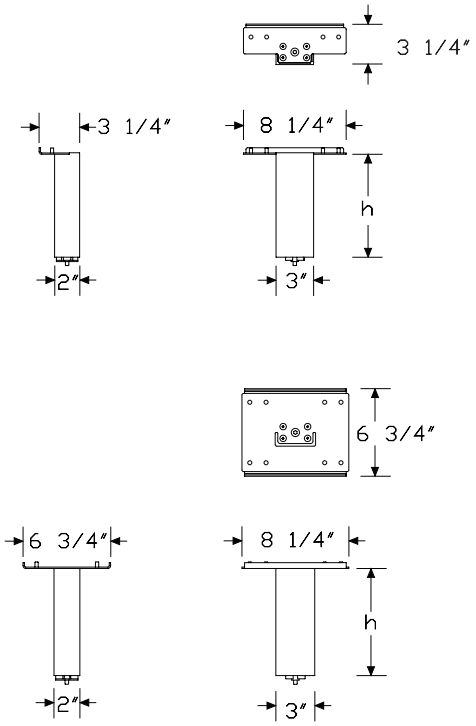

Specification Information

Step 1.

FD417. A

Step 2. Attachment

D	dock

Step 3. Height

09	9″ high
16	16″ high
20	20″ high

Step 4. Grouping/Quantity

S	single
T	shared

Prices for Steps 1-4.

			S	T
FD417.	**D**	**09**	$405	405
		16	$417	417
		20	$432	432

Step 5. Surface Finish

Sand Texture Paint

UBK	ultra black (CP) A	+$0
8Q	folkstone grey (CP)	+$0
91	white (CP)	+$0
98	studio white (CP)	+$0
BK	black	+$0
CL	cool grey neutral	+$0
G1	graphite (CP)	+$0
WL	warm stone (CP)	+$0
WN	warm grey neutral	+$0

Metallic Paint

611	beige mist metallic (CP) A	+$0
613	silver (CP) A	+$0
EH	metallic bronze	+$0
SNA	satin aluminum	+$10
SNB	satin bronze	+$10
SNC	satin carbon	+$10

Upper Storage Stanchion - Offset Mount FD419.

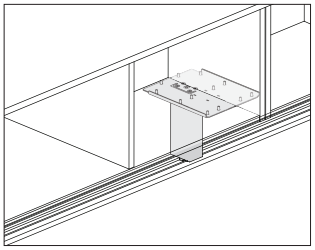

Product Information

Description

This painted metal stanchion attaches 1 end of a dock mounted storage cabinet to the dock top rail in an offset mounting position. It can be attached anywhere along the top rail, and is handed. Package contains 1 stanchion. Attachment hardware included.

Notes

Specify single-shared stanchion (T) to support 2 adjacent cabinet ends.

Order single-sided or double-sided dock mounted storage cabinet (FD415.) separately.

Dimensions

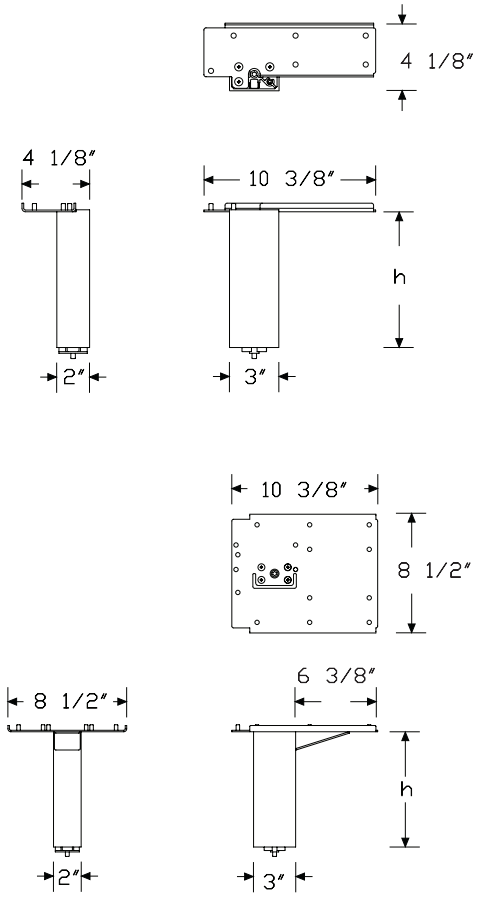

Specification Information

Step 1.

FD419. A

Step 2. Attachment

D	dock

Step 3. Height

09	9″ high
16	16″ high
20	20″ high

Step 4. Grouping/Quantity

L	single left
R	single right
T	single - shared

Prices for Steps 1-4.

		L	R	T
FD419. D	**09**	$401	401	413
	16	$414	414	426
	20	$428	428	439

Step 5. Surface Finish

Sand Texture Paint

UBK	ultra black (CP) A	+$0
8Q	folkstone grey (CP)	+$0
91	white (CP)	+$0
98	studio white (CP)	+$0
BK	black	+$0
CL	cool grey neutral	+$0
G1	graphite (CP)	+$0
WL	warm stone (CP)	+$0
WN	warm grey neutral	+$0

Metallic Paint

611	beige mist metallic (CP) A	+$0
613	silver (CP) A	+$0
EH	metallic bronze	+$0
SNA	satin aluminum	+$10
SNB	satin bronze	+$10
SNC	satin carbon	+$10

Perpendicular Upper Storage Stanchion Support

FD418.

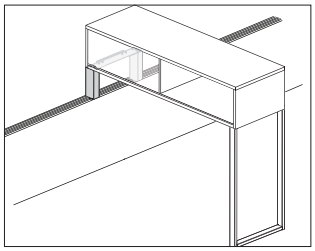

Product Information

Description

This stanchion attaches to the dock to support one end of upper storage mounted perpendicular to the dock. Storage is supported at the other end by a floor stanchion.

Notes

To reach 42″ datum, use 11″-high storage; for 46″ datum, use 15″-high storage. Order storage (FD415., FD416.) separately.

Order floor stanchion (FD295.) separately.

Dimensions

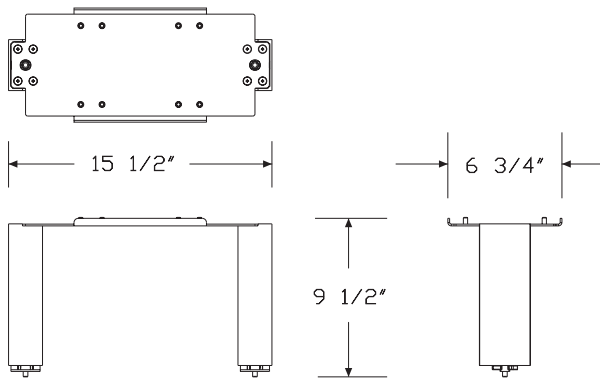

Shared Stanchion Support

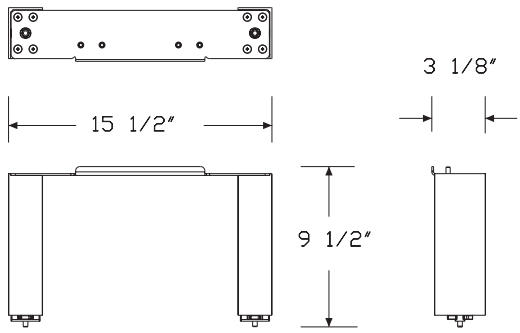

Single sided Stanchion Support

Specification Information

Step 1.

FD418.

Step 2. Attachment

D	dock

Step 3. Height

09	9″ high

Step 4. Grouping/Quantity

S	single
T	shared

Prices for Steps 1-4.

	S	T
FD418. D 09	$801	801

Step 5. Surface Finish

611	beige mist metallic (CP)	+$0
613	silver (CP)	+$0
UBK	ultra black (CP)	+$0
8Q	folkstone grey (CP)	+$0
91	white (CP)	+$0
98	studio white (CP)	+$0
BK	black	+$0
CL	cool grey neutral	+$0
EH	metallic bronze	+$0
G1	graphite (CP)	+$0
SNA	satin aluminum	+$10
SNB	satin bronze	+$10
SNC	satin carbon	+$10
WL	warm stone (CP)	+$0
WN	warm grey neutral	+$0

Storage Support, Perpendicular to Dock FD295.

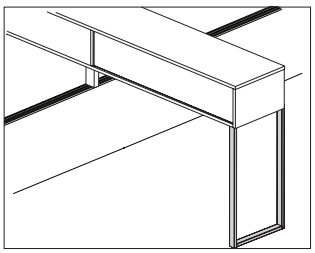

Product Information

Description

This stanchion supports 1 end of upper storage placed perpendicular to the dock. Storage is attached to and supported by the dock at 1 end and by this to-the-floor stanchion at the other end.

Notes

To reach 42″ datum, use 11″-high storage (FD416.); for 46″ datum use 15″-high storage (FD415., FD416.), ordered separately.

Dimensions

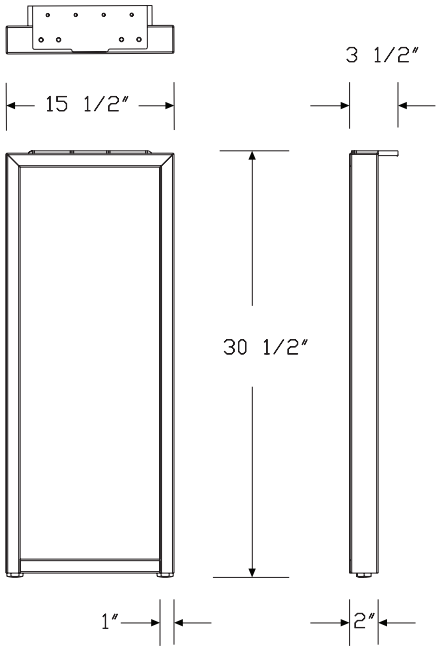

Specification Information

Step 1.

FD295. A

Step 2. Height

31	31″ high stanchion

Step 3. Surface Material

P	painted

Prices for Steps 1-3.

		P
FD295. 31		$887

Step 4. Surface Finish

611	beige mist metallic (CP) A	+$0
613	silver (CP) A	+$0
8Q	folkstone grey (CP)	+$0
91	white (CP)	+$0
98	studio white (CP)	+$0
BK	black	+$0
CL	cool grey neutral	+$0
EH	metallic bronze	+$0
G1	graphite (CP)	+$0
UBK	ultra black (CP) A	+$0
WL	warm stone (CP)	+$0
WN	warm grey neutral	+$0

Screen FV694.

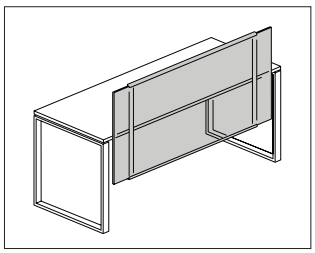

Product Information

Description

This screen attaches to a desk or return. It has a 1″-thick frame with a ¼″-thick translucent or painted surface. Attachment hardware included.

Notes

When attaching the 12″-high screen to a basic desk or return, specify screen width 6″ less than surface width.

When attaching a screen of any height to a single pedestal desk or pedestal return, specify screen width 18″ less than surface width. When attaching to a double pedestal desk, specify screen width 30″ less than surface width.

When attached to surface, there is a 1½″ gap between the back edge and the screen.

For translucent plastic (A) surface material, screen frame finish is metallic silver (MS). For painted (P) surface material, screen frame finish will match bracket finish (Step 6.).

For cable management between screen and back edge of surface, specify cable manager (FV695.) separately.

Dimensions

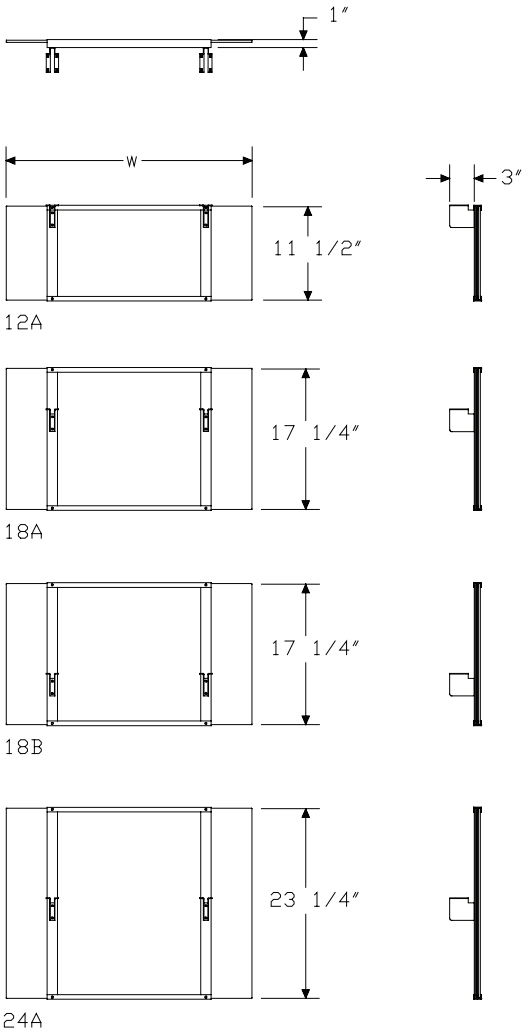

Specification Information

Step 1.

FV694.

Step 2. Surface Material

A	translucent plastic
P	painted

Step 3. Height

For painted (P)

12A	12″ below work surface

For translucent plastic (A)

12A	12″ below work surface
18A	6″ above/12″ below work surface
18B	12″ above/6″ below work surface
24A	12″ above/12″ below work surface

Step 4. Width

For 12″ below work surface (12A)

30	30″ wide
36	36″ wide
42	42″ wide
48	48″ wide
54	54″ wide
60	60″ wide
66	66″ wide
72	72″ wide

For 6″ above/12″ below work surface (18A), 12″ above/6″ below work surface (18B), or 12″ above/12″ below work surface (24A)

30	30″ wide
36	36″ wide
42	42″ wide
48	48″ wide
54	54″ wide

Prices for Steps 1-4.

			30	36	42	48	54	60
FV694.	**A**	**12A**	$1012	1055	1096	1133	1177	1216
		18A	$1066	1109	1152	1193	1234	—
		18B	$1066	1109	1152	1193	1234	—
		24A	$1216	1267	1312	1363	1410	—
	P	**12A**	$924	958	993	1035	1069	1105

			66	72
FV694.	**A**	**12A**	$1257	1295
	P	**12A**	$1141	1178

Step 5. Surface Finish

Sand Texture Paint

For painted (P)

UBK	ultra black (CP)	+$0
8Q	folkstone grey (CP)	+$0
91	white (CP)	+$0
98	studio white (CP)	+$0
BK	black	+$0
CL	cool grey neutral	+$0
G1	graphite (CP)	+$0
WL	warm stone (CP)	+$0
WN	warm grey neutral	+$0

Metallic Paint

For painted (P)

611	beige mist metallic (CP)	+$0
613	silver (CP)	+$0
EH	metallic bronze	+$0
SNA	satin aluminum	+$10
SNB	satin bronze	+$10
SNC	satin carbon	+$10

Translucent Plastic

For translucent plastic (A)

J9	opal frosted	+$0

Step 6. Bracket Finish

UBK	ultra black (CP)	+$0
8Q	folkstone grey (CP)	+$0
91	white (CP)	+$0
98	studio white (CP)	+$0
BK	black	+$0
CL	cool grey neutral	+$0
G1	graphite (CP)	+$0
WL	warm stone (CP)	+$0
WN	warm grey neutral	+$0

Metallic Paint		
611	beige mist metallic (CP)	+$0
613	silver (CP)	+$0
EH	metallic bronze	+$0
SNA	satin aluminum	+$10
SNB	satin bronze	+$10
SNC	satin carbon	+$10

Modesty Panel FV697.

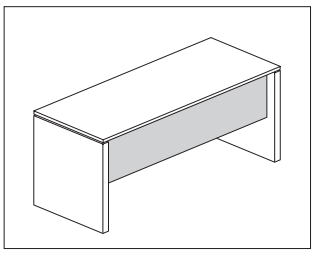

Product Information

Description

This modesty panel attaches to a closed-leg rectangular or concave rectangular desk to provide partial- or full-height enclosure below the surface and increase stability. The panel can be mounted inset from the back edge of the desk, or flush with the back edge for knee clearance. Available in laminate or veneer. Attachment hardware included.

Notes

Modesty panel spans between 2 closed support legs (FV2E2.24, .30, or .36) and attaches to the closed support legs and underside of a surface. It does not work with shared closed support legs.

Grain direction is vertical on veneer and wood-grain laminate panel.

Wood-grain laminate option is only available in 36″ - 60″ widths.

Dimensions

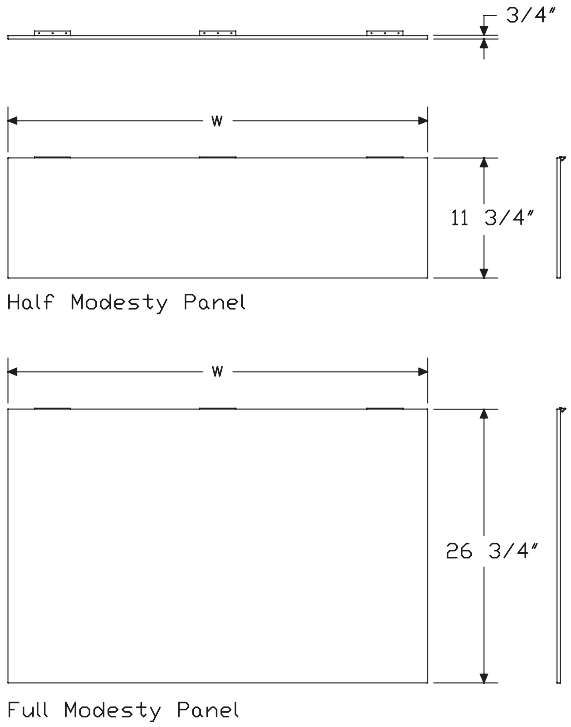

Specification Information

Step 1.

FV697.

Step 2. Width

60	60″ wide
66	66″ wide
72	72″ wide
84	84″ wide
96	96″ wide

Step 3. Modesty Panel Type

F	full modesty panel
H	half modesty panel

Step 4. Surface Material

H	high-pressure laminate with thermoplastic edge A
L	thermally-fused laminate with thermoplastic edge
W	veneer A

Prices for Steps 1-4.

			H	L	W
FV697.	**60**	**F**	$939	750	1642
		H	$660	528	922
	66	**F**	$1030	824	1798
		H	$722	578	1022
	72	**F**	$1125	900	1968
		H	$785	629	1123
	84	**F**	$1307	1046	2293
		H	$810	648	1319
	96	**F**	$1499	1200	2628
		H	$881	667	1526

Step 5. Surface Finish

Solid-Color Laminate

For 60″ wide (60) with thermally-fused laminate with thermoplastic edge (L)

8Q	folkstone grey (CP)	+$0
91	white (CP)	+$0
98	studio white (CP)	+$0
CL	cool grey neutral	+$0
LU	soft white	+$0
WL	warm stone (CP)	+$0
WN	warm grey neutral	+$0

Twill Laminate

For 60″ wide (60) with thermally-fused laminate with thermoplastic edge (L)

LBF	neutral twill	+$0
LBJ	graphite twill	+$0
LBQ	white twill	+$0

Wood-Grain Laminate

For 60″ wide (60) with thermally-fused laminate with thermoplastic edge (L)

125	natural maple (CP)	+$0
126	natural cherry (CP)	+$0
127	walnut (CP)	+$0
139	light ash (CP)	+$0
140	warm ash (CP)	+$0
76	light brown walnut	+$0
HP	light anigre	+$0
LBA	clear on ash (CP)	+$0
LBR	phantom ecru	+$0
LBS	phantom cocoa	+$0
LBU	medium matte walnut (CP)	+$0
LBV	warm grey teak	+$0
LBB	oak on ash (CP)	+$0
LBC	walnut on ash (CP)	+$0

Solid-Color Laminate

For 66″ wide (66), 72″ wide (72), 84″ wide (84), or 96″ wide (96) with thermally-fused laminate with thermoplastic edge (L)

8Q	folkstone grey (CP)	+$0
91	white (CP)	+$0
98	studio white (CP)	+$0
CL	cool grey neutral	+$0
LU	soft white	+$0
WL	warm stone (CP)	+$0
WN	warm grey neutral	+$0

Wood Veneer

For veneer (W)

2U	light brown walnut A	+$50
40	dark brown walnut	+$50
CHD	noble cherry	+$50
ET	clear on ash A	+$50
EU	oak on ash A	+$50
EV	walnut on ash A	+$50
EW	medium matte walnut	+$50
UL	natural maple A	+$50
WHN	natural white oak	+$50

For 60″ wide (60) with high-pressure laminate with thermoplastic edge (H)

125	natural maple (CP) A	+$0
126	natural cherry (CP) A	+$0
127	walnut (CP) A	+$0
139	light ash (CP) A	+$0
140	warm ash (CP) A	+$0
76	light brown walnut	+$0
8Q	folkstone grey (CP)	+$0
91	white (CP)	+$0
98	studio white (CP)	+$0
CL	cool grey neutral	+$0
HF	inner tone light	+$0
HP	light anigre	+$0
LBA	clear on ash (CP)	+$0
LBB	oak on ash (CP)	+$0
LBC	walnut on ash (CP)	+$0
LBF	neutral twill	+$0
LBJ	graphite twill	+$0
LBQ	white twill	+$0
LBR	phantom ecru A	+$0
LBS	phantom cocoa A	+$0
LBU	medium matte walnut (CP) A	+$0
LBV	warm grey teak A	+$0
LT	light tone	+$0
LU	soft white	+$0
UBK	ultra black (CP) A	+$0
WL	warm stone (CP)	+$0
WN	warm grey neutral	+$0

For 66″ wide (66), 72″ wide (72), 84″ wide (84), or 96″ wide (96) with high-pressure laminate with thermoplastic edge (H)

UBK	ultra black (CP)	+$0
8Q	folkstone grey (CP)	+$0
91	white (CP)	+$0
98	studio white (CP)	+$0
CL	cool grey neutral	+$0
HF	inner tone light	+$0
LT	light tone	+$0
LU	soft white	+$0
WL	warm stone (CP)	+$0
WN	warm grey neutral	+$0

Privacy Panel FV693.

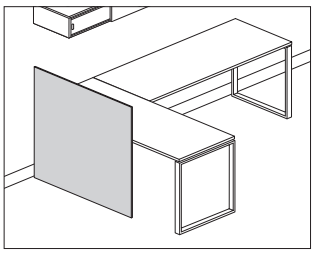

Product Information

Description

This panel stands on the floor and attaches to a desk or return to provide partial- or full-width privacy. It is ¾″ thick, has a laminate or veneer surface, and includes leveling glides. Attachment hardware included.

Notes

For additional product options, see Vary Easy Program in Appendices.

Grain direction is vertical on veneer and wood-grain laminate panel.

29″-high panel provides modesty from the floor to the surface. 42″- and 46″-high panels rise above the surface for visual privacy.

When attached to surface, there is a 1½″ gap between the back edge and the panel.

Wood-grain laminate option is only available in 33″ - 60″ widths. Specify 2 panels to match the width of surfaces wider than 60″.

For cable management between privacy panel and back edge of surface, specify cable manager (FV695.) separately.

Dimensions

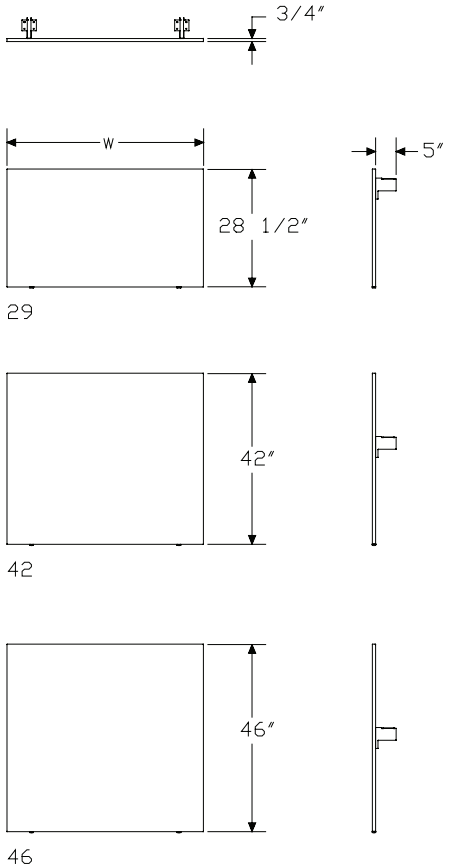

Specification Information

Step 1.

FV693.

Step 2. Height

29	29″ high
42	42″ high
46	46″ high

Step 3. Width

For 29″ high (29)

33	33″ wide
36	36″ wide
48	48″ wide
54	54″ wide
60	60″ wide
66	66″ wide
72	72″ wide
84	84″ wide

For 42″ high (42) or 46″ high (46)

48	48″ wide
54	54″ wide
60	60″ wide
72	72″ wide

Step 4. Surface Material

L	high-pressure laminate
W	veneer A

Prices for Steps 1-4.

			L	W
FV693.	**29**	**33**	$419	905
		36	$454	986
		48	$601	1314
		54	$674	1473
		60	$750	1642
		66	$824	1798
		72	$900	1968
		84	$1046	2293
	42	**48**	$727	1733
		54	$816	1948
		60	$905	2169
		72	$1087	2602
	46	**48**	$762	1812
		54	$860	2047
		60	$953	2272
		72	$1139	2720

Step 5. Surface Finish

Solid-Color Laminate

For 33″ wide (33), 36″ wide (36), 48″ wide (48), 54″ wide (54), or 60″ wide (60) with high-pressure laminate (L)

8Q	folkstone grey (CP)	+$0
91	white (CP)	+$0
98	studio white (CP)	+$0
CL	cool grey neutral	+$0
LU	soft white	+$0
WL	warm stone (CP)	+$0
WN	warm grey neutral	+$0

Twill Laminate

For 33″ wide (33), 36″ wide (36), 48″ wide (48), 54″ wide (54), or 60″ wide (60) with high-pressure laminate (L)

LBF	neutral twill	+$0
LBJ	graphite twill	+$0
LBQ	white twill	+$0

Wood-Grain Laminate

For 33″ wide (33), 36″ wide (36), 48″ wide (48), 54″ wide (54), or 60″ wide (60) with high-pressure laminate (L)

125	natural maple (CP)	+$0
126	natural cherry (CP)	+$0
127	walnut (CP)	+$0
139	light ash (CP)	+$0
140	warm ash (CP)	+$0
76	light brown walnut	+$0
HP	light anigre	+$0
LBA	clear on ash (CP)	+$0
LBR	phantom ecru	+$0
LBS	phantom cocoa	+$0
LBU	medium matte walnut (CP)	+$0
LBV	warm grey teak	+$0
LBB	oak on ash (CP)	+$0
LBC	walnut on ash (CP)	+$0

Solid-Color Laminate

For 66" wide (66), 72" wide (72), or 84" wide (84) with high-pressure laminate (L)

8Q	folkstone grey (CP)	+$0
91	white (CP)	+$0
98	studio white (CP)	+$0
CL	cool grey neutral	+$0
LU	soft white	+$0
WL	warm stone (CP)	+$0
WN	warm grey neutral	+$0

Wood Veneer

For veneer (W)

2U	light brown walnut A	+$85
40	dark brown walnut	+$85
CHD	noble cherry	+$85
ET	clear on ash A	+$85
EU	oak on ash A	+$85
EV	walnut on ash A	+$85
EW	medium matte walnut	+$85
UL	natural maple A	+$85
WHN	natural white oak	+$85

Step 6. Support Finish

Metallic Paint

611	beige mist metallic (CP)	+$0
613	silver (CP)	+$0
EH	metallic bronze	+$0
SNA	satin aluminum	+$10
SNB	satin bronze	+$10
SNC	satin carbon	+$10

Sand Texture Paint

UBK	ultra black (CP)	+$0
8Q	folkstone grey (CP)	+$0
91	white (CP)	+$0
98	studio white (CP)	+$0
BK	black	+$0
CL	cool grey neutral	+$0
G1	graphite (CP)	+$0
WL	warm stone (CP)	+$0
WN	warm grey neutral	+$0

Stanchion Infill, Acrylic FD430.

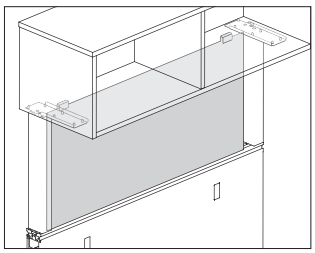

Product Information

Description

This acrylic infill fits between 2 stanchions below a dock mounted storage cabinet.

Notes

Infill is used between single or shared stanchions.

Specify infill width to match the width of storage cabinet (FD415.).

An opening is created between infill and stanchion at each end of infill.

- Single stanchion at each end, openings are ¾″
- Single stanchion at 1 end and shared stanchion at 1 end, openings are 1¼″
- Shared stanchion at each end, openings are 1¾″

Dimensions

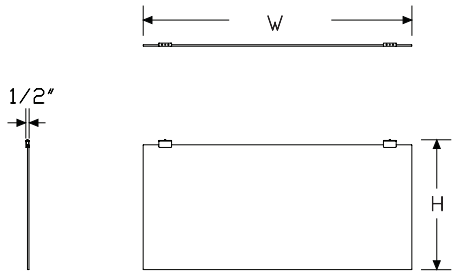

Specification Information

Step 1.

FD430. A

Step 2. Type

A	acrylic

Step 3. Height

16	16″ high for overhead storage at 53″ high
20	20″ high for overhead storage at 57″ high

Step 4. Width

36	36″ wide
42	42″ wide
48	48″ wide
60	60″ wide
72	72″ wide

Prices for Steps 1-4.

		36	42	48	60	72
FD430. A	**16**	$646	677	700	740	809
	20	$659	686	713	754	821

Step 5. Infill Finish

TR	clear	+$0
J9	opal frosted	+$50

Step 6. Attachment Bracket Finish

613	silver (CP) A	+$0
SNA	satin aluminum	+$10
SNB	satin bronze	+$10
SNC	satin carbon	+$10

Glass Screen, Dock Mounted FD114.

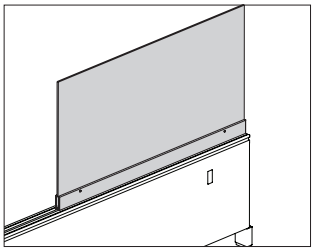

Product Information

Description

This glass screen attaches anywhere along the top rail of the 22″ high Canvas dock to extend the overall height and to provide boundary. Attachment hardware included.

Dimensions

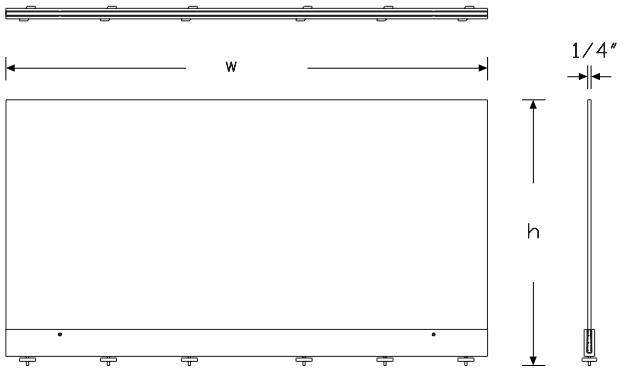

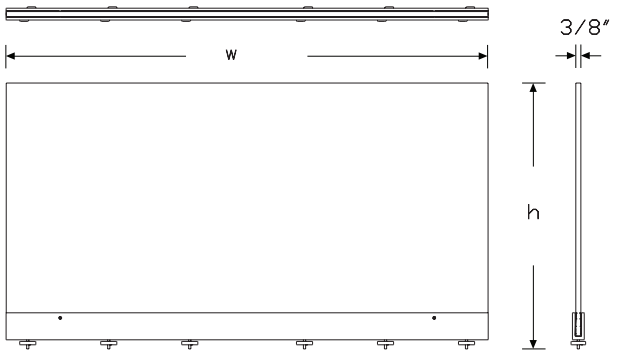

Specification Information

Step 1.

FD114.

Step 2. Type

G glass

Step 3. Height

20 20″ high
24 24″ high
31 31″ high
35 35″ high

Step 4. Width

42 42″ wide
48 48″ wide
60 60″ wide
72 72″ wide

Step 5. Surface Finish

TR clear glass - 1/4″ thick
5A opal etched - 1/4″ thick
C3 clear glass - 3/8″ thick
G3 opal glass - 3/8″ thick
NN no glass- for customer's own glass 1/4″
N3 no glass- for customer's own glass 3/8″

Prices for Steps 1-5.

		42TR	425A	42C3	42G3	42NN	42N3
FD114. G	**20**	$1168	1294	1619	1797	411	411
	24	$1343	1491	1849	2055	411	411
	31	$1664	1844	2244	2494	411	411
	35	$1666	1850	2494	2766	411	411

		48TR	485A	48C3	48G3	48NN	48N3
FD114. G	**20**	$1310	1452	1791	1991	442	442
	24	$1499	1664	2083	2311	442	442
	31	$1678	1867	2526	2806	442	442
	35	$1893	2101	2807	3118	442	442

		60TR	605A	60C3	60G3	60NN	60N3
FD114. G	**20**	$1559	1735	2102	2335	472	472
	24	$1632	1813	2401	2664	472	472
	31	$2048	2274	3046	3384	472	472
	35	$2201	2445	3329	3697	472	472

		72TR	725A	72C3	72G3	72NN	72N3
FD114. G	**20**	$1632	1813	2441	2712	490	490
	24	$1931	2140	2878	3199	490	490
	31	$2335	2595	3526	3916	490	490
	35	$2562	2848	3913	2782	490	490

Step 6. Finish		
AN	anodized	+$0

Pari Screen, Dock Mounted FD115.

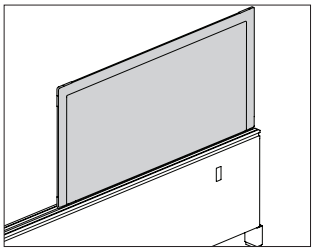

Product Information

Description

This tackable fabric screen attaches anywhere along the top rail of the 22″ high Canvas dock to extend the overall height and to provide boundary with a tackable surface. Attachment hardware included.

Notes

Screen accepts Customer's Own Material (COM). Yardage is estimated for nondirectional 54″-wide fabrics.

For vertical fabric direction (T):

Height—Yardage

20—1.58

24—1.84

31—2.27

35—2.53

For horizontal fabric direction (R), for 20″ high and 24″ high:

Width—Yardage

24—0.95

36—1.32

42—1.51

48—1.71

60—2.07

72—2.46

For horizontal fabric direction (R), for 31″ high and 35″ high:

Width—Yardage

24—1.90

36—2.66

42—3.02

48—3.41

60—4.17

72—4.92

For information on multiple quantities or directional fabrics, contact COM Department. See Order Information in Appendices.

Dimensions

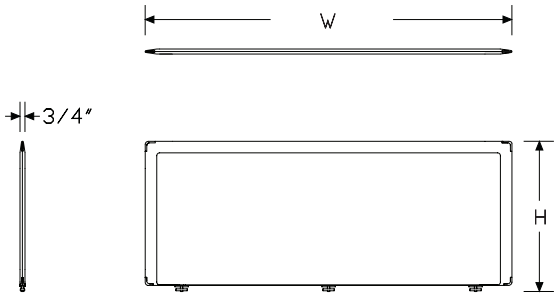

Specification Information

Step 1.

FD115. A

Step 2. Type

F	fabric

Step 3. Height

20	20″ high (to reach datum of 42″H)
24	24″ high (to reach datum of 46″H)
31	31″ high (to reach datum of 53″H)
35	35″ high (to reach datum of 57″H)

Step 4. Width

24	24″ wide
36	36″ wide
42	42″ wide
48	48″ wide
60	60″ wide
72	72″ wide

Step 5. Surface Material

For 24″ wide (24), 36″ wide (36), 42″ wide (42), or 48″ wide (48)

T	tackable fabric
R	tackable fabric, horizontal

For 60″ wide (60) or 72″ wide (72)

R	tackable fabric, horizontal

Prices for Steps 1-5.

		24T	24R	36T	36R	42T	42R
FD115. F	**20**	$970	970	1098	1098	1227	1227
	24	$1035	1035	1163	1163	1292	1292
	31	$1292	1292	1420	1420	1549	1549
	35	$1420	1420	1549	1549	1678	1678

		48T	48R	60R	72R
FD115. F	**20**	$1357	1357	1549	1678
	24	$1420	1420	1614	1741
	31	$1678	1678	1870	2000
	35	$1805	1805	2000	2128

Step 6. Fabric

For 20″ high (to reach datum of 42″H) (20) with 24″ wide (24)

Price Category B	+$72
Price Category 1	+$0
Price Category 2	+$16
Price Category 3	+$37
Price Category 4	+$64
Price Category 5	+$0
Price Category C	+$98
Price Category E	+$149

For 20″ high (to reach datum of 42″H) (20) with 36″ wide (36)

Price Category B	+$100
Price Category 1	+$0
Price Category 2	+$22
Price Category 3	+$52
Price Category 4	+$89
Price Category 5	+$0
Price Category C	+$136
Price Category E	+$206

For 20″ high (to reach datum of 42″H) (20) with 42″ wide (42)

Price Category B	+$114
Price Category 1	+$0
Price Category 2	+$24
Price Category 3	+$59
Price Category 4	+$102
Price Category 5	+$0
Price Category C	+$155
Price Category E	+$236

For 20″ high (to reach datum of 42″H) (20) with 48″ wide (48)

Price Category B	+$128
Price Category 1	+$0
Price Category 2	+$28
Price Category 3	+$66
Price Category 4	+$115
Price Category 5	+$0
Price Category C	+$175
Price Category E	+$268

For 20" high (to reach datum of 42"H) (20) with 60" wide (60)	
Price Category B	+$156
Price Category 1	+$0
Price Category 2	+$34
Price Category 3	+$80
Price Category 4	+$140
Price Category 5	+$0
Price Category C	+$212
Price Category E	+$323

For 20" high (to reach datum of 42"H) (20) with 72" wide (72)	
Price Category B	+$185
Price Category 1	+$0
Price Category 2	+$40
Price Category 3	+$96
Price Category 4	+$166
Price Category 5	+$0
Price Category C	+$252
Price Category E	+$384

For 24" high (to reach datum of 46"H) (24) with 24" wide (24)	
Price Category B	+$72
Price Category 1	+$0
Price Category 2	+$16
Price Category 3	+$37
Price Category 4	+$64
Price Category 5	+$0
Price Category C	+$98
Price Category E	+$149

For 24" high (to reach datum of 46"H) (24) with 36" wide (36)	
Price Category B	+$100
Price Category 1	+$0
Price Category 2	+$22
Price Category 3	+$52
Price Category 4	+$89
Price Category 5	+$0
Price Category C	+$136
Price Category E	+$206

For 24" high (to reach datum of 46"H) (24) with 42" wide (42)	
Price Category B	+$114
Price Category 1	+$0
Price Category 2	+$24
Price Category 3	+$59
Price Category 4	+$102
Price Category 5	+$0
Price Category C	+$155
Price Category E	+$236

For 24" high (to reach datum of 46"H) (24) with 48" wide (48)	
Price Category B	+$128
Price Category 1	+$0
Price Category 2	+$28
Price Category 3	+$66
Price Category 4	+$115
Price Category 5	+$0
Price Category C	+$175
Price Category E	+$268

For 24" high (to reach datum of 46"H) (24) with 60" wide (60)	
Price Category B	+$156
Price Category 1	+$0
Price Category 2	+$34
Price Category 3	+$80
Price Category 4	+$140
Price Category 5	+$0
Price Category C	+$212
Price Category E	+$323

For 24" high (to reach datum of 46"H) (24) with 72" wide (72)	
Price Category B	+$185
Price Category 1	+$0
Price Category 2	+$40
Price Category 3	+$96
Price Category 4	+$166
Price Category 5	+$0
Price Category C	+$252
Price Category E	+$384

For 31" high (to reach datum of 53"H) (31) with 24" wide (24)	
Price Category B	+$143
Price Category 1	+$0
Price Category 2	+$31
Price Category 3	+$73
Price Category 4	+$128
Price Category 5	+$0
Price Category C	+$194
Price Category E	+$296

For 31" high (to reach datum of 53"H) (31) with 36" wide (36)	
Price Category B	+$200
Price Category 1	+$0
Price Category 2	+$43
Price Category 3	+$103
Price Category 4	+$180
Price Category 5	+$0
Price Category C	+$272
Price Category E	+$415

For 31" high (to reach datum of 53"H) (31) with 42" wide (42)	
Price Category B	+$227
Price Category 1	+$0
Price Category 2	+$49
Price Category 3	+$118
Price Category 4	+$204
Price Category 5	+$0
Price Category C	+$310
Price Category E	+$472

For 31" high (to reach datum of 53"H) (31) with 48" wide (48)	
Price Category B	+$257
Price Category 1	+$0
Price Category 2	+$55
Price Category 3	+$132
Price Category 4	+$230
Price Category 5	+$0
Price Category C	+$349
Price Category E	+$533

For 31" high (to reach datum of 53"H) (31) with 60" wide (60)	
Price Category B	+$313
Price Category 1	+$0
Price Category 2	+$68
Price Category 3	+$162
Price Category 4	+$282
Price Category 5	+$0
Price Category C	+$427
Price Category E	+$652

For 31" high (to reach datum of 53"H) (31) with 72" wide (72)	
Price Category B	+$370
Price Category 1	+$0
Price Category 2	+$80
Price Category 3	+$191
Price Category 4	+$332
Price Category 5	+$0
Price Category C	+$504
Price Category E	+$768

For 35" high (to reach datum of 57"H) (35) with 24" wide (24)	
Price Category B	+$143
Price Category 1	+$0
Price Category 2	+$31
Price Category 3	+$73
Price Category 4	+$128
Price Category 5	+$0
Price Category C	+$194
Price Category E	+$296

For 35" high (to reach datum of 57"H) (35) with 36" wide (36)	
Price Category B	+$200
Price Category 1	+$0
Price Category 2	+$43
Price Category 3	+$103
Price Category 4	+$180
Price Category 5	+$0
Price Category C	+$272
Price Category E	+$415

For 35" high (to reach datum of 57"H) (35) with 42" wide (42)	
Price Category B	+$227
Price Category 1	+$0
Price Category 2	+$49
Price Category 3	+$118
Price Category 4	+$204
Price Category 5	+$0
Price Category C	+$310
Price Category E	+$472

For 35" high (to reach datum of 57"H) (35) with 48" wide (48)	
Price Category B	+$257
Price Category 1	+$0
Price Category 2	+$55
Price Category 3	+$132
Price Category 4	+$230
Price Category 5	+$0
Price Category C	+$349
Price Category E	+$533

For 35" high (to reach datum of 57"H) (35) with 60" wide (60)	
Price Category B	+$313
Price Category 1	+$0
Price Category 2	+$68
Price Category 3	+$162
Price Category 4	+$282
Price Category 5	+$0
Price Category C	+$427
Price Category E	+$652

For 35" high (to reach datum of 57"H) (35) with 72" wide (72)	
Price Category B	+$370
Price Category 1	+$0
Price Category 2	+$80
Price Category 3	+$191
Price Category 4	+$332
Price Category 5	+$0
Price Category C	+$504
Price Category E	+$768

Pari Screen, Stanchion Infill Fabric FD435.

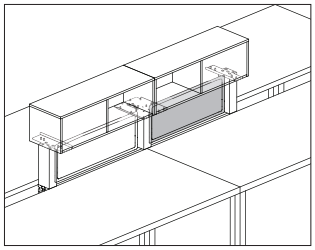

Product Information

Description

This tackable fabric screen fits between 2 stanchions below a dock mounted storage cabinet. Attachment hardware included.

Notes

Fabric infill is used between single or shared stanchions.

Fabric infill can be installed and removed with storage cabinet (FD415.) installed.

Specify fabric infill width to match the width of storage cabinet (FD415.).

An opening is created between infill and stanchion at each end of infill.

- Single stanchion at each end, openings are ¾″
- Single stanchion at 1 end and shared stanchion at 1 end, openings are 1¼″
- Shared stanchion at each end, openings are 1¾″

Screen accepts Customer's Own Material (COM). Yardage is estimated for nondirectional 54″-wide fabrics.

For vertical fabric direction (T):

Height—Yardage

16—1.30

20—1.53

For horizontal fabric direction (R):

Width—Yardage

36—1.17

42—1.36

48—1.53

60—1.92

72—2.29

For information on multiple quantities or directional fabrics, contact COM Department. See Order Information in Appendices.

Dimensions

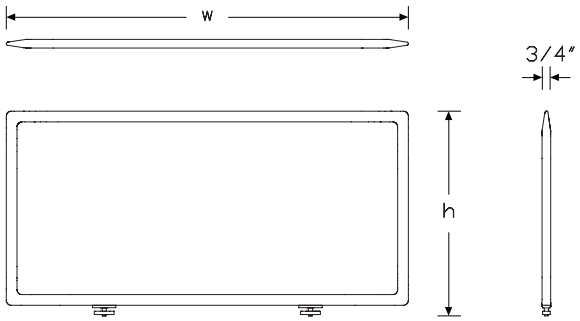

Specification Information

Step 1.

FD435. A

Step 2. Height

16 16″ high for overhead storage at 53″ high

20 20″ high for overhead storage at 57″ high

Step 3. Width

36 36″ wide

42 42″ wide

48 48″ wide

60 60″ wide

72 72″ wide

Step 4. Surface Material

For 36″ wide (36), 42″ wide (42), or 48″ wide (48)

R tackable fabric, horizontal

T tackable fabric

For 60″ wide (60) or 72″ wide (72)

R tackable fabric, horizontal

Prices for Steps 1-4.

			R	T
FD435.	**16**	**36**	$1145	1145
		42	$1288	1288
		48	$1429	1429
		60	$1503	—
		72	$1571	—
	20	**36**	$1214	1214
		42	$1358	1358
		48	$1503	1503
		60	$1712	—
		72	$1787	—

Pari Screen, Stanchion Infill Fabric

continued

Step 5. Fabric	
For 36" wide (36), 42" wide (42), or 48" wide (48)	
Price Category B	+$113
Price Category 1	+$0
Price Category 2	+$22
Price Category 3	+$50
Price Category 4	+$88
Price Category 5	+$0
Price Category C	+$127
Price Category E	+$234

For 60" wide (60) or 72" wide (72)	
Price Category B	+$149
Price Category 1	+$0
Price Category 2	+$37
Price Category 3	+$88
Price Category 4	+$152
Price Category 5	+$0
Price Category C	+$223
Price Category E	+$234

Pari Screen, Surface Attached FT351.

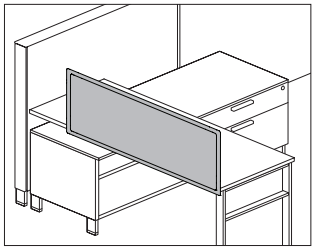

Product Information

Description

This tackable fabric screen attaches to a Canvas work surface to provide boundary with a tackable surface. Attachment hardware included.

Notes

Screen widths are actual dimensions, and extend to the end of Canvas work surfaces.

Screen extends 4″ below surface to hide attachment hardware.

Screen can be flush with back edge of surface, or provide a 1″ gap.

Screens 48″ wide and wider include an additional 1″-wide center mounting bracket.

Screen accepts Customer's Own Material (COM). Yardage is estimated for nondirectional 54″-wide fabrics.

For vertical fabric direction (T):

Height—Yardage

42—1.49

46—1.73

53—2.18

For horizontal fabric direction (R):

Width—Yardage

40—1.34

42—1.51

46—1.62

48—1.71

52—1.81

54—1.90

60—2.07

66—2.27

72—2.46

For information on multiple quantities or directional fabrics, contact COM Department. See Order Information in Appendices.

Dimensions

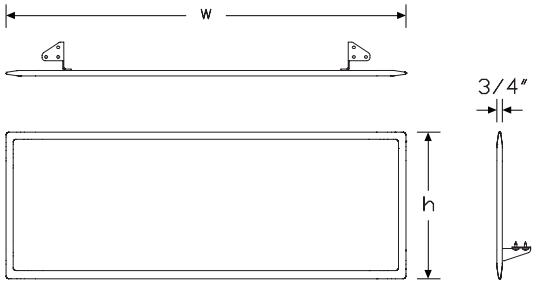

Specification Information

Step 1.

FT351. A

Step 2. Attachment

C Canvas surface attached A

Step 3. Height

42 42″ high A
46 46″ high A
53 53″ high A

Step 4. Width

40 39½″ wide A
42 42″ wide A
46 45½″ wide A
48 48″ wide A
52 51½″ wide A
54 54″ wide A
60 60″ wide A
66 66″ wide A
72 72″ wide A

Step 5. Surface Material

For 39½″ wide (40), 42″ wide (42), 45½″ wide (46), or 48″ wide (48)

R tackable fabric, horizontal A
T tackable fabric A

For 51½″ wide (52)

R tackable fabric, horizontal A

For 54″ wide (54), 60″ wide (60), 66″ wide (66), or 72″ wide (72)

R tackable fabric, horizontal A

Prices for Steps 1-5.

			40R	40T	42R	42T	46R	46T
FT351.	**C**	**42**	$984	984	1019	1019	1032	1032
		46	$1064	1064	1104	1104	1157	1157
		53	$1287	1287	1390	1390	1449	1449

			48R	48T	52R	54R	60R	66R
FT351.	**C**	**42**	$1050	1050	1136	1163	1242	1331
		46	$1217	1217	1299	1331	1428	1505
		53	$1465	1465	1530	1549	1576	1621

			72R
FT351.	**C**	**42**	$1402
		46	$1563
		53	$1651

Step 6. Bracket Finish		
G1	graphite (CP) A	+$0

Step 7. Fabric

For 39½" wide (40), 42" wide (42), 45½" wide (46), or 48" wide (48)	
Price Category B	+$136
Price Category 1	+$0
Price Category 2	+$28
Price Category 3	+$65
Price Category 4	+$113
Price Category 5	+$0
Price Category C	+$167
Price Category E	+$281

For 51½" wide (52), 54" wide (54), or 60" wide (60)	
Price Category B	+$160
Price Category 1	+$0
Price Category 2	+$32
Price Category 3	+$78
Price Category 4	+$136
Price Category 5	+$0
Price Category C	+$234
Price Category E	+$281

For 66" wide (66) or 72" wide (72)	
Price Category B	+$190
Price Category 1	+$0
Price Category 2	+$40
Price Category 3	+$94
Price Category 4	+$162
Price Category 5	+$0
Price Category C	+$234
Price Category E	+$281

Pari Screen, Surface Attached with Modesty

FT353.

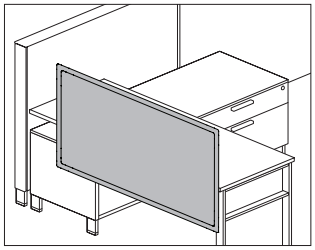

Product Information

Description

This tackable fabric screen attaches to a Canvas work surface to provide boundary and modesty with a tackable surface. An optional cable management trough is available. Trough finish is graphite. Attachment hardware included.

Notes

Screen widths are actual dimensions, and extend to the end of Canvas work surfaces.

Screen extends 10″ below surface for modesty.

Screen can be flush with back edge of surface, or provide a 1″ gap.

Screens 48″ wide and wider include an additional 1″-wide center mounting bracket.

Screen accepts Customer's Own Material (COM). Yardage is estimated for nondirectional 54″-wide fabrics.

For vertical fabric direction (T):

Height—Yardage

42—1.90

46—2.14

53—2.59

For horizontal fabric direction (R):

Width—Yardage

40—2.87

42—3.02

46—3.22

48—3.41

52—3.63

54—3.78

60—4.17

66—4.54

72—4.92

For information on multiple quantities or directional fabrics, contact COM Department. See Order Information in Appendices.

Dimensions

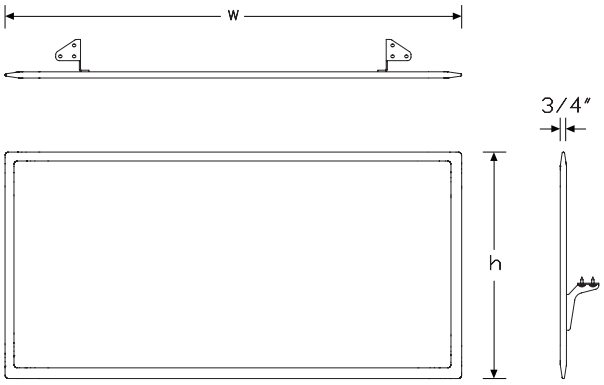

Specification Information

Step 1.

FT353. A

Step 2. Attachment

C	Canvas surface attached A

Step 3. Height

A42	42″ high/10″ below surface A
A46	46″ high/10″ below surface A
A53	53″ high/10″ below surface A

Step 4. Width

40	39½″ wide A
42	42″ wide A
46	45½″ wide A
48	48″ wide A
52	51½″ wide A
54	54″ wide A
60	60″ wide A
66	66″ wide A
72	72″ wide A

Step 5. Surface Material

For 39½″ wide (40), 42″ wide (42), 45½″ wide (46), or 48″ wide (48)

R	tackable fabric, horizontal A
T	tackable fabric A

For 51½″ wide (52)

R	tackable fabric, horizontal A

For 54″ wide (54), 60″ wide (60), 66″ wide (66), or 72″ wide (72)

R	tackable fabric, horizontal A

Prices for Steps 1-5.

			40R	40T	42R	42T	46R	46T
FT353.	**C**	**A42**	$1121	1121	1157	1157	1275	1275
		A46	$1287	1287	1359	1359	1415	1415
		A53	$1480	1480	1505	1505	1602	1602

			48R	48T	52R	54R	60R	66R
FT353.	**C**	**A42**	$1287	1287	1417	1449	1480	1595
		A46	$1460	1460	1516	1530	1621	1703
		A53	$1621	1621	1657	1678	1735	1883

			72R
FT353.	**C**	**A42**	$1639
		A46	$1743
		A53	$1917

Step 6. Cable Trough

NC	no cable way A	+$0
CW	cable way A	+$25

Step 7. Cable Trough Finish

G1	graphite (CP) A	+$0

Step 8. Bracket Finish

G1	graphite (CP) A	+$0

Step 9. Fabric

For 39½″ wide (40), 42″ wide (42), 45½″ wide (46), or 48″ wide (48)

Price Category B	+$244
Price Category 1	+$0
Price Category 2	+$43
Price Category 3	+$103
Price Category 4	+$180
Price Category 5	+$0
Price Category C	+$336
Price Category E	+$509

For 51½″ wide (52), 54″ wide (54), or 60″ wide (60)

Price Category B	+$322
Price Category 1	+$0
Price Category 2	+$62
Price Category 3	+$148
Price Category 4	+$257
Price Category 5	+$0
Price Category C	+$436
Price Category E	+$659

For 66″ wide (66) or 72″ wide (72)

Price Category B	+$378
Price Category 1	+$0
Price Category 2	+$77
Price Category 3	+$185
Price Category 4	+$320
Price Category 5	+$0
Price Category C	+$436
Price Category E	+$659

Pari Screen, Height Adjustable Tables Y1116.

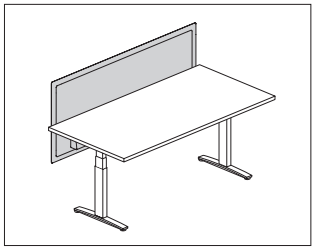

Product Information

Description

This screen attaches to an individual height adjustable work surface. It has an all-fabric, tackable surface with frameless design, and comes in privacy and modesty sizes. Attachment hardware included.

Notes

Privacy and modesty panel actual width is 2″ less than specified width.

Privacy screen (A) top edge aligns with the 42″ high Canvas datum line; bottom edge is 4″ below work surface.

Privacy & modesty screen (B) top edge aligns with the 42″ high Canvas datum line; bottom edge is 10″ below work surface.

Privacy screen (C) top edge aligns with the 46″ high Canvas datum line; bottom edge is 4″ below work surface.

Privacy & modesty screen (D) top edge aligns with the 46″ high Canvas datum line; bottom edge is 10″ below work surface.

Privacy screen (E) top edge aligns with the 53″ high Canvas datum line; bottom edge is 4″ below work surface.

Privacy & modesty screen (F) top edge aligns with the 53″ high Canvas datum line; bottom edge is 10″ below work surface.

Screens 54″ wide and wider include an additional 1″-wide center mounting bracket.

Recommended mounting creates a 1″ gap between back edge of surface and the screen to accommodate cable routing and the attachment or clamp-mounting of other hardware to the surface.

Optional cable management trough is only available when specifying privacy & modesty height option (B). Trough finish is graphite.

Attachment brackets are inset from edge of screen by approximately 8″ and require 2½″ of work surface for attachment.

Attachment bracket finish is painted graphite.

Screen accepts Customer's Own Material (COM). Yardage is estimated for nondirectional 54″-wide fabrics.

For vertical fabric direction (T):

Height—Yardage

A—1.51
B—1.89
C—1.76
D—2.14
E—2.21
F—2.58

For horizontal fabric direction (R):

Width—Yardage

For heights A/B:

24—0.88
30—1.07
36—1.26
42—1.45
48—1.64
54—1.83
60—2.02
66—2.21
72—2.39

For heights C/D/E/F:

24—1.76
30—2.14
36—2.52
42—2.90
48—3.28
54—3.65
60—4.03
66—4.41
72—4.79

For information on multiple quantities or directional fabrics, contact COM Department. See Order Information in Appendices.

MicrobeCare™ is an antimicrobial coating applied to the fabric surface of this product.

MicrobeCare™ protects products from mold, mildew, algae, and bacteria that cause deterioration, discoloration, odors, and stains.

MicrobeCare™ is registered with the US Environmental Protection Agency (EPA).

Dimensions

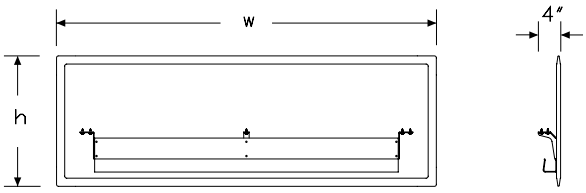

Specification Information

Step 1.

Y1116. A

Step 2. Height

A	privacy (42″ high) A
B	privacy & modesty (42″ high/10″ below surface) A
C	privacy (46″ high) A
D	privacy & modesty (46″ high/10″ below surface) A
E	privacy (53″ high) A
F	privacy & modesty (53″ high/10″ below surface) A

Step 3. Width

24	24″ wide A
30	30″ wide A
36	36″ wide A
42	42″ wide A
48	48″ wide A
54	54″ wide A
60	60″ wide A
66	66″ wide A
72	72″ wide A

Step 4. Surface Material

For 24″ wide (24), 30″ wide (30), 36″ wide (36), 42″ wide (42), or 48″ wide (48)

R	tackable fabric, horizontal A
T	tackable fabric A
D	tackable fabric, horizontal with MicrobeCare™ A
E	tackable fabric with MicrobeCare™ A

For 54″ wide (54), 60″ wide (60), 66″ wide (66), or 72″ wide (72)

R	tackable fabric, horizontal A
D	tackable fabric, horizontal with MicrobeCare™ A

Prices for Steps 1-4.

			R	T	D	E
Y1116.	**A**	**24**	$556	556	625	625
		30	$645	645	712	712
		36	$670	670	738	738
		42	$710	710	779	779
		48	$736	736	805	805
		54	$808	—	876	—
		60	$868	—	937	—
		66	$927	—	998	—
		72	$979	—	1046	—
	B	**24**	$671	671	739	739
		30	$719	719	786	786
		36	$765	765	832	832
		42	$808	808	876	876
		48	$897	897	965	965
		54	$1009	—	1077	—
		60	$1035	—	1103	—
		66	$1113	—	1182	—
		72	$1141	—	1210	—
	C	**24**	$632	632	700	700
		30	$676	676	744	744
		36	$724	724	792	792
		42	$768	768	836	836
		48	$848	848	915	915
		54	$933	—	1000	—
		60	$1039	—	1107	—
		66	$1089	—	1157	—
		72	$1133	—	1200	—
	D	**24**	$812	812	879	879
		30	$855	855	923	923
		36	$901	901	969	969
		42	$946	946	1014	1014
		48	$1017	1017	1087	1087
		54	$1067	—	1135	—
		60	$1130	—	1198	—
		66	$1187	—	1255	—
		72	$1218	—	1285	—
	E	**24**	$831	831	899	899
		30	$876	876	944	944
		36	$921	921	988	988
		42	$993	993	1062	1062
		48	$1022	1022	1091	1091
		54	$1080	—	1150	—
		60	$1102	—	1171	—
		66	$1129	—	1197	—
		72	$1155	—	1223	—
	F	**24**	$915	915	983	983
		30	$959	959	1028	1028
		36	$1006	1006	1074	1074
		42	$1051	1051	1119	1119
		48	$1131	1131	1199	1199
		54	$1171	—	1238	—
		60	$1214	—	1282	—
		66	$1313	—	1380	—
		72	$1338	—	1406	—

Step 5. Cable Trough		
For privacy & modesty (42" high/10" below surface) (B), privacy & modesty (46" high/10" below surface) (D), or privacy & modesty (53" high/10" below surface) (F)		
NC	no cable way A	+$0
CW	cable way A	+$25

Step 6. Fabric	
Price Category 1	+$0
Price Category 2	+$23
Price Category 3	+$49
Price Category 4	+$96
Price Category 5	+$162
Price Category B	+$86
Price Category C	+$121
Price Category E	+$182

Pari Screen, Delineation FT354.

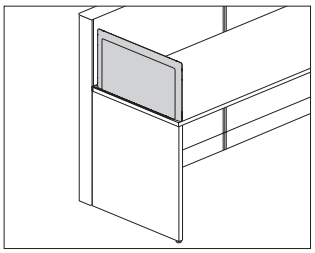

Product Information

Description

This tackable fabric screen attaches to a work surface either at the seam or at the right or left edge to provide division and boundary between workers. It attaches with no interference from supports below the work surface. Attachment hardware included.

Notes

Screen height is 13½″ or 17½″ above work surface, aligning with bead heights of 41″ and 45″.

Screen width matches work surface depths that have a 1″ gap at the back edge.

2 attachment methods ship with the end-of-run right handed (CR) and end-of-run left handed (CL) screen. The screen can be installed using the bracket, or using threaded screws that drill bayonets directly into the surface. See planning guide for exact location of holes.

End-of-run screen does not work on Canvas Beam.

See planning guide for applications and other compatible product lines.

Screen accepts Customer's Own Material (COM). Yardage is estimated for nondirectional 54″-wide fabrics.

For vertical fabric direction (T):

Height—Yardage

42—1.19

46—1.45

For horizontal fabric direction (R):

Width—Yardage

24—0.90

30—1.10

36—1.30

For information on multiple quantities or directional fabrics, contact COM Department. See Order Information in Appendices.

Dimensions

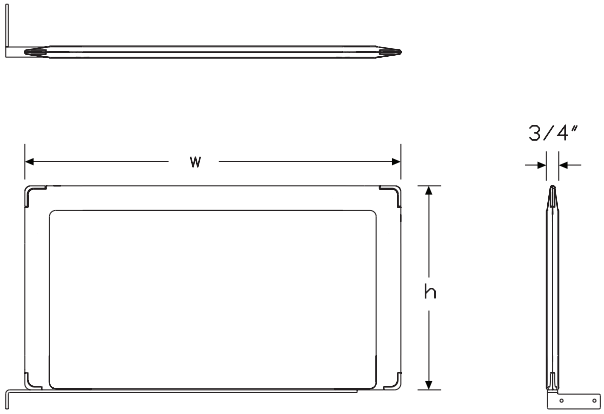

Specification Information

Step 1.

FT354. A

Step 2. Attachment Type

CL	Canvas Surface Attached, End of Run Left Handed A
CR	Canvas Surface Attached, End of Run Right Handed A

Step 3. Height

42	42″ high A
46	46″ high A

Step 4. Width

24	24″ wide A
30	30″ wide A
36	36″ wide A

Step 5. Surface Material

R	tackable fabric, horizontal A
T	tackable fabric A

Prices for Steps 1-5.

			24R	24T	30R	30T	36R	36T
FT354.	**CL**	**42**	$1139	1139	1178	1178	1212	1212
		46	$1198	1198	1245	1245	1294	1294
	CR	**42**	$1139	1139	1178	1178	1212	1212
		46	$1198	1198	1245	1245	1294	1294

Step 6. Bracket Finish

UBK	ultra black (CP) A	+$0
8Q	folkstone grey (CP) A	+$0
91	white (CP) A	+$0
98	studio white (CP) A	+$0
BK	black A	+$0
G1	graphite (CP) A	+$0
SNA	satin aluminum A	+$10
SNB	satin bronze A	+$10
SNC	satin carbon A	+$10
WL	warm stone (CP) A	+$0
WN	warm grey neutral A	+$0

Step 7. Fabric

Price Category 1	+$0
Price Category 2	+$20
Price Category 3	+$48
Price Category 4	+$84
Price Category 5	+$102
Price Category B	+$378
Price Category C	+$128
Price Category E	+$203

Pari Screen, Storage Attached FV360.

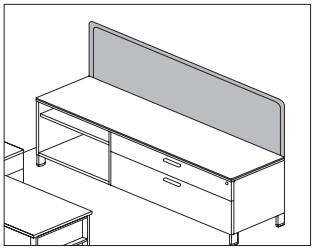

Product Information

Description

This tackable fabric screen attaches to a Canvas low credenza using the thin top and provides boundary with a tackable surface. Attachment hardware included.

Notes

Order credenza thin top separately:

- Credenza top for wood credenza (FF889.)
- Credenza top for metal credenza (FM889.)

Predrilled holes near back edge of credenza thin top allow for bayonets to extend up to support the screen.

Works with standard and powered Canvas credenzas.

Screen accepts Customer's Own Material (COM). Yardage is estimated for nondirectional 54″-wide fabrics.

For vertical fabric direction (T):

Height—Yardage

24—0.95

30—1.14

36—1.32

For horizontal fabric direction (R), for 42″ high:

Width—Yardage

24—0.95

30—1.14

36—1.32

42—1.51

48—1.71

60—2.07

66—2.27

72—2.46

For horizontal fabric direction (R), for 46″ high and 53″ high:

Width—Yardage

24—1.90

30—2.27

36—2.66

42—3.02

48—3.41

60—4.17

66—4.54

72—4.92

For information on multiple quantities or directional fabrics, contact COM Department. See Order Information in Appendices.

Dimensions

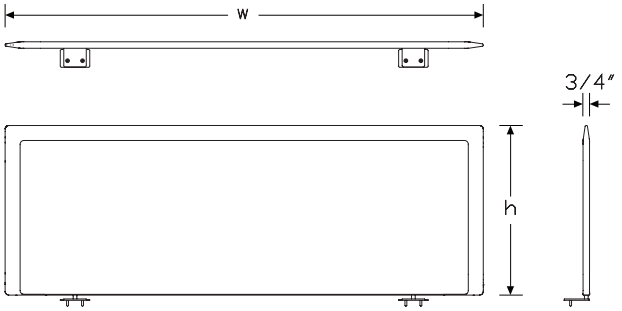

Specification Information

Step 1.

FV360. A

Step 2. Attachment

CS	Canvas credenza attached, single A
CB	Canvas credenza attached, back to back A

Step 3. Height

42	42″ high A
46	46″ high A
53	53″ high A

Step 4. Width

30	30″ wide A
36	36″ wide A
42	42″ wide A
48	48″ wide A
60	60″ wide A
66	66″ wide A
72	72″ wide A

Step 5. Surface Material

For 30″ wide (30), 36″ wide (36), 42″ wide (42), or 48″ wide (48)

R	tackable fabric, horizontal A
T	tackable fabric A

For 60″ wide (60), 66″ wide (66), or 72″ wide (72)

R	tackable fabric, horizontal A

Prices for Steps 1-5.

			30R	30T	36R	36T	42R	42T
FV360.	**CS**	**42**	$1077	1077	1120	1120	1185	1185
		46	$1120	1120	1252	1252	1316	1316
		53	$1316	1316	1383	1383	1601	1601
	CB	**42**	$1077	1077	1120	1120	1185	1185
		46	$1120	1120	1252	1252	1316	1316
		53	$1316	1316	1383	1383	1601	1601

			48R	48T	60R	66R	72R
FV360.	**CS**	**42**	$1383	1383	1579	1609	1646
		46	$1446	1446	1646	1739	1776
		53	$1710	1710	1908	2004	2038
	CB	**42**	$1383	1383	1579	1609	1646
		46	$1446	1446	1646	1739	1776
		53	$1710	1710	1908	2004	2038

Step 6. Fabric

For 30″ wide (30), 36″ wide (36), or 42″ wide (42)

Price Category B	+$113
Price Category 1	+$0
Price Category 2	+$37
Price Category 3	+$89
Price Category 4	+$152
Price Category 5	+$288
Price Category C	+$155
Price Category E	+$264

For 48″ wide (48) or 60″ wide (60)

Price Category B	+$188
Price Category 1	+$0
Price Category 2	+$46
Price Category 3	+$108
Price Category 4	+$187
Price Category 5	+$288
Price Category C	+$205
Price Category E	+$314

For 66″ wide (66) or 72″ wide (72)

Price Category B	+$262
Price Category 1	+$0
Price Category 2	+$61
Price Category 3	+$145
Price Category 4	+$253
Price Category 5	+$416
Price Category C	+$281
Price Category E	+$390

Pari Screen, Freestanding/Surface Attached FD300.

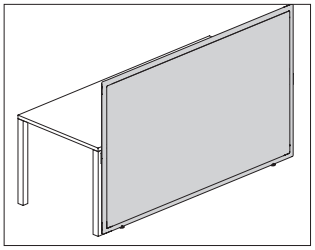

Product Information

Description

This tackable fabric screen is 42″ or 46″ high. It has an all fabric surface and a frameless edge. Includes 2 adjustable glides for leveling.

Notes

Screen can be freestanding when connected in 90° or 120° configurations. See planning guide for more information.

Screen can be connected inline (180°). See planning guide for connection rules.

Screen can be attached to:

- Canvas dock
- Table or surface
- Canvas low storage

Screen accepts Customer's Own Material (COM). Yardage is estimated for nondirectional 54″-wide fabrics.

For vertical fabric direction (T), for 42″ high:
Width—Yardage
15, 20—1.49
24, 30, 36, 42, 48—2.96

For vertical fabric direction (T), for 46″ high:
Width—Yardage
15, 20—1.60
24, 30, 36, 42, 48—3.22

For horizontal fabric direction (R), for 42″ high and 46″ high:
Width—Yardage
15—1.32
20—1.64
24—1.90
30—2.27
36—2.66
42—3.02

For horizontal fabric direction (R), for 42″ high:
Width—Yardage
48—3.41
54—3.78
60—4.17
66—4.54
72—4.92

For horizontal fabric direction (R), for 46″ high:
Width—Yardage
48—3.41
60—4.17
72—4.92

For information on multiple quantities or directional fabrics, contact COM Department. See Order Information in Appendices.

Dimensions

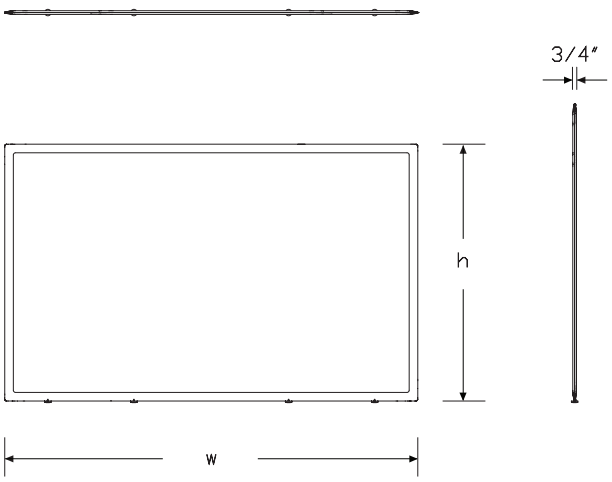

Pari Screen, Freestanding/Surface Attached *continued*

Specification Information

Step 1.

FD300. A

Step 2. Type

F	fabric/fabric

Step 3. Height

42	42″ high
46	46″ high

Step 4. Width

For 42″ high (42)

15	15″ wide
20	20″ wide
24	24″ wide
30	30″ wide
36	36″ wide
42	42″ wide
48	48″ wide
54	54″ wide
60	60″ wide
66	66″ wide
72	72″ wide

For 46″ high (46)

15	15″ wide
20	20″ wide
24	24″ wide
30	30″ wide
36	36″ wide
42	42″ wide
48	48″ wide
60	60″ wide
72	72″ wide

Step 5. Surface Material

For 15″ wide (15), 20″ wide (20), 24″ wide (24), 30″ wide (30), 36″ wide (36), 42″ wide (42), or 48″ wide (48)

T	tackable fabric
R	tackable fabric, horizontal

For 54″ wide (54), 60″ wide (60), 72″ wide (72), or 66″ wide (66)

R	tackable fabric, horizontal

Prices for Steps 1-5.

		15T	15R	20T	20R	24T	24R
FD300. F	**42**	$1177	1177	1252	1252	1470	1470
	46	$1265	1265	1353	1353	1543	1543

		30T	30R	36T	36R	42T	42R
FD300. F	**42**	$1543	1543	1617	1617	1691	1691
	46	$1654	1654	1762	1762	1874	1874

		48T	48R	54R	60R	66R	72R
FD300. F	**42**	$1762	1762	1874	1984	2202	2349
	46	$1874	2202	—	2533	—	2716

Step 6. Fabric

For 42″ high (42) or 46″ high (46) with 15″ wide (15), or 20″ wide (20), or 24″ wide (24)

Price Category B	+$138
Price Category 1	+$0
Price Category 2	+$29
Price Category 3	+$68
Price Category 4	+$119
Price Category 5	+$0
Price Category C	+$188
Price Category E	+$288

For 42″ high (42) or 46″ high (46) with 30″ wide (30), or 36″ wide (36), or 42″ wide (42)

Price Category B	+$218
Price Category 1	+$0
Price Category 2	+$46
Price Category 3	+$108
Price Category 4	+$187
Price Category 5	+$0
Price Category C	+$298
Price Category E	+$0

For 42″ high (42) or 46″ high (46) with 48″ wide (48), 54″ wide (54), or 60″ wide (60), or 72″ wide (72), or 66″ wide (66)

Price Category B	+$300
Price Category 1	+$0
Price Category 2	+$62
Price Category 3	+$149
Price Category 4	+$258
Price Category 5	+$0
Price Category C	+$410
Price Category E	+$0

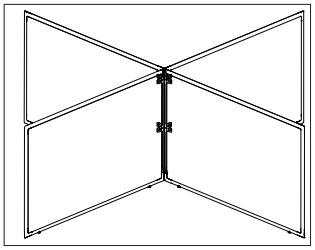

Product Information

Description

This painted metal hardware connects multiple freestanding screens in 90°, 120°, and 180° configurations.

Notes

Order Pari screen, freestanding/surface attached (FD300.) separately.

See planning guide for planning rules.

Dimensions

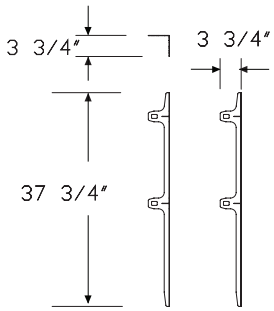

90 Degree 2 way

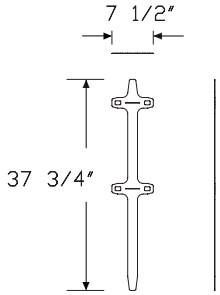

180 Degree 2 way

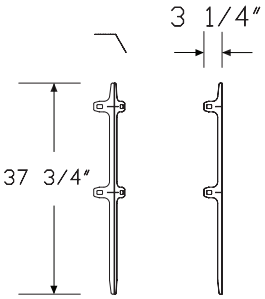

120 Degree 2 way

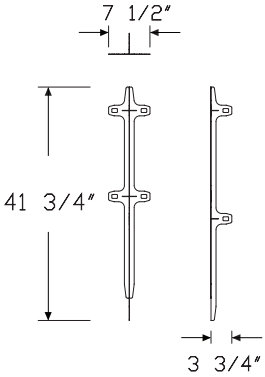

90 Degree 3 way

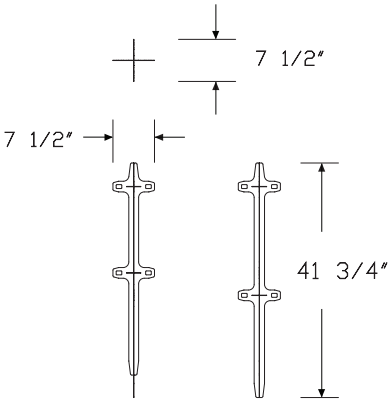

90 Degree 4 way

Specification Information

Step 1.

FD311. A

Step 2. Configuration

1	90° connection - 2 screens
2	120° connection - 2 screens
3	3-way connection - 90°
4	4-way connection - 90°
5	180° connection - inline - 2 screens

Step 3. Height

42	42″ high
46	46″ high

Prices for Steps 1-3.

		42	46
FD311.	**1**	$77	96
	2	$77	96
	3	$178	197
	4	$225	242
	5	$122	138

Step 4. Finish

Metallic Paint

613	silver (CP) A	+$0
SNA	satin aluminum	+$10
SNB	satin bronze	+$10
SNC	satin carbon	+$10

Sand Texture Paint

BK	black	+$0
G1	graphite (CP)	+$0
UBK	ultra black (CP) A	+$0
WN	warm grey neutral	+$0

Smooth Paint

8Q	folkstone grey (CP)	+$0
91	white (CP)	+$0
98	studio white (CP)	+$0
WL	warm stone (CP)	+$0

Bracket Hardware, Work Surface/Low Storage FD312.

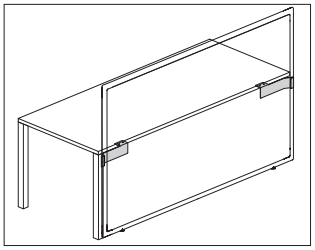

Product Information

Description

This metal hardware attaches Canvas freestanding screens to a work surface or Canvas low storage. Package of 2 brackets.

Notes

Used with fixed height surfaces.

Provides 1″ cable management gap between screen and back of surface or storage.

See planning guide for connection and support rules.

Dimensions

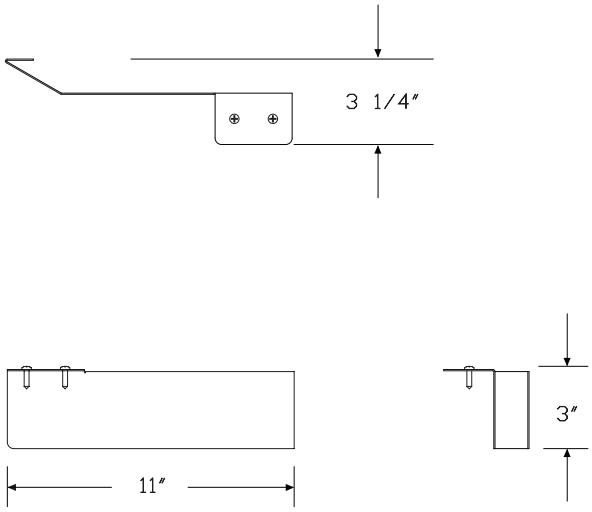

Specification Information

Step 1.

FD312. A

Step 2. Configuration

1	connection hardware to surface - pair
3	connection hardware to low storage

Prices for Steps 1-2.

FD312.	**1**	$245
	3	$245

Step 3. Finish

Metallic Paint

613	silver (CP) A	+$0
SNA	satin aluminum	+$10
SNB	satin bronze	+$10
SNC	satin carbon	+$10

Sand Texture Paint

BK	black	+$0
UBK	ultra black (CP) A	+$0

Smooth Paint

8Q	folkstone grey (CP)	+$0
91	white (CP)	+$0
98	studio white (CP)	+$0
G1	graphite (CP)	+$0
WL	warm stone (CP)	+$0
WN	warm grey neutral	+$0

Dock to Screen Bracket, Screens FD313.

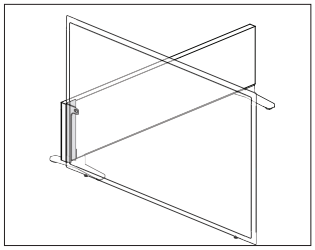

Product Information

Description

This bracket connects the Canvas freestanding screen to a Canvas dock wall run.

Notes

Bracket attaches on left or right end of dock. Handedness determined when user is facing the dock.

See planning guide for planning rules.

Dimensions

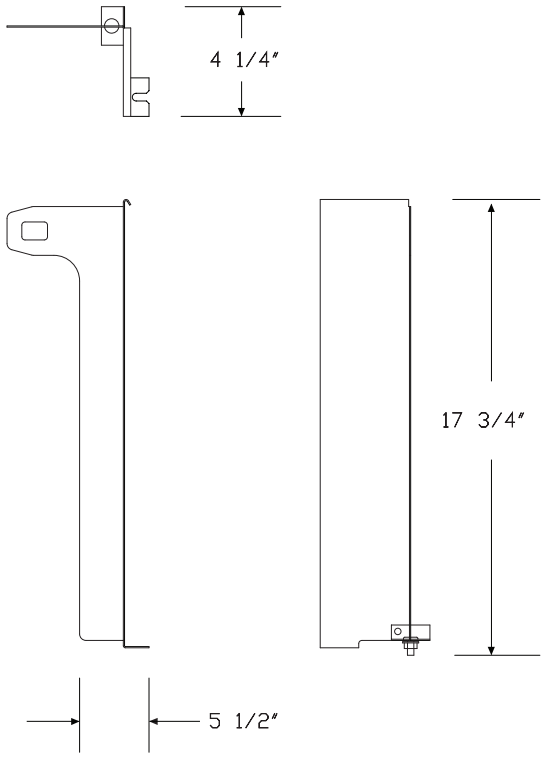

Specification Information

Step 1.

FD313. A

Step 2. Configuration

1	connection hardware to Canvas Dock

Step 3. Position

L	left
R	right

Prices for Steps 1-3.

	L	R
FD313. 1	$128	128

Step 4. Finish

Metallic Paint

613	silver (CP) A	+$0
SNA	satin aluminum	+$10
SNB	satin bronze	+$10
SNC	satin carbon	+$10

Sand Texture Paint

8Q	folkstone grey (CP)	+$0
91	white (CP)	+$0
98	studio white (CP)	+$0
BK	black	+$0
G1	graphite (CP)	+$0
UBK	ultra black (CP) A	+$0
WL	warm stone (CP)	+$0
WN	warm grey neutral	+$0

Bracket Hardware, Screens to Renew Table FD314.

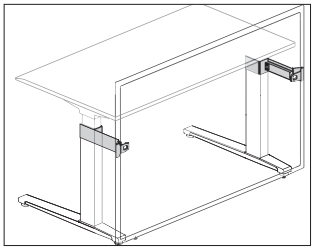

Product Information

Description

This pair of metal brackets attaches a Canvas freestanding/surface attached screen to the legs of a Renew™ table. Attachment hardware included.

Notes

Compatible with Renew table legs only.

Specify size to match depth of Renew table.

Dimensions

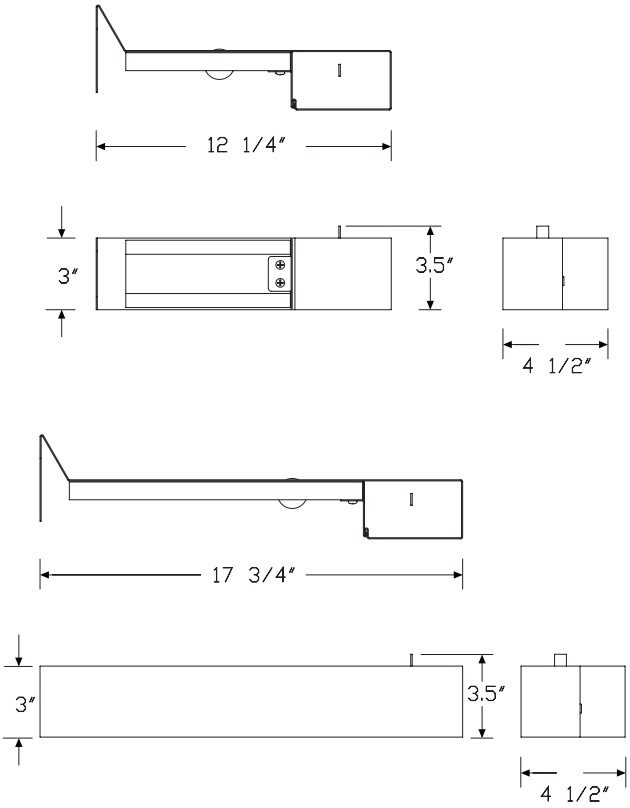

Specification Information

Step 1.

FD314. A

Step 2. Configuration

1	connection hardware to Renew table leg - pair

Step 3. Size

24C	24″ deep renew table - C Foot
30C	30″ deep renew table - C Foot
30T	30″ deep renew table - T Foot

Prices for Steps 1-3.

	24C	30C	30T
FD314. 1	$289	289	289

Step 4. Finish

Metallic Paint

613	silver (CP) A	+$0
SNA	satin aluminum	+$10
SNB	satin bronze	+$10
SNC	satin carbon	+$10

Sand Texture Paint

8Q	folkstone grey (CP)	+$0
91	white (CP)	+$0
98	studio white (CP)	+$0
BK	black	+$0
G1	graphite (CP)	+$0
UBK	ultra black (CP) A	+$0
WL	warm stone (CP)	+$0
WN	warm grey neutral	+$0

Bracket Hardware, Pari Freestanding Screen/Low Credenza FD315.

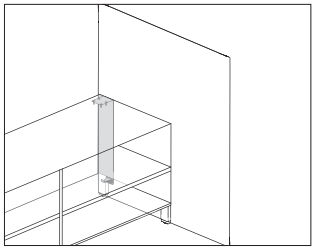

Product Information

Description

This metal hardware attaches Canvas freestanding screens perpendicularly to Canvas low storage.

Notes

See planning guide for connection and support rules.

Dimensions

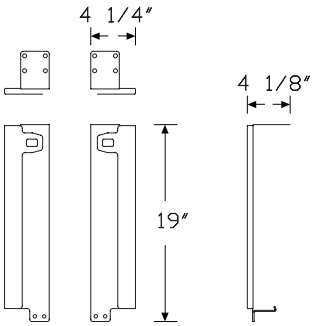

Wooden Attachments

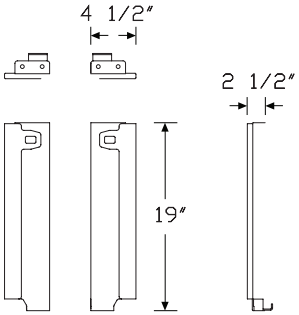

Metal Attachments

Specification Information

Step 1.

FD315. A

Step 2. Storage Type

W	for use with wood low credenza with 4″ high foot
M	for use with metal low credenza with 4″ high foot

Step 3. Credenza Attachment Location

L	left end of credenza
R	right end of credenza

Prices for Steps 1-3.

		L	R
FD315.	**W**	$193	193
	M	$193	193

Step 4. Finish

Metallic Paint

613	silver (CP) A	+$0
SNA	satin aluminum	+$10
SNB	satin bronze	+$10
SNC	satin carbon	+$10

Sand Texture Paint

91	white (CP)	+$0
BK	black	+$0
G1	graphite (CP)	+$0
UBK	ultra black (CP) A	+$0

Flat Edge Screen, Dock Mounted FD116.

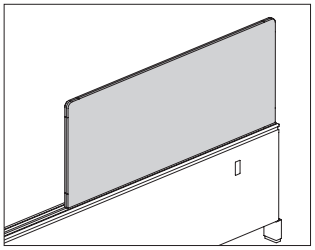

Product Information

Description

This tackable fabric screen attaches anywhere along the top rail of the 22″ high Canvas dock to extend the overall height and to provide boundary with a tackable surface. Attachment hardware included.

Notes

Screen accepts Customer's Own Material (COM). Yardage is estimated for nondirectional 54″-wide fabrics.

For vertical fabric direction (T):

Height—Yardage

20—1.58

24—1.84

31—2.27

35—2.53

For horizontal fabric direction (R), for 20″ high and 24″ high:

Width—Yardage

24—0.95

36—1.32

42—1.51

48—1.71

60—2.07

72—2.46

For horizontal fabric direction (R), for 31″ high and 35″ high:

Width—Yardage

24—1.90

36—2.66

42—3.02

48—3.41

60—4.17

72—4.92

For information on multiple quantities or directional fabrics, contact COM Department. See Order Information in Appendices.

Dimensions

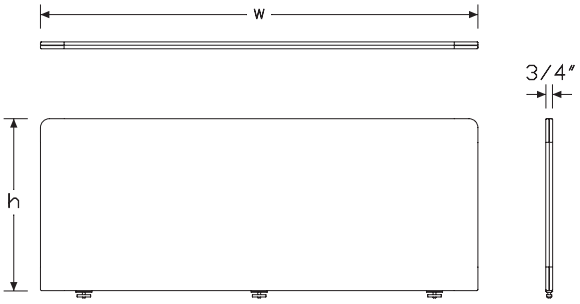

Flat Edge Screen, Dock Mounted

continued

Specification Information

Step 1.

FD116. A

Step 2. Fabric

F	fabric

Step 3. Height

20	20″ high (to reach datum of 42″H)
24	24″ high (to reach datum of 46″H)
31	31″ high (to reach datum of 53″H)
35	35″ high (to reach datum of 57″H)

Step 4. Width

24	24″ wide
36	36″ wide
42	42″ wide
48	48″ wide
60	60″ wide
72	72″ wide

Step 5. Surface Material

For 24″ wide (24), 36″ wide (36), 42″ wide (42), or 48″ wide (48)

T	tackable fabric
R	tackable fabric, horizontal

For 60″ wide (60) or 72″ wide (72)

R	tackable fabric, horizontal

Prices for Steps 1-5.

		24T	24R	36T	36R	42T	42R
FD116. F	**20**	$742	742	840	840	938	938
	24	$808	808	904	904	1002	1002
	31	$1067	1067	1166	1166	1262	1262
	35	$1197	1197	1294	1294	1393	1393

		48T	48R	60R	72R
FD116. F	**20**	$1038	1038	1132	1304
	24	$1101	1101	1197	1370
	31	$1363	1363	1458	1631
	35	$1494	1494	1587	1760

Step 6. Fabric

For 20″ high (to reach datum of 42″H) (20) with 24″ wide (24), or 36″ wide (36)

Price Category B	+$198
Price Category 1	+$0
Price Category 2	+$16
Price Category 3	+$37
Price Category 4	+$64
Price Category 5	+$0
Price Category C	+$96
Price Category E	+$149

For 20″ high (to reach datum of 42″H) (20) with 42″ wide (42), or 48″ wide (48)

Price Category B	+$198
Price Category 1	+$0
Price Category 2	+$22
Price Category 3	+$52
Price Category 4	+$89
Price Category 5	+$0
Price Category C	+$132
Price Category E	+$206

For 20″ high (to reach datum of 42″H) (20) with 60″ wide (60), or 72″ wide (72)

Price Category B	+$284
Price Category 1	+$0
Price Category 2	+$24
Price Category 3	+$59
Price Category 4	+$102
Price Category 5	+$0
Price Category C	+$160
Price Category E	+$236

For 24″ high (to reach datum of 46″H) (24) with 24″ wide (24), or 36″ wide (36)

Price Category B	+$198
Price Category 1	+$0
Price Category 2	+$24
Price Category 3	+$59
Price Category 4	+$102
Price Category 5	+$0
Price Category C	+$162
Price Category E	+$236

Flat Edge Screen, Dock Mounted

continued

For 24" high (to reach datum of 46"H) (24) with 42" wide (42), or 48" wide (48)	
Price Category B	+$198
Price Category 1	+$0
Price Category 2	+$28
Price Category 3	+$66
Price Category 4	+$115
Price Category 5	+$0
Price Category C	+$178
Price Category E	+$268

For 24" high (to reach datum of 46"H) (24) with 60" wide (60), or 72" wide (72)	
Price Category B	+$284
Price Category 1	+$0
Price Category 2	+$34
Price Category 3	+$80
Price Category 4	+$140
Price Category 5	+$0
Price Category C	+$212
Price Category E	+$323

For 31" high (to reach datum of 53"H) (31) with 24" wide (24), or 36" wide (36)	
Price Category B	+$198
Price Category 1	+$0
Price Category 2	+$31
Price Category 3	+$73
Price Category 4	+$128
Price Category 5	+$0
Price Category C	+$194
Price Category E	+$296

For 31" high (to reach datum of 53"H) (31) with 42" wide (42), or 48" wide (48)	
Price Category B	+$198
Price Category 1	+$0
Price Category 2	+$43
Price Category 3	+$103
Price Category 4	+$180
Price Category 5	+$0
Price Category C	+$271
Price Category E	+$415

For 31" high (to reach datum of 53"H) (31) with 60" wide (60), or 72" wide (72)	
Price Category B	+$284
Price Category 1	+$0
Price Category 2	+$49
Price Category 3	+$118
Price Category 4	+$204
Price Category 5	+$0
Price Category C	+$310
Price Category E	+$472

For 35" high (to reach datum of 57"H) (35) with 24" wide (24), or 36" wide (36)	
Price Category B	+$198
Price Category 1	+$0
Price Category 2	+$55
Price Category 3	+$132
Price Category 4	+$230
Price Category 5	+$0
Price Category C	+$350
Price Category E	+$533

For 35" high (to reach datum of 57"H) (35) with 42" wide (42), or 48" wide (48)	
Price Category B	+$198
Price Category 1	+$0
Price Category 2	+$68
Price Category 3	+$162
Price Category 4	+$282
Price Category 5	+$0
Price Category C	+$426
Price Category E	+$652

For 35" high (to reach datum of 57"H) (35) with 60" wide (60), or 72" wide (72)	
Price Category B	+$284
Price Category 1	+$0
Price Category 2	+$80
Price Category 3	+$191
Price Category 4	+$332
Price Category 5	+$0
Price Category C	+$504
Price Category E	+$768

Flat Edge Screen, Stanchion Infill FD437.

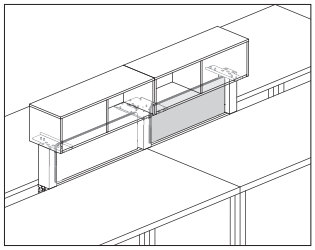

Product Information

Description

This tackable fabric screen fits between 2 stanchions below a dock mounted storage cabinet. Attachment hardware included.

Notes

Fabric infill is used between single or shared stanchions.

Fabric infill can be installed and removed with storage cabinet (FD415.) installed.

Specify fabric infill width to match the width of storage cabinet (FD415.).

An opening is created between infill and stanchion at each end of infill.

- Single stanchion at each end, openings are ¾″
- Single stanchion at 1 end and shared stanchion at 1 end, openings are 1¼″
- Shared stanchion at each end, openings are 1¾″

Screen accepts Customer's Own Material (COM). Yardage is estimated for nondirectional 54″-wide fabrics.

For vertical fabric direction (T):

Height—Yardage

16—1.30

20—1.53

For horizontal fabric direction (R):

Width—Yardage

36—1.17

42—1.36

48—1.53

60—1.92

72—2.29

For information on multiple quantities or directional fabrics, contact COM Department. See Order Information in Appendices.

Dimensions

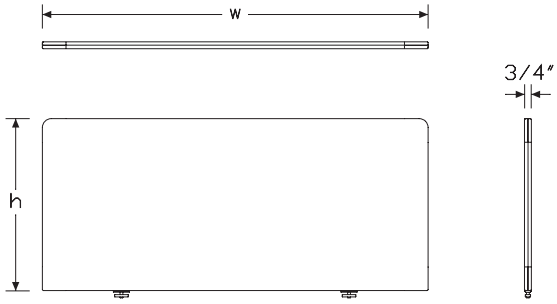

Specification Information

Step 1.

FD437. A

Step 2. Height

16 16″ high for overhead storage at 53″ high

20 20″ high for overhead storage at 57″ high

Step 3. Width

36 36″ wide

42 42″ wide

48 48″ wide

60 60″ wide

72 72″ wide

Step 4. Surface Material

For 36″ wide (36), 42″ wide (42), or 48″ wide (48)

R tackable fabric, horizontal

T tackable fabric

For 60″ wide (60) or 72″ wide (72)

R tackable fabric, horizontal

Prices for Steps 1-4.

			R	T
FD437.	**16**	**36**	$899	899
		42	$1014	1014
		48	$1128	1128
		60	$1239	—
		72	$1429	—
	20	**36**	$971	971
		42	$1086	1086
		48	$1199	1199
		60	$1453	—
		72	$1645	—

Step 5. Fabric	
For 36" wide (36), 42" wide (42), or 48" wide (48)	
Price Category B	+$113
Price Category 1	+$0
Price Category 2	+$22
Price Category 3	+$50
Price Category 4	+$88
Price Category 5	+$0
Price Category C	+$127
Price Category E	+$234
For 60" wide (60) or 72" wide (72)	
Price Category B	+$149
Price Category 1	+$0
Price Category 2	+$37
Price Category 3	+$88
Price Category 5	+$0
Price Category C	+$223
Price Category E	+$234

Flat Edge Screen, Surface Attached with Modesty FT357.

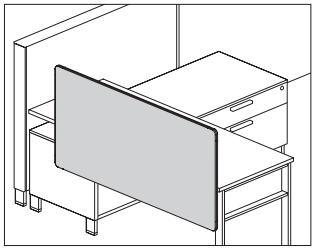

Product Information

Description

This tackable fabric screen attaches to a Canvas work surface to provide boundary and modesty with a tackable surface. An optional cable management trough is available. Trough finish is graphite. Attachment hardware included.

Notes

Screen heights are overall datum heights to align with Canvas Office Landscape®; they are not the actual heights of screens.
42″-high (A42) screen is a nominal 13″ above work surface.
46″-high (A46) screen is a nominal 17″ above work surface.
53″-high (A53) screen is a nominal 24″ above work surface.

Screen widths are actual dimensions, and extend to the end of Canvas work surfaces.

Screen extends 9″ below surface for modesty.

Screen can be flush with back edge of surface, or provide a 1″ gap.

Screens 48″ wide and wider include an additional 1″-wide center mounting bracket.

Screen accepts Customer's Own Material (COM). Yardage is estimated for nondirectional 54″-wide fabrics.
For vertical fabric direction (T):
Height—Yardage
42—1.90
46—2.14
53—2.59
For horizontal fabric direction (R):
Width—Yardage
40—2.87
42—3.02
46—3.22
48—3.41
52—3.63
54—3.78
60—4.17
66—4.54
72—4.92
For information on multiple quantities or directional fabrics, contact COM Department. See Order Information in Appendices.

Dimensions

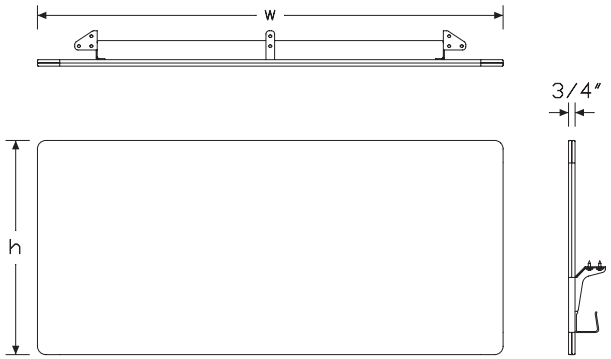

Flat Edge Screen, Surface Attached with Modesty *continued*

Specification Information

Step 1.

FT357.

Step 2. Attachment

C	Canvas surface attached

Step 3. Height

A42	42″ high/9″ below surface
A46	46″ high/ 9″ below surface
A53	53″ high/ 9″ below surface

Step 4. Width

40	39½″ wide
42	42″ wide
46	45½″ wide
48	48″ wide
52	51½″ wide
54	54″ wide
60	60″ wide
66	66″ wide
72	72″ wide

Step 5. Surface Material

For 39½″ wide (40), 42″ wide (42), 45½″ wide (46), or 48″ wide (48)

R	tackable fabric, horizontal
T	tackable fabric

For 51½″ wide (52), 54″ wide (54), 60″ wide (60), 66″ wide (66), or 72″ wide (72)

R	tackable fabric, horizontal

Prices for Steps 1-5.

			40R	40T	42R	42T	46R	46T
FT357.	**C**	**A42**	$869	869	908	908	945	945
		A46	$1043	1043	1113	1113	1117	1117
		A53	$1245	1245	1274	1274	1280	1280

			48R	48T	52R	54R	60R	66R
FT357.	**C**	**A42**	$959	959	1004	1009	1110	1139
		A46	$1128	1128	1170	1224	1241	1276
		A53	$1292	1292	1298	1307	1327	1438

			72R
FT357.	**C**	**A42**	$1218
		A46	$1319
		A53	$1486

Step 6. Cable Trough

NC	no cable way	+$0
CW	cable way	+$25

Step 7. Cable Trough Finish

G1	graphite (CP)	+$0

Step 8. Bracket Finish

G1	graphite (CP)	+$0

Step 9. Fabric

For 39½″ wide (40), 42″ wide (42), 45½″ wide (46), or 48″ wide (48)

Price Category B	+$151
Price Category 1	+$0
Price Category 2	+$43
Price Category 3	+$103
Price Category 4	+$180
Price Category 5	+$260
Price Category C	+$356
Price Category E	+$539

For 51½″ wide (52), 54″ wide (54), 60″ wide (60), 66″ wide (66), or 72″ wide (72)

Price Category B	+$262
Price Category 1	+$0
Price Category 2	+$62
Price Category 3	+$148
Price Category 4	+$257
Price Category 5	+$380
Price Category C	+$515
Price Category E	+$778

Surface-Attached Screen, Flat Edge Y1118.

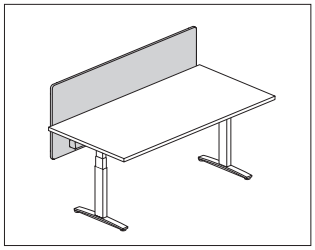

Product Information

Description

This surface-attached tackable screen attaches to an individual table, desk, or work surface. It has a frameless all-fabric design with a flat edge, and comes in privacy and modesty sizes. Attachment hardware included.

Notes

Privacy and modesty panel actual width is 2″ less than specified width.

Privacy screen (A) top edge is 13″ above top of work surface; bottom edge is 3¾″ below work surface.

Privacy & modesty screen (B) top edge is 13″ above top of work surface; bottom edge is 10″ below work surface.

Privacy screen (A) top edge aligns with the 42″ high Canvas datum line; bottom edge is 4″ below work surface.

Privacy & modesty screen (B) top edge aligns with the 42″ high Canvas datum line; bottom edge is 9″ below work surface.

Privacy screen (C) top edge aligns with the 46″ high Canvas datum line; bottom edge is 4″ below work surface.

Privacy & modesty screen (D) top edge aligns with the 46″ high Canvas datum line; bottom edge is 9″ below work surface.

Privacy screen (E) top edge aligns with the 53″ high Canvas datum line; bottom edge is 4″ below work surface.

Privacy & modesty screen (F) top edge aligns with the 53″ high Canvas datum line; bottom edge is 9″ below work surface.

Screens 54″ wide and wider include an additional 1″-wide center mounting bracket.

Recommended mounting creates a 1″ gap between back edge of surface and the screen to accommodate cable routing and the attachment or clamp-mounting of other hardware to the surface.

Optional cable management trough is only available when specifying privacy & modesty height option (B). Trough finish is graphite.

Attachment brackets are inset from edge of screen by approximately 8″ and require 2½″ of work surface for attachment.

Attachment bracket finish is painted graphite.

Screen accepts Customer's Own Material (COM). Yardage is estimated for nondirectional 54″-wide fabrics.

For vertical fabric direction (T):

Height—Yardage

A—1.51
B—1.89
C—1.76
D—2.14
E—2.21
F—2.58

For horizontal fabric direction (R):

Width—Yardage

For heights A/B:

24—0.88
30—1.07
36—1.26
42—1.45
48—1.64
54—1.83
60—2.02
66—2.21
72—2.39

For heights C/D/E/F:

24—1.76
30—2.14
36—2.52
42—2.90
48—3.28
54—3.65
60—4.03
66—4.41
72—4.79

For information on multiple quantities or directional fabrics, contact COM Department. See Order Information in Appendices.

MicrobeCare™ is an antimicrobial coating applied to the fabric surface of this product.

MicrobeCare™ protects products from mold, mildew, algae, and bacteria that cause deterioration, discoloration, odors, and stains.

MicrobeCare™ is registered with the US Environmental Protection Agency (EPA).

Dimensions

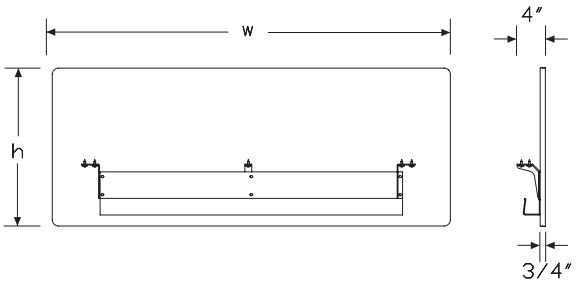

Specification Information

Step 1.

Y1118. A

Step 2. Height

A	privacy (42″ high) A
B	privacy & modesty (42″ high/ 9″ below surface) A
C	privacy (46″ high) A
D	privacy & modesty (46″ high/ 9″ below surface) A
E	privacy (53″ high) A
F	privacy & modesty (53″ high/ 9″ below surface) A

Step 3. Width

24	24″ wide A
30	30″ wide A
36	36″ wide A
42	42″ wide A
48	48″ wide A
54	54″ wide A
60	60″ wide A
66	66″ wide A
72	72″ wide A

Step 4. Surface Material

For 24″ wide (24), 30″ wide (30), 36″ wide (36), 42″ wide (42), or 48″ wide (48)

R	tackable fabric, horizontal A
T	tackable fabric A
D	tackable fabric, horizontal with MicrobeCare™ A
E	tackable fabric with MicrobeCare™ A

For 54″ wide (54), 60″ wide (60), 66″ wide (66), or 72″ wide (72)

R	tackable fabric, horizontal A
D	tackable fabric, horizontal with MicrobeCare™ A

Prices for Steps 1-4.

			R	T	D	E
Y1118.	**A**	**24**	$387	387	455	455
		30	$418	418	486	486
		36	$498	498	567	567
		42	$536	536	604	604
		48	$574	574	641	641
		54	$610	—	677	—
		60	$662	—	730	—
		66	$693	—	761	—
		72	$738	—	806	—
	B	**24**	$482	482	548	548
		30	$519	519	588	588
		36	$556	556	625	625
		42	$595	595	663	663
		48	$626	626	695	695
		54	$660	—	727	—
		60	$682	—	750	—
		66	$744	—	813	—
		72	$800	—	868	—
	C	**24**	$483	483	551	551
		30	$532	532	600	600
		36	$572	572	640	640
		42	$630	630	698	698
		48	$706	706	773	773
		54	$743	—	812	—
		60	$831	—	899	—
		66	$874	—	941	—
		72	$937	—	1005	—
	D	**24**	$606	606	675	675
		30	$676	676	744	744
		36	$754	754	821	821
		42	$771	771	840	840
		48	$803	803	872	872
		54	$826	—	892	—
		60	$914	—	982	—
		66	$988	—	1057	—
		72	$1029	—	1097	—
	E	**24**	$658	658	725	725
		30	$667	667	735	735
		36	$685	685	753	753
		42	$805	805	874	874
		48	$833	833	902	902
		54	$854	—	922	—
		60	$892	—	960	—
		66	$973	—	1042	—
		72	$1036	—	1104	—
	F	**24**	$796	796	864	864
		30	$805	805	874	874
		36	$819	819	887	887
		42	$833	833	902	902
		48	$844	844	913	913
		54	$855	—	923	—
		60	$946	—	1014	—
		66	$994	—	1063	—
		72	$1201	—	1269	—

Step 5. Cable Trough		
For privacy & modesty (42" high/ 9" below surface) (B), privacy & modesty (46" high/ 9" below surface) (D), or privacy & modesty (53" high/ 9" below surface) (F)		
NC	no cable way A	+$0
CW	cable way A	+$25

Step 6. Fabric	
Price Category 1	+$0
Price Category 2	+$25
Price Category 3	+$59
Price Category 4	+$112
Price Category 5	+$146
Price Category B	+$97
Price Category C	+$133
Price Category E	+$182

For tackable fabric, horizontal (R) or tackable fabric, horizontal with MicrobeCare™ (D)	
Price Category 1	+$0
Price Category 2	+$25
Price Category 3	+$59
Price Category 4	+$112
Price Category 5	+$146
Price Category B	+$97
Price Category C	+$133

Flat Edge Screen, Delineation FT358.

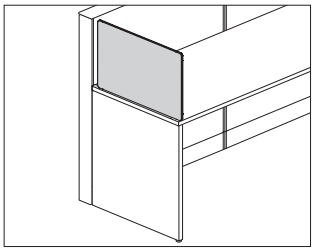

Product Information

Description

This tackable fabric screen attaches to a work surface at the right or left edge to provide division and boundary between workers. It attaches with no interference from supports below the work surface. Attachment hardware included.

Notes

Screen height is 13½″ or 17½″ above work surface, aligning with bead heights of 41″ and 45″.

Screen width matches work surface depths that have a 1″ gap at the back edge.

2 attachment methods ship with the end-of-run right handed (CR) and end-of-run left handed (CL) screen. The screen can be installed using the bracket, or using threaded screws that drill bayonets directly into the surface. See planning guide for exact location of holes.

End-of-run screen does not work on Canvas Beam.

See planning guide for applications and other compatible product lines.

Screen accepts Customer's Own Material (COM). Yardage is estimated for nondirectional 54″-wide fabrics.

For vertical fabric direction (T):

Height—Yardage

42—1.19

46—1.45

For horizontal fabric direction (R):

Width—Yardage

24—0.90

30—1.10

36—1.30

For information on multiple quantities or directional fabrics, contact COM Department. See Order Information in Appendices.

Dimensions

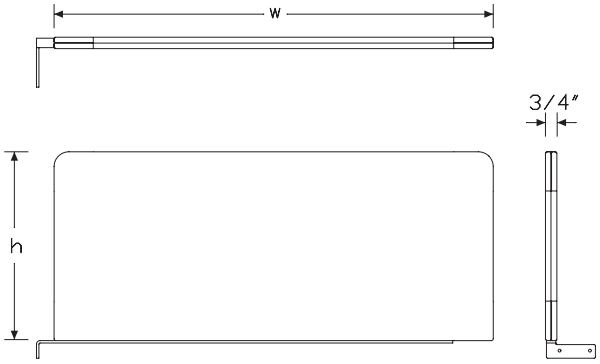

Flat Edge Screen, Delineation

continued

Specification Information

Step 1.

FT358.

Step 2. Attachment Type

CL	Canvas Surface Attached, End of Run Left Handed
CR	Canvas Surface Attached, End of Run Right Handed

Step 3. Height

42	42″ high
46	46″ high

Step 4. Width

24	24″ wide
30	30″ wide
36	36″ wide

Step 5. Surface Material

R	tackable fabric, horizontal
T	tackable fabric

Prices for Steps 1-5.

			24R	24T	30R	30T	36R	36T
FT358.	**CL**	**42**	$706	706	746	746	761	761
		46	$768	768	813	813	841	841
	CR	**42**	$706	706	746	746	761	761
		46	$768	768	813	813	841	841

Step 6. Bracket Finish

UBK	ultra black (CP)	+$0
8Q	folkstone grey (CP)	+$0
91	white (CP)	+$0
98	studio white (CP)	+$0
BK	black	+$0
G1	graphite (CP)	+$0
SNA	satin aluminum	+$10
SNB	satin bronze	+$10
SNC	satin carbon	+$10
WL	warm stone (CP)	+$0
WN	warm grey neutral	+$0

Step 7. Fabric

Price Category 1	+$0
Price Category 2	+$20
Price Category 3	+$48
Price Category 4	+$84
Price Category 5	+$140
Price Category B	+$68
Price Category C	+$122
Price Category E	+$203

Flat Edge Screen, Storage Attached FV361.

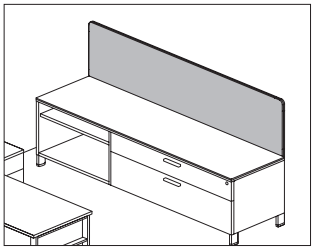

Product Information

Description

This tackable fabric screen attaches to a Canvas low credenza using the thin top and provides boundary with a tackable surface. Attachment hardware included.

Notes

Order credenza thin top separately:

- Credenza top for wood credenza (FF889.)
- Credenza top for metal credenza (FM889.)

Predrilled holes near back edge of credenza thin top allow for bayonets to extend up to support the screen.

Works with standard and powered Canvas credenzas.

Screen accepts Customer's Own Material (COM). Yardage is estimated for nondirectional 54″-wide fabrics.

For vertical fabric direction (T):

Height—Yardage

24—0.95

30—1.14

36—1.32

For horizontal fabric direction (R), for 42″ high:

Width—Yardage

24—0.95

30—1.14

36—1.32

42—1.51

48—1.71

60—2.07

66—2.27

72—2.46

For horizontal fabric direction (R), for 46″ high and 53″ high:

Width—Yardage

24—1.90

30—2.27

36—2.66

42—3.02

48—3.41

60—4.17

66—4.54

72—4.92

For information on multiple quantities or directional fabrics, contact COM Department. See Order Information in Appendices.

Dimensions

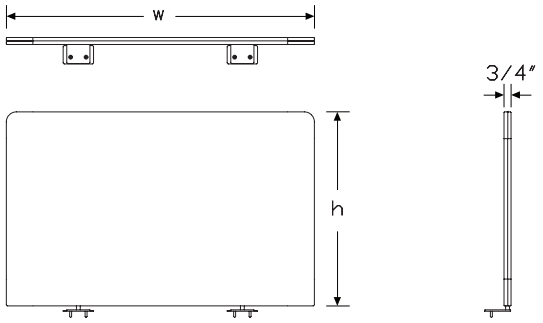

Flat Edge Screen, Storage Attached

continued

Specification Information

Step 1.

FV361.

Step 2. Attachment

CB	Canvas credenza attached, back to back
CS	Canvas credenza attached, single

Step 3. Height

42	42″ high
46	46″ high
53	53″ high

Step 4. Width

30	30″ wide
36	36″ wide
42	42″ wide
48	48″ wide
60	60″ wide
66	66″ wide
72	72″ wide

Step 5. Surface Material

For 30″ wide (30), 36″ wide (36), 42″ wide (42), or 48″ wide (48)

R	tackable fabric, horizontal
T	tackable fabric

For 60″ wide (60), 66″ wide (66), or 72″ wide (72)

R	tackable fabric, horizontal

Prices for Steps 1-5.

			30R	30T	36R	36T	42R	42T
FV361.	**CB**	**42**	$981	981	1061	1061	1138	1138
		46	$1023	1023	1191	1191	1270	1270
		53	$1221	1221	1323	1323	1553	1553
	CS	**42**	$981	981	1061	1061	1138	1138
		46	$1023	1023	1191	1191	1270	1270
		53	$1221	1221	1323	1323	1553	1553

			48R	48T	60R	66R	72R
FV361.	**CB**	**42**	$1218	1218	1295	1376	1454
		46	$1283	1283	1361	1508	1585
		53	$1585	1585	1624	1768	1849
	CS	**42**	$1218	1218	1295	1376	1454
		46	$1283	1283	1361	1508	1585
		53	$1585	1585	1624	1768	1849

Step 6. Fabric

For 30″ wide (30), 36″ wide (36), 42″ wide (42), or 48″ wide (48)

Price Category B	+$113
Price Category 1	+$0
Price Category 2	+$37
Price Category 3	+$89
Price Category 4	+$152
Price Category 5	+$276
Price Category C	+$155
Price Category E	+$264

For 60″ wide (60), 66″ wide (66), or 72″ wide (72)

Price Category B	+$188
Price Category 1	+$0
Price Category 2	+$46
Price Category 3	+$108
Price Category 5	+$221
Price Category C	+$205
Price Category E	+$314

Marker Board, Screen Attached, Acrylic

FD126.

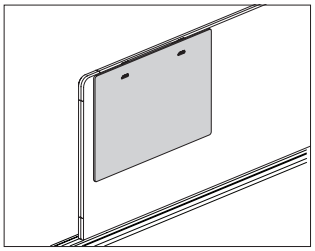

Product Information

Description

This acrylic marker board hangs on an existing screen with a bracket optimized for Pari or flat-edge screens. Marker board can be removed from the bracket for portability.

Notes

Order fabric screen separately.

Marker board hangs on the top edge of the fabric screen.

Marker board is not magnetic.

Marker board does not have trim.

Dimensions

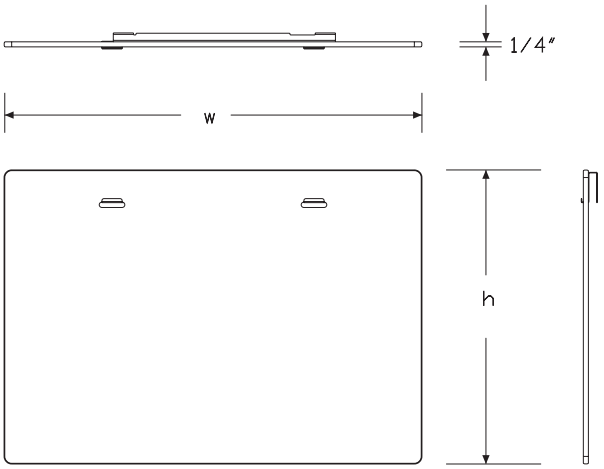

Specification Information

Step 1.

FD126. A

Step 2. Type

F	flat edge screen profile
P	Pari screen profile

Step 3. Height

15	15″ high

Step 4. Width

24	24″ wide
30	30″ wide

Prices for Steps 1-4.

			24	**30**
FD126.	**F**	**15**	$654	704
	P	**15**	$654	704

Step 5. Bracket Finish

611	beige mist metallic (CP) A	+$0
613	silver (CP) A	+$0
EH	metallic bronze	+$0
SNA	satin aluminum	+$10
SNB	satin bronze	+$10
SNC	satin carbon	+$10
8Q	folkstone grey (CP)	+$0
91	white (CP)	+$0
98	studio white (CP)	+$0
CL	cool grey neutral	+$0
G1	graphite (CP)	+$0
WL	warm stone (CP)	+$0
WN	warm grey neutral	+$0

Metal Marker Board, Fabric Screen Attached Y1123.

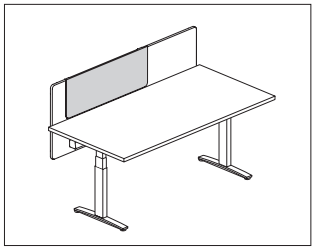

Product Information

Description

This magnetic metal board overlays an existing Pari™ or flat-edge fabric screen. It has a frameless, all-metal design with a straight edge. It accepts magnets and can be dry-erase marker writable when specified as a marker board.

Notes

Order Pari or flat edge profile fabric screen separately.

Metal board hangs on top edge of Pari or flat edge fabric screen.

When specifying marker board (Y1123.M) option, the marker board is an included applique magnetically applied in the field.

Board with tray (Y1123.xxxxxT) option comes with an angled ¾″ lip at bottom of board.

For optimal use, pair with dark fabric screens.

Order the following accessories separately:

- Magnetic document clip (YT400.)
- Magnetic name tag (YT410.05M)
- Pari screen, height adjustable table (Y1116.)
- Surface attached screen, flat edge (Y1118.)

Dimensions

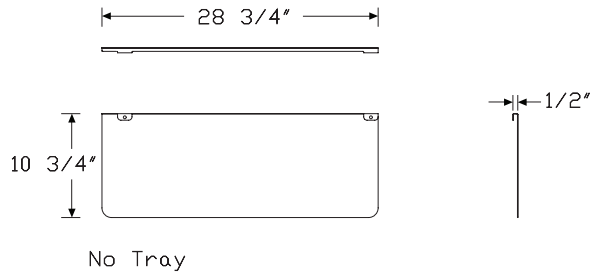

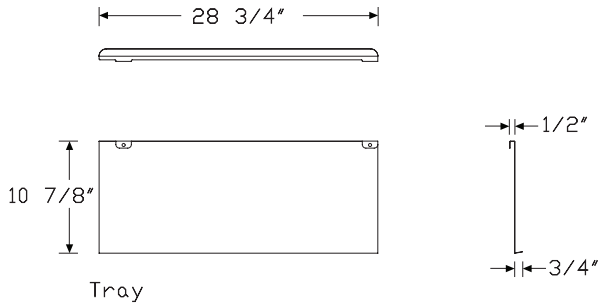

Specification Information

Step 1.

Y1123. A

Step 2. Type

P	painted metal	A
M	marker board	A

Step 3. Height

11	11″ high	A

Step 4. Width

24	24″ wide	A
30	30″ wide	A

Step 5. Tray

N	no tray	A
T	tray	A

Prices for Steps 1-5.

			24N	24T	30N	30T
Y1123.	**P**	**11**	$176	176	188	188
	M	**11**	$246	246	273	273

Step 6. Finish

Metallic Paint

611	beige mist metallic (CP)	A	+$0
613	silver (CP)	A	+$0
SNB	satin bronze	A	+$10

Sand Texture Paint

91	white (CP)	A	+$0
G1	graphite (CP)	A	+$0
UBK	ultra black (CP)	A	+$0

Laminate Screen, Dock Mounted FD120.

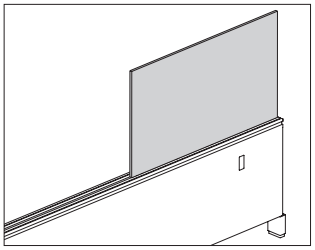

Product Information

Description

This laminate screen attaches anywhere along the top rail of the 22″-high Canvas dock to extend the overall height and to provide boundary. Attachment hardware included.

Dimensions

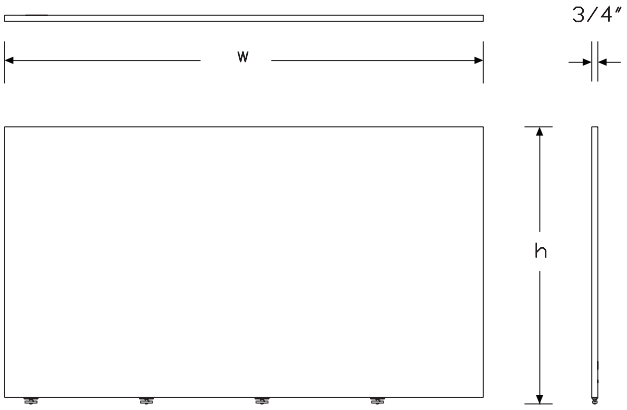

Specification Information

Step 1.

FD120. A

Step 2. Height

20	20″ high (to reach datum of 42″H)
24	24″ high (to reach datum of 46″H)
31	31″ high (to reach datum of 53″H)
35	35″ high (to reach datum of 57″H)

Step 3. Width

24	24″ wide
36	36″ wide
42	42″ wide
48	48″ wide
60	60″ wide
72	72″ wide

Step 4. Surface Material

L	high-pressure laminate/thermoplastic edge A
U	high-pressure laminate/universal edge A

Prices for Steps 1-4.

			L	U
FD120.	**20**	**24**	$648	648
		36	$738	738
		42	$826	826
		48	$915	915
		60	$1002	1002
		72	$1077	1077
	24	**24**	$715	715
		36	$806	806
		42	$894	894
		48	$983	983
		60	$1069	1069
		72	$1146	1146
	31	**24**	$988	988
		36	$1076	1076
		42	$1166	1166
		48	$1253	1253
		60	$1344	1344
		72	$1420	1420

35	**24**	$1125	1125
	36	$1213	1213
	42	$1302	1302
	48	$1389	1389
	60	$1479	1479
	72	$1556	1556

Step 5. Grain Direction

For 24″ wide (24), 36″ wide (36), 42″ wide (42), 48″ wide (48), or 60″ wide (60)

HRG	horizontal grain	+$0
VTG	vertical grain	+$0

For 72″ wide (72)

HRG	horizontal grain	+$0

Step 6. Surface Finish

76	light brown walnut	+$0
8Q	folkstone grey (CP)	+$0
91	white (CP)	+$0
98	studio white (CP)	+$0
CL	cool grey neutral	+$0
HP	light anigre	+$0
LBA	clear on ash (CP)	+$0
LBB	oak on ash (CP)	+$0
LBC	walnut on ash (CP)	+$0
LBF	neutral twill	+$0
LBJ	graphite twill	+$0
LBQ	white twill	+$0
LBR	phantom ecru	+$0
LBS	phantom cocoa	+$0
LBU	medium matte walnut (CP)	+$0
LBV	warm grey teak	+$0
LU	soft white	+$0
WL	warm stone (CP)	+$0
WN	warm grey neutral	+$0
125	natural maple (CP) A	+$0
126	natural cherry (CP) A	+$0
127	walnut (CP) A	+$0
139	light ash (CP) A	+$0
140	warm ash (CP) A	+$0
HF	inner tone light A	+$0
LT	light tone A	+$0
ZZ	open line high-pressure laminate (nonstandard) A	+$200

Step 7. Edge Finish

For high-pressure laminate/thermoplastic edge (L)

76	light brown walnut	+$0
8Q	folkstone grey (CP)	+$0
91	white (CP)	+$0
98	studio white (CP)	+$0
CL	cool grey neutral	+$0
HF	inner tone light	+$0
HP	light anigre	+$0
LBA	clear on ash (CP)	+$0
LBB	oak on ash (CP)	+$0
LBC	walnut on ash (CP)	+$0
LBF	neutral twill	+$0
LBJ	graphite twill	+$0
LBQ	white twill	+$0
LBR	phantom ecru	+$0
LBS	phantom cocoa	+$0
LBU	medium matte walnut (CP)	+$0
LBV	warm grey teak	+$0
LU	soft white	+$0
UBK	ultra black (CP) A	+$0
WL	warm stone (CP)	+$0
WN	warm grey neutral	+$0

For high-pressure laminate/thermoplastic edge (L)

125	natural maple (CP) A	+$0
126	natural cherry (CP) A	+$0
127	walnut (CP) A	+$0
139	light ash (CP) A	+$0
140	warm ash (CP) A	+$0
LT	light tone A	+$0
SG	slate grey A	+$0
X1	chalk white A	+$0

For high-pressure laminate/universal edge (U)

PLY	plywood edge	+$50

Laminate Screen, Surface Attached FT360.

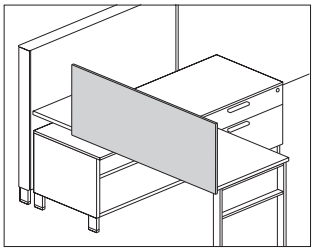

Product Information

Description

This laminate screen attaches to a Canvas work surface to provide boundary. Attachment hardware included.

Notes

Screen widths are actual dimensions; screens extend to the ends of Canvas work surfaces.

Screen extends 4″ below surface to hide attachment hardware.

Screen can be flush with back edge of surface, or provide a 1″ gap.

Screens 48″ wide and wider include an additional 1″-wide center mounting bracket.

Dimensions

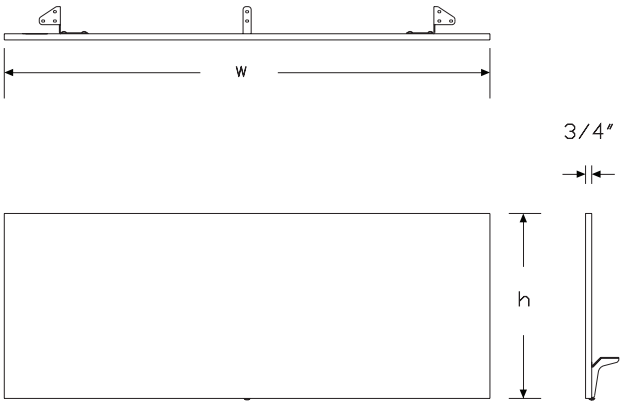

Specification Information

Step 1.

FT360.

Step 2. Attachment

C	Canvas surface attached

Step 3. Height

42	42″ high
46	46″ high

Step 4. Width

39A	39½″ wide
42	42″ wide
45A	45½″ wide
48	48″ wide
51A	51½″ wide
54	54″ wide
60	60″ wide
66	66″ wide
72	72″ wide

Step 5. Surface Material

L	thermally-fused laminate
U	thermally-fused laminate/universal edge

Prices for Steps 1-5.

			39AL	39AU	42L	42U	45AL	45AU
FT360.	**C**	**42**	$495	495	505	505	519	519
		46	$610	610	623	623	634	634

			48L	48U	51AL	51AU	54L	54U
FT360.	**C**	**42**	$532	532	546	546	557	557
		46	$648	648	660	660	674	674

			60L	60U	66L	66U	72L	72U
FT360.	**C**	**42**	$570	570	617	617	649	649
		46	$684	684	739	739	769	769

Step 6. Grain Direction

For 39½″ wide (39A), 42″ wide (42), 45½″ wide (45A), 48″ wide (48), 51½″ wide (51A), 54″ wide (54), or 60″ wide (60)

VTG	vertical grain	+$0
HRG	horizontal grain	+$0

For 66″ wide (66) or 72″ wide (72)		
HRG	horizontal grain	+$0

Step 7. Bracket Finish		
G1	graphite (CP)	+$0

Step 8. Surface Finish		
125	natural maple (CP)	+$0
126	natural cherry (CP)	+$0
127	walnut (CP)	+$0
139	light ash (CP)	+$0
140	warm ash (CP)	+$0
76	light brown walnut	+$0
8Q	folkstone grey (CP)	+$0
91	white (CP)	+$0
98	studio white (CP)	+$0
CL	cool grey neutral	+$0
HP	light anigre	+$0
LBA	clear on ash (CP)	+$0
LBB	oak on ash (CP)	+$0
LBC	walnut on ash (CP)	+$0
LBF	neutral twill	+$0
LBJ	graphite twill	+$0
LBQ	white twill	+$0
LBR	phantom ecru	+$0
LBS	phantom cocoa	+$0
LBU	medium matte walnut (CP)	+$0
LBV	warm grey teak	+$0
LU	soft white	+$0
WL	warm stone (CP)	+$0
WN	warm grey neutral	+$0

Step 9. Edge Finish		
For thermally-fused laminate (L)		
125	natural maple (CP)	+$0
126	natural cherry (CP)	+$0
127	walnut (CP)	+$0
139	light ash (CP)	+$0
140	warm ash (CP)	+$0
UBK	ultra black (CP)	+$0
76	light brown walnut	+$0
8Q	folkstone grey (CP)	+$0
91	white (CP)	+$0
98	studio white (CP)	+$0
CL	cool grey neutral	+$0
HF	inner tone light	+$0
HP	light anigre	+$0
LBA	clear on ash (CP)	+$0
LBR	phantom ecru	+$0
LBS	phantom cocoa	+$0
LBU	medium matte walnut (CP)	+$0
LBV	warm grey teak	+$0
LBB	oak on ash (CP)	+$0
LBC	walnut on ash (CP)	+$0
LBF	neutral twill	+$0
LBJ	graphite twill	+$0
LBQ	white twill	+$0
LU	soft white	+$0
WL	warm stone (CP)	+$0
WN	warm grey neutral	+$0
For thermally-fused laminate/universal edge (U)		
PLY	plywood edge	+$50

Laminate Screen, Surface Attached with Modesty FT361.

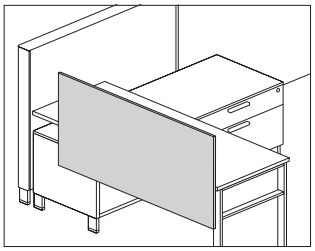

Product Information

Description

This laminate screen attaches to a Canvas work surface to provide boundary and modesty. An optional cable management trough is available. Trough finish is graphite. Attachment hardware included.

Notes

Screen widths are actual dimensions; screens extend to the ends of Canvas work surfaces.

Screen extends 9″ below surface for modesty.

Screen can be flush with back edge of surface, or provide a 1″ gap.

Screens 48″ wide and wider include an additional 1″-wide center mounting bracket.

Dimensions

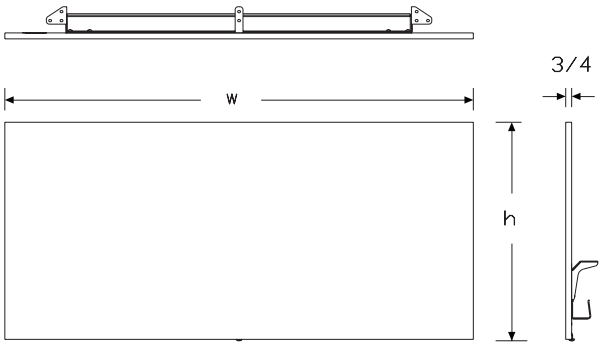

Specification Information

Step 1.

FT361.

Step 2. Attachment

C Canvas surface attached

Step 3. Height

A42 42″ high/9″ below surface

A46 46″ high/ 9″ below surface

Step 4. Width

39A 39½″ wide

42 42″ wide

45A 45½″ wide

48 48″ wide

51A 51½″ wide

54 54″ wide

60 60″ wide

66 66″ wide

72 72″ wide

Step 5. Surface Material

L thermally-fused laminate

U thermally-fused laminate/universal edge

Prices for Steps 1-5.

			39AL	39AU	42L	42U	45AL	45AU
FT361.	**C**	**A42**	$534	534	549	549	562	562
		A46	$661	661	677	677	690	690

			48L	48U	51AL	51AU	54L	54U
FT361.	**C**	**A42**	$577	577	589	589	603	603
		A46	$703	703	715	715	729	729

			60L	60U	66L	66U	72L	72U
FT361.	**C**	**A42**	$616	616	662	662	692	692
		A46	$743	743	793	793	820	820

Step 6. Grain Direction

For 39½″ wide (39A), 42″ wide (42), 45½″ wide (45A), 48″ wide (48), 51½″ wide (51A), 54″ wide (54), or 60″ wide (60)

VTG	vertical grain	+$0
HRG	horizontal grain	+$0

For 66″ wide (66) or 72″ wide (72)

HRG	horizontal grain	+$0

Step 7. Cable Way

CW	cable way	+$25
NC	no cable way	+$0

Step 8. Cable Way Finish

For cable way (CW)

G1	graphite (CP)	+$0

Step 9. Bracket Finish

G1	graphite (CP)	+$0

Step 10. Surface Finish

125	natural maple (CP)	+$0
126	natural cherry (CP)	+$0
127	walnut (CP)	+$0
139	light ash (CP)	+$0
140	warm ash (CP)	+$0
76	light brown walnut	+$0
8Q	folkstone grey (CP)	+$0
91	white (CP)	+$0
98	studio white (CP)	+$0
CL	cool grey neutral	+$0
HP	light anigre	+$0
LBA	clear on ash (CP)	+$0
LBB	oak on ash (CP)	+$0
LBC	walnut on ash (CP)	+$0
LBF	neutral twill	+$0
LBJ	graphite twill	+$0
LBQ	white twill	+$0
LBR	phantom ecru	+$0
LBS	phantom cocoa	+$0
LBU	medium matte walnut (CP)	+$0
LBV	warm grey teak	+$0
LU	soft white	+$0
WL	warm stone (CP)	+$0
WN	warm grey neutral	+$0

Step 11. Edge Finish

For thermally-fused laminate (L)

125	natural maple (CP)	+$0
126	natural cherry (CP)	+$0
127	walnut (CP)	+$0
139	light ash (CP)	+$0
140	warm ash (CP)	+$0
UBK	ultra black (CP)	+$0
76	light brown walnut	+$0
8Q	folkstone grey (CP)	+$0
91	white (CP)	+$0
98	studio white (CP)	+$0
CL	cool grey neutral	+$0
HF	inner tone light	+$0
HP	light anigre	+$0
LBA	clear on ash (CP)	+$0
LBR	phantom ecru	+$0
LBS	phantom cocoa	+$0
LBU	medium matte walnut (CP)	+$0
LBV	warm grey teak	+$0
LBB	oak on ash (CP)	+$0
LBC	walnut on ash (CP)	+$0
LBF	neutral twill	+$0
LBJ	graphite twill	+$0
LBQ	white twill	+$0
LU	soft white	+$0
WL	warm stone (CP)	+$0
WN	warm grey neutral	+$0

For thermally-fused laminate/universal edge (U)

PLY	plywood edge	+$50

Laminate Screen, Surface Attached Y1120.

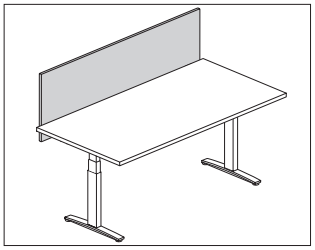

Product Information

Description

This screen attaches to an individual height adjustable work surface. It has a laminate surface with frameless design and comes in privacy and modesty sizes. Attachment hardware included.

Notes

Privacy and modesty panel actual width is 2″ less than specified width.

Privacy screen (13A) top edge aligns with the 42″-high Canvas datum line; bottom edge is 4″ below work surface.

Privacy & modesty screen (13B) top edge aligns with the 42″-high Canvas datum line; bottom edge is 11⅛″ below work surface.

Screens 54″ wide and wider include an additional 1″-wide center mounting bracket.

Recommended mounting creates a 1″ gap between back edge of surface and the screen to accommodate cable routing and the attachment or clamp-mounting of other hardware to the surface.

Optional cable management trough is only available when specifying privacy & modesty height option (13B). Trough finish is graphite.

Attachment brackets are inset from edge of screen by approximately 8″ and require 2½″ of work surface for attachment.

Attachment bracket finish is painted graphite.

Dimensions

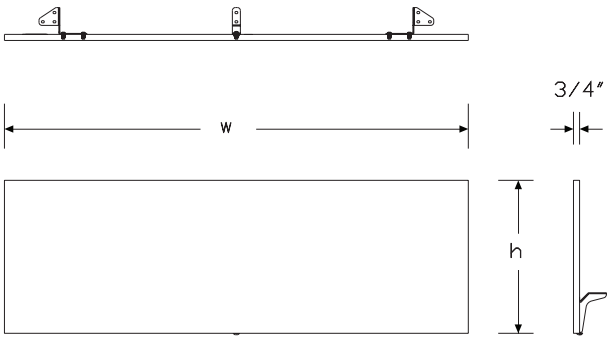

Specification Information

Step 1.

Y1120.

Step 2. Height

13A	privacy (13½″ above worksurface)
13B	privacy & modesty (13½″ above worksurface/11⅛″ below worksurface)

Step 3. Width

24	24″ wide
30	30″ wide
36	36″ wide
42	42″ wide
48	48″ wide
54	54″ wide
60	60″ wide
66	66″ wide
72	72″ wide

Step 4. Surface Material

L	thermally-fused laminate
U	thermally-fused laminate/universal edge

Prices for Steps 1-4.

			L	U
Y1120.	**13A**	**24**	$264	264
		30	$281	281
		36	$295	295
		42	$309	309
		48	$324	324
		54	$337	337
		60	$348	348
		66	$359	359
		72	$373	373
	13B	**24**	$326	326
		30	$343	343
		36	$361	361
		42	$380	380
		48	$398	398
		54	$412	412
		60	$430	430
		66	$442	442
		72	$457	457

Step 5. Grain Direction

For 24″ wide (24), 30″ wide (30), 36″ wide (36), 42″ wide (42), 48″ wide (48), 54″ wide (54), or 60″ wide (60)

VTG	vertical grain	+$0
HRG	horizontal grain	+$0

For 66″ wide (66) or 72″ wide (72)

HRG	horizontal grain	+$0

Step 6. Cable Trough

For privacy (13½″ above worksurface) (13A)

NC	no cable way	+$0

For privacy & modesty (13½″ above worksurface/11⅛″ below worksurface) (13B)

NC	no cable way	+$0
CW	cable way	+$25

Step 7. Surface Finish

125	natural maple (CP)	+$0
126	natural cherry (CP)	+$0
127	walnut (CP)	+$0
139	light ash (CP)	+$0
140	warm ash (CP)	+$0
76	light brown walnut	+$0
8Q	folkstone grey (CP)	+$0
91	white (CP)	+$0
98	studio white (CP)	+$0
CL	cool grey neutral	+$0
HP	light anigre	+$0
LBA	clear on ash (CP)	+$0
LBR	phantom ecru	+$0
LBS	phantom cocoa	+$0
LBU	medium matte walnut (CP)	+$0
LBV	warm grey teak	+$0
LBB	oak on ash (CP)	+$0
LBC	walnut on ash (CP)	+$0
LBF	neutral twill	+$0
LBJ	graphite twill	+$0
LBQ	white twill	+$0
LU	soft white	+$0
WL	warm stone (CP)	+$0
WN	warm grey neutral	+$0

Step 8. Edge Finish

For thermally-fused laminate (L)

125	natural maple (CP)	+$0
126	natural cherry (CP)	+$0
127	walnut (CP)	+$0
139	light ash (CP)	+$0
140	warm ash (CP)	+$0
UBK	ultra black (CP)	+$0
76	light brown walnut	+$0
8Q	folkstone grey (CP)	+$0
91	white (CP)	+$0
98	studio white (CP)	+$0
CL	cool grey neutral	+$0
HF	inner tone light	+$0
HP	light anigre	+$0
LBA	clear on ash (CP)	+$0
LBR	phantom ecru	+$0
LBS	phantom cocoa	+$0
LBU	medium matte walnut (CP)	+$0
LBV	warm grey teak	+$0
LBB	oak on ash (CP)	+$0
LBC	walnut on ash (CP)	+$0
LBF	neutral twill	+$0
LBJ	graphite twill	+$0
LBQ	white twill	+$0
LU	soft white	+$0
WL	warm stone (CP)	+$0
WN	warm grey neutral	+$0

For thermally-fused laminate/universal edge (U)

PLY	plywood edge	+$50

Name Tag Clip Y1121.

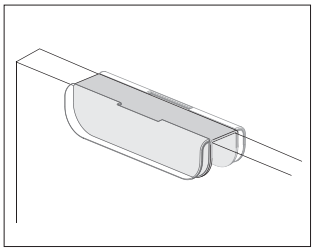

Product Information

Description

This metal name tag clip hangs on surface-attached laminate screens. It can hold 2 or 4 name tags.

Notes

The 2-name-tag clip (2) holds 2 magnetic name tags (YT410.05M) in a back-to-back orientation.

The 4-name-tag clip (4) holds 2 magnetic name tags (YT410.05M) side-by-side on the front side, and 2 side-by-side on the back side.

Name tag clip can hang on any HermanMiller laminate screen.

Order magnetic name tag (YT410.05M) separately.

Order name tag insert for magnetic name tag (O.YT1900) separately through Sales Source.

Dimensions

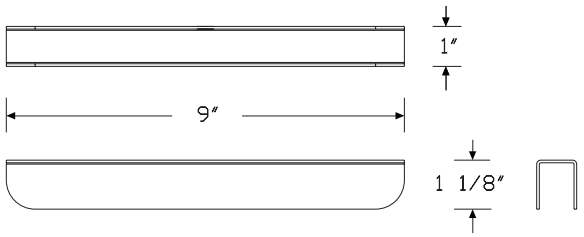

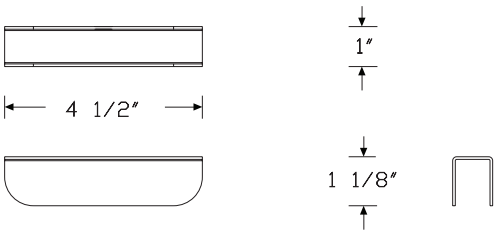

Specification Information

Step 1.

Y1121. A

Step 2. Screen Type

L	thermally-fused laminate A

Step 3. Application

2	2 magnetic name tags A
4	4 magnetic name tags A

Prices for Steps 1-3.

		2	4
Y1121.	**L**	$28	40

Step 4. Screen Finish

91	white (CP) A	+$0
G1	graphite (CP) A	+$0
611	beige mist metallic (CP) A	+$0
613	silver (CP) A	+$0
SNB	satin bronze A	+$10

Metal Board, Screen Attached Y1122.

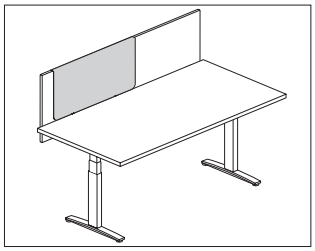

Product Information

Description

This metal board hangs on surface-attached laminate screens. It has a frameless, all-metal design with a straight edge. It accepts magnets and can be dry-erase marker writable when used with the magnetic marker board.

Notes

Metal board can hang on any HermanMiller laminate screen.

Order the following accessories separately:

- Magnetic document clip (YT400.)
- Magnetic name tag (YT410.05M)
- Magnetic marker board (YT450.)

Dimensions

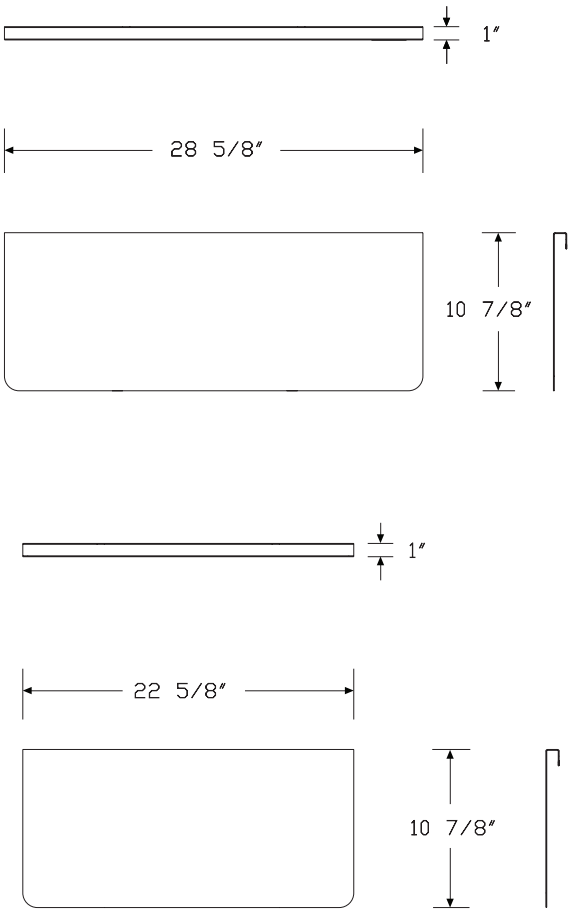

Specification Information

Step 1.

Y1122. A

Step 2. Screen Type

L	thermally-fused laminate A

Step 3. Height

A	11″ high A

Step 4. Width

24	24″ wide A
30	30″ wide A

Prices for Steps 1-4.

		24	**30**
Y1122.	**L A**	$140	153

Step 5. Screen Finish

91	white (CP) A	+$0
G1	graphite (CP) A	+$0
611	beige mist metallic (CP) A	+$0
613	silver (CP) A	+$0
SNB	satin bronze A	+$10

Marker Board Screen, Dock Mounted FD118.

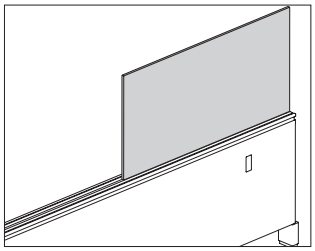

Product Information

Description

This marker board laminate screen attaches anywhere along the top rail of the 22″ high Canvas dock to extend the overall height and to provide boundary with a white, dry-erase marker board face. Attachment hardware included.

Dimensions

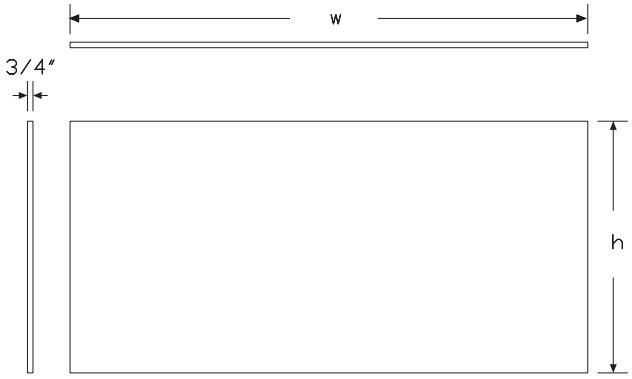

Specification Information

Step 1.

FD118. A

Step 2. Type

M	marker board - non magnetic

Step 3. Height

20	20″ high
24	24″ high
31	31″ high
35	35″ high

Step 4. Width

24	24″ wide
30	30″ wide
36	36″ wide
42	42″ wide
48	48″ wide
60	60″ wide
72	72″ wide

Prices for Steps 1-4.

		24	30	36	42	48	60
FD118. M	**20**	$816	881	951	1088	1222	1357
	24	$881	951	1022	1153	1277	1420
	31	$943	1038	1175	1277	1397	1501
	35	$1119	1197	1277	1371	1469	1563

		72
FD118. M	**20**	$1491
	24	$1547
	31	$1595
	35	$1676

Index by Product Name

Canvas Office Landscape® Dock	
Bracket Hardware, Pari Freestanding Screen/Low Credenza	page(s) 133
Bracket Hardware, Screens to Renew Table	132
Bracket Hardware, Work Surface/Low Storage	130
Cable Clips	42
Cable Management Channel	83
Cable Management Trough	82
Cable Manager	81
Cable Manager - Dock to Surface	45
Ceiling Power Entry	25
Closed Support Leg	74
Column Kit, Dock Peninsula Surface	69
Connection Hardware, Screens	128
Controlled Power Module - Bottom of Dock	35
Controlled Receptacle Decal (12 per sheet)	39
Cord Cleat	84
Data Housing	43
Dock Foot	7
Dock Foot, Structural (Support Foot)	6
Dock Power Harness	26
Dock Structure	5
Dock-to-Dock Connector	8
Dock to Screen Bracket, Screens	131
Dock to Surface Tethers	63
Finished End, Architectural, Dock	11
Fixed Surface Support, Low Credenza, Power Chase	78
Flat Edge Screen, Delineation	144
Flat Edge Screen, Dock Mounted	134
Flat Edge Screen, Stanchion Infill	137
Flat Edge Screen, Storage Attached	146
Flat Edge Screen, Surface Attached with Modesty	139
Gallery Panel, Dock Attached	12
Gallery Panel Return	17
Glass Screen, Dock Mounted	106
Grommet Kit, Surface	86
Half Bridge	48
Individual Bridge	46
Laminate Screen, Dock Mounted	150
Laminate Screen, Surface Attached	152, 156
Laminate Screen, Surface Attached with Modesty	154
Logic G1000 Grommet Mounted Electrical Distributor	40
Lower Cladding	21
Low Storage to Dock Bracket	9
Low Storage to Dock Spacer	10
Marker Board, Screen Attached, Acrylic	148
Marker Board Screen, Dock Mounted	161
Markerboard, Storage Cabinet, Frame Top Mounted	90
Metal Board, Screen Attached	159
Metal Marker Board, Fabric Screen Attached	149
Modesty Panel	100
Name Tag Clip	158
Open Support Leg, Architectural Foot	72
Pari Screen, Delineation	122
Pari Screen, Dock Mounted	108
Pari Screen, Freestanding/Surface Attached	126
Pari Screen, Height Adjustable Tables	119
Pari Screen, Stanchion Infill Fabric	113
Pari Screen, Storage Attached	124
Pari Screen, Surface Attached	115
Pari Screen, Surface Attached with Modesty	117
Perpendicular Upper Storage Stanchion Support	95
Power, Block to Block Jumper	27
Power/Data Module Spacer	44
Power Entry, Internal Direct Connect - Floor	23
Power Entry, New York - Floor Power Entry	24
Power Module - Bottom of Dock	28
Power Module - Bottom of Dock - 20 amp	30
Power Module-Top of Dock	34
Privacy Panel	102
Rectangular Surface	55
Screen	97
Secondary Surface	52
Square Open Support Leg	70
Stanchion Infill, Acrylic	105
Stiffener	80
Storage Cabinet, Dock Mounted, Open	87
Storage Cabinet, Dock Mounted, Sliding Door	91
Storage Support, Perpendicular to Dock	96
Support Leg, Post	68
Surface-Attached Screen, Flat Edge	141
Surface Ganging Bracket	64
Surface Support, Low Credenza, Adjustable Height	77
Surface Support, Low Credenza, Fixed Height	76
Tackboard, Storage Cabinet, Frame Top Mounted	89
Team Bridge	50
Under Surface Controlled Power Module	37
Under Surface Power Module	32
Universal Post Leg	65
Universal Post Leg, Shared	67
Upper Storage Stanchion - Center Mount	93
Upper Storage Stanchion - Offset Mount	94
Vertical Cable Manager	85

Index by Product Number

FD2B2.	Universal Post Leg, Shared	page(s) 67
FD16A.	Finished End, Architectural, Dock	11
FD110.	Dock Structure	5
FD113.	Gallery Panel, Dock Attached	12
FD114.	Glass Screen, Dock Mounted	106
FD115.	Pari Screen, Dock Mounted	108
FD116.	Flat Edge Screen, Dock Mounted	134
FD117.	Dock Foot	7
FD118.	Marker Board Screen, Dock Mounted	161
FD119.	Dock Foot, Structural (Support Foot)	6
FD120.	Laminate Screen, Dock Mounted	150
FD126.	Marker Board, Screen Attached, Acrylic	148
FD128.	Dock-to-Dock Connector	8
FD141.	Power Entry, New York - Floor Power Entry	24
FD142.	Ceiling Power Entry	25
FD144.	Power Entry, Internal Direct Connect - Floor	23
FD150.	Power Module - Bottom of Dock	28
FD150M	Controlled Power Module - Bottom of Dock	35
FD151.	Dock Power Harness	26
FD152.	Under Surface Power Module	32
FD152M	Under Surface Controlled Power Module	37
FD154.	Power, Block to Block Jumper	27
FD156.	Power Module - Bottom of Dock - 20 amp	30
FD158.	Power Module-Top of Dock	34
FD159.	Data Housing	43
FD170.	Lower Cladding	21
FD197.	Power/Data Module Spacer	44
FD198.	Cable Clips	42
FD199.	Cable Manager - Dock to Surface	45
FD210.	Gallery Panel Return	17
FD235.	Column Kit, Dock Peninsula Surface	69
FD290.	Dock to Surface Tethers	63
FD292.	Low Storage to Dock Bracket	9
FD293.	Low Storage to Dock Spacer	10
FD295.	Storage Support, Perpendicular to Dock	96
FD300.	Pari Screen, Freestanding/Surface Attached	126
FD311.	Connection Hardware, Screens	128
FD312.	Bracket Hardware, Work Surface/Low Storage	130
FD313.	Dock to Screen Bracket, Screens	131
FD314.	Bracket Hardware, Screens to Renew Table	132
FD315.	Bracket Hardware, Pari Freestanding Screen/Low Credenza	133
FD415.	Storage Cabinet, Dock Mounted, Open	87
FD416.	Storage Cabinet, Dock Mounted, Sliding Door	91
FD417.	Upper Storage Stanchion - Center Mount	93
FD418.	Perpendicular Upper Storage Stanchion Support	95
FD419.	Upper Storage Stanchion - Offset Mount	94
FD430.	Stanchion Infill, Acrylic	105
FD435.	Pari Screen, Stanchion Infill Fabric	113
FD437.	Flat Edge Screen, Stanchion Infill	137
FDE10.	Secondary Surface	52
FDE15.	Half Bridge	48
FDE16.	Team Bridge	50
FDE17.	Individual Bridge	46
FDS10.	Secondary Surface	52
FDS15.	Half Bridge	48
FDS16.	Team Bridge	50
FDS17.	Individual Bridge	46
FT2B2.	Universal Post Leg	65
FT19C.	Cable Management Channel	83
FT29B.	Surface Ganging Bracket	64
FT199.	Cable Management Trough	82
FT298.	Surface Support, Low Credenza, Fixed Height	76
FT299.	Surface Support, Low Credenza, Adjustable Height	77
FT351.	Pari Screen, Surface Attached	115
FT353.	Pari Screen, Surface Attached with Modesty	117
FT354.	Pari Screen, Delineation	122
FT357.	Flat Edge Screen, Surface Attached with Modesty	139
FT358.	Flat Edge Screen, Delineation	144
FT360.	Laminate Screen, Surface Attached	152
FT361.	Laminate Screen, Surface Attached with Modesty	154
FT491.	Tackboard, Storage Cabinet, Frame Top Mounted	89
FT492.	Markerboard, Storage Cabinet, Frame Top Mounted	90
FTE10.	Rectangular Surface	55
FTS10.		
FTT10.		
FV2A2.	Open Support Leg, Architectural Foot	72
FV2D2.	Square Open Support Leg	70
FV2E2.	Closed Support Leg	74
FV298.	Fixed Surface Support, Low Credenza, Power Chase	78
FV360.	Pari Screen, Storage Attached	124
FV361.	Flat Edge Screen, Storage Attached	146
FV689.	Support Leg, Post	68
FV693.	Privacy Panel	102
FV694.	Screen	97
FV695.	Cable Manager	81
FV696.	Stiffener	80
FV697.	Modesty Panel	100
FV698.	Vertical Cable Manager	85
FV982.	Grommet Kit, Surface	86
G1331.	Cord Cleat	84
G9999.	Controlled Receptacle Decal (12 per sheet)	39
Y1116.	Pari Screen, Height Adjustable Tables	119
Y1118.	Surface-Attached Screen, Flat Edge	141
Y1120.	Laminate Screen, Surface Attached	156

Y1121.	Name Tag Clip	158
Y1122.	Metal Board, Screen Attached	159
Y1123.	Metal Marker Board, Fabric Screen Attached	149
Y1425.	Logic G1000 Grommet Mounted Electrical Distributor	40

20-Day or Less/Assigned Lead-Time Order Information

20-Day or Less and Assigned Lead-Time Programs

20-day or less and assigned lead-time products are designed for established Herman Miller dealers with pre-approved credit.

Products are distributed from multiple manufacturing facilities across the United States. All products and options not designated by an Assigned Lead-Time icon A will ship in 20 business days or less after being acknowledged by Herman Miller. Products and options designated by an A are on the assigned lead-time program and will ship in 20 days, less than 20 days, or more than 20 days from order acknowledgement.

Ordering Procedure

Please place orders through Order Manager. If this is not available to you, place orders through mail or fax. Verbal purchase orders will not be accepted.

Order Entry fax number for Meridian®
Filing and Storage: (616) 846 9236.
Order Entry fax number for all other products:
(616) 654 3085.

For more information, contact your Customer Care representative at: (866) 854 3048 ext 3400.

Shipments and Delivery

Per Herman Miller Terms and Conditions.

Changes and Cancellation

Per Herman Miller Terms and Conditions.

Stain-to-Match Program

Program Overview

The Stain-to-Match program gives you the option of using veneer finishes that are not listed in the standard offering. The program allows Herman Miller to match a customer's existing recut or natural veneer, or create a new finish that is unique to an installation.

Specific information on approval, ordering, pricing, and warranty for the Stain-to-Match program is listed below. Questions and requests for assistance may be directed to Herman Miller Options at:

(800) 654 3910

Stain-to-Match Process

1. Fill out the Options Stain-to-Match Request Form and send along with a color sample (2" x 3" minimum) to the Herman Miller Options Applications Team at the address provided on the form. The form can be found on Omni.
2. Within 7-10 working days, Herman Miller Options will send a sample of the color-matched stain on Herman Miller veneer to the requester for the customer's signed approval.
3. If the sample meets the customer's approval, sign the reverse side of the sample, scan and email the approval to:
   options@hermanmiller.com.
4. After the stain has been approved, a formal quotation with special number and pricing can be provided, or the product can be specified through the Vary Easy program, if available. Work with the Options team on final product needs and how to specify.
5. A purchase order can then be placed.

Stain-to-Match Warranty

Herman Miller warrants its products to be free from defects in craftsmanship from the date of delivery for the applicable warranty period. Herman Miller is responsible for the physical properties of the veneers available through the Stain-to-Match program, which include:

STA: Stain-to-Match on Recut Ash
STC: Stain-to-Match on Cherry
STD: Stain-to-Match on Oak
STK: Stain-to-Match on Reltech Anigre (Geiger)
STP: Stain-to-Match on Maple
STU: Stain-to-Match on Walnut (Geiger)

See your specification tool for product specific finish offering limitations.

Customer's Own Material Order Information — Workspaces

Customer's Own Material

Program Overview

The Customer's Own Material (COM) program gives you the option of using textiles other than those listed. Herman Miller will test textiles for application to Herman Miller products and will process orders for those with approved COM textiles only. COM textiles are on assigned lead times.

Omni lists an overview of fabrics that have been tested and indicates whether or not they were approved for application to Herman Miller products.

Specific information on the terms and conditions, testing, approval, and ordering process for COM is listed below. Questions about the COM program and requests for assistance may be directed to your COM representative at:
(616) 654 3400
(866) 854 3048 ext 6543400

Customer's Own Material Warranty

Herman Miller does not warrant COM textiles. COM textiles are tested for application only; they are not tested for performance. The Herman Miller warranty does apply to the underlying products.

Suppliers of COM textiles are responsible for color consistency within commercial tolerances, UV stability, and resistance to soiling and perspiration.

Customer's Own Material Pricing

COM is a Category 1 fabric. There are no application charges for COM fabrics.

Ordering and payment for COM textile yardage are the responsibility of the customer and the textile supplier.

If desired, Herman Miller will purchase COM textiles directly from Maharam, Camira, C.F. Stinson, Guilford of Maine, Luna Textiles, Momentum Textiles and Ultrafabrics to simplify ordering and shipment. For this service, refer to the Supplier Connection program in Omni.

Application Note

Herman Miller does not guarantee that Customer's Own Material (COM) fabric patterns will align across panels/tiles or from one screen to the next. We also do not guarantee that COM fabric designs will be positioned consistently in the same location across several panels, tiles, or screens.

Textile Approval

1. Select a COM textile and a Herman Miller product.
2. If your textile does not show as tested in Omni, submit a request. You will be required to select a specific color of the textile and feature of the product to test, i.e., seat, back, etc.
3. Herman Miller will notify you of approval or disapproval within 4 days from receipt of the test yardage.

Ordering Products with COM

1. Refer to the specific products to determine the yardage required for COM textiles.
   Note: Yardage requirements are based on nondirectional, 54"-wide textiles. 66"-wide textiles are needed for application on 60"-wide products. Additional yardage may be needed due to the unique characteristics of a textile.
2. Obtain the COM ID# in Omni. If the color you are ordering does not have a COM ID# assigned, click "Create ID".
3. Enter your order on Order Manager in Omni.
4. Upon receipt of your purchase order, Herman Miller will send you a PO acknowledgment.
5. Arrangements must be made for the textiles to be shipped from the supplier to Herman Miller for application to the Herman Miller products. Textiles must be tagged with the assigned identification number and the roll yardage quantity. See Omni for shipping procedures and current shipping addresses or contact a COM representative at (616) 654 3400 or (866) 854 3048 ext 6543400.

   Products will be scheduled for production when COM textiles are received at Herman Miller. Standard lead times in effect at that time will apply.

   Note: If textiles are to be purchased directly by Herman Miller through the Supplier Connection program, Herman Miller will handle the ordering and shipping process and will schedule your order for production upon receipt of your purchase order (dependent on textile availability). Refer to the Supplier Connection program for more information.

Supplier Connection

Program Overview

The Supplier Connection program is a service offered by Herman Miller to purchase approved COM textiles directly from Maharam, Camira, C.F. Stinson, Guilford of Maine, Luna Textiles, Momentum Textiles and Ultrafabrics. When you select a textile through this program, Herman Miller will facilitate the ordering, scheduling, and shipment of the textile directly with the supplier.

Suppliers included in the Supplier Connection program keep an active inventory of textiles that are pre-approved for application to Herman Miller products. Pre-approval applies only to the suitability of a textile for manufacturing and application to a Herman Miller product. Omni provides an overview of fabrics that have been tested and indicates whether or not they were approved for application to Herman Miller products.

Specific information on the terms and conditions, testing, approval, and ordering process for the Supplier Connection program is listed below. Questions and requests for assistance may be directed to your COM representative at:
(616) 654 3400
(866) 854 3048 ext 6543400

Supplier Connection Warranty

Textiles purchased by Herman Miller through the Supplier Connection program are COM and are not warranted by Herman Miller. COM textiles are tested for application only; they are not tested for performance. The Herman Miller warranty does apply to the underlying products.

Suppliers of COM textiles are responsible for color consistency within commercial tolerances, UV stability, and resistance to soiling and perspiration.

Supplier Connection Pricing

Textiles purchased by Herman Miller through the Supplier Connection program are COM. COM is a Category 1 fabric. There are no application charges for COM fabrics.

Payment for textiles purchased by Herman Miller through the Supplier Connection program is the responsibility of the customer or dealer. Herman Miller will invoice the order at a total product cost based on the supplier's price published at the time of the order.

Textile Approval

1. Select a COM textile and a Herman Miller product.
2. If your textile does not show as tested in Omni, submit a request. You will be required to select a specific color of the textile and feature of the product to test, i.e., seat, back, etc.
3. Herman Miller will notify you of approval or disapproval within 4 days from receipt of the test yardage.

Ordering Products with Supplier Connection COM

1. Identify and include the following information on your purchase order:
   - Product number and option
   - Herman Miller's COM identification number
2. Enter your order on Order Manager in Omni.
3. Upon receipt of the purchase order, Herman Miller will process your order and send you a PO acknowledgment. Herman Miller will determine the yardage required to produce your product and will order and schedule for delivery the required textile. Standard lead times in effect at the time the textile is allocated at the supplier will apply to products ordered through this program.

Textiles Application Chart — Workspaces

• *Available*

A *Assigned lead-time textile.*

A *Maharam textiles are on assigned lead times.*

See page 2 for exception notes.

		Action Office® Panels/Connectors	Action Office B-Style Tackboards	Action Office/Ethospace E-Style Storage	Ethospace Tiles/Connectors	Ethospace/Canvas Office Landscape® Privacy Doors	Canvas Tiles/Extended Width Tiles/Channel Tiles	Canvas B-/E-Style Storage	Canvas Tackboards	Canvas Metal Desk Hutch Back Panel	Canvas Vista™ Movable Insert and Display Unit	OE1 Boundary Agile Wall Tile	OE1 Boundary Project Board and Screens	OE1 Floating Screen	OE1 Nook Liner/Felt Screen Liner/Storage Trolley Liner	Overlay™ Performance Wall Cladding	Pari™ Screens/Flat Edge Screens/Channel Screens	Passport Work Table Screen	Renew™ Link Screens	Ambit™ Workspace Solutions Screen	Ambit Workspace Solutions Metal Screen Liner	Exclave® Tackable Boards and Stowage Tackable Backdrop	Exclave Video-Friendly Tackable Boards & Stowage Tackable Backdrop	Personal Side Screen	Tu® Wood Storage Cubby Tackboard	Seating
Price Category 1																										
COM	Customer's Own Material A	1	1	1	1	1	1	1	1	1	1	1	1			1	1		1	1		1		1	1	1
2V_ _	Chain	•	•	•	•	•	22	•	•	•	•		•			•	•		•						•	
8T_ _	Crossing (85_ _)	2	2	•	•	•	•	2	•	•		•	•			•	•		•	•		•	8		•	18
3DE_ _	Dex	6	2	•	•	•	•	2	•	•		•	•			•	•		•	•		•		•	•	•
2I_ _	Grasscloth	•	•	•	•	•	•	•	•	•	•		•			•	•		•	•				•	•	
1MN_ _	Monologue	2	2	•	•	•	•	2	•	•	•		•			•	•		•	•				•	•	•
5T_ _	Resonance	•	•	•	•	•	•	•	•	•	•					•								•	•	
4SC_ _	Scatter	2	2				•		•	•	•	•	•			•	•		•	•		•		•	•	•
3DN_ _	Scribe	•	•	•	•	•	•	•	•	•	•	•	•			•	•		•	•		•		•	•	•
22F_ _	Slant	6	•		•	•	•		•	•	•					•									•	
235_ _	Tailored	•		•	•	•	8	•	•	•	•					•									•	•
1WS_ _	Whisper	2	2	•	•	•	•	2	•	•	•	•	•			•	•		•	•		•		•	•	•
Price Category 2																										
3AR_ _	Aristo	2	2	•	•	•	•	2	•	•	•	•	•			•	•		•	•		•		•	•	•
51_ _	Cord	•	•	•	•	•	•	•	•	•	•					•									•	
92_ _	Crepe	2	•	•	•	•	•	•	•	•	•	•				•	•			•		•	8	•		•
3EP_ _	Epic	2	2	•	•	•	•	2	•	•		•	•			•	•		•	•		•		•	•	•
3DP_ _	Hint	•	•	•	•	•	•		•	•	•	•				•	•		•	•		•		•	•	•
4N_ _	Horizon	2	2	•	•	•	•	•	•	•	•					•	•			•				•	•	
1HA_ _	Medley	2	2	•	•	•	•	•	•	•	•	•	•	•		•	•		•	•		•	8	•		•
4ME_ _	Mellow	2	2	•	•	•	•	2	•	•	•	•	•			•	•		•	•		•		•	•	•
ZMA_ _	Metaphor - Maharam A	2	2	2	2	•	•	2	•		•	•				•	•					•				•
8I1_ _	Muse - Maharam A	2	2	2	•		•	2	•		•	•	•			•	•		•	•		•		•		•
3SL_ _	Sequel			2				2																		•
4TE_ _	Terra	2	2	•	•	•	•	2	•	•	•	•	•			•	•		•	•		•		•	•	•
3TW_ _	Twine	•	•	•	21	•	•	•	•	•	•	•	•			•	•		•	•		•		•	•	
8R_ _	Twist (5S_ _)	5	2	•	•	•	•	2	•	•	•		•			•	•		•	•				•	•	18
Price Category 3																										
43Z_ _	Fractal	•	•	•	•	•	•	•	•	•	•	•	•			•	•		•	•		•		•	•	•
47_ _	Ground Cloth®	•	•	•	•	•	•	•	•	•	•	•	•			•	•		•	•		•	8	•	•	
ZM2_ _	Meld - Maharam A *	2	2	•	•	•	•	•	•	•	•	•	•			•	•		•	•		•		•		•
4GE_ _	Parcel	•	•	•	•	•	•	•	•	•	•	•	•			•	•		•	•		•		•	•	•
8W_ _	Strands	•	•	•	•	•	•	•	•	•			•			•	•		•	•				•	•	
Price Category 4																										
3DM_ _	Daydream	2	2	•			•	2	•	•	•	•	•			•	•		•	•		•		•	•	•
1HS_ _	Hush	•	•	•	•	•	•	•	•	•	•	•			•	•		•	•		•	•		•	•	
Price Category 5																										
3CY_ _	Cozy													•												
14A_ _	Hopsak	2	2	•	•		•	2	•	•	•	•				•						•			•	•
40G_ _	Method - Maharam A	2	2	2	2	•	•	2	•	•	•	•	•			•	•		•	•		•		•		•
ZNC_ _	Nico - Maharam A	2	2	2	•	•	•	2	•	•	•	•	•			•	•		•	•		•		•		•
Price Category 6-7																										
No fabrics available at this time.																										

continued on next page

Textiles Application Chart — Workspaces *continued*

• *Available*

A *Assigned lead-time textile.*

A *Maharam textiles are on assigned lead times.*

See page 2 for exception notes.

	Action Office® Panels/Connectors	Action Office B-Style Tackboards	Action Office/Ethospace E-Style Storage	Ethospace Tiles/Connectors	Ethospace/Canvas Office Landscape® Privacy Doors	Canvas Tiles/Extended Width Tiles/Channel Tiles	Canvas B-/E-Style Storage	Canvas Tackboards	Canvas Metal Desk Hutch Back Panel	Canvas Vista™ Movable Insert and Display Unit	OE1 Boundary Agile Wall Tile	OE1 Boundary Project Board and Screens	OE1 Floating Screen	OE1 Nook Liner/Felt Screen Liner/Storage Trolley Liner	Overlay™ Performance Wall Cladding	Pari™ Screens/Flat Edge Screens/Channel Screens	Passport Work Table Screen	Renew™ Link Screens	Ambit™ Workspace Solutions Screen	Ambit Workspace Solutions Metal Screen Liner	Exclave® Tackable Boards and Stowage Tackable Backdrop	Exclave Video-Friendly Tackable Boards & Stowage Tackable Backdrop	Personal Side Screen	Tu® Wood Storge Cubby Tackboard	Seating
Price Category 8																									
1QG_ _Breeze - Maharam A													•												
Price Category 9																									
No fabrics available at this time.																									
Price Category A																									
No fabrics available at this time.																									
Price Category B																									
VM_ _ Medium - Maharam A		2				•	20	•	•	•					•										•
TI_ _ Messenger - Maharam A *		2	•	12	•	•	2	•	•	•					•	•			•						•
Price Category C																									
Z27_ _Manner - Maharam A	2	2	2	•		•	2	•	•	•					•	•			•						•
Z3_ _ Metric - Maharam A	2	2			•	•		•	•	•					•	•			•						•
Price Category D																									
ZMD_ _Mode - Maharam A	2																				•				•
ZS3_ _Spiral - Maharam A	•	•	•	•		•	•	•	•	•					•										
Price Category E																									
ZF3_ _ Flock - Maharam A												•			•				•						
TT_ _ Parallel - Maharam A	7	•		•	•	•	16	•	•	•					•										
Price Category F																									
8EX_ _ Emit - Maharam A	2	2	2	•	•	•	2	•	•																
Price Category G-Z																									
No fabrics available at this time.																									

Application Note: Herman Miller cannot guarantee material/pattern alignment in adjacent products. For example, a fabric's pattern may not align from one screen to the next, or from one panel to the next.

** Available in select colors on 20-day lead-time. Refer to "Maharam Colors - Workspaces" for 20-day colors.*

1 *Refer to price book appendices and Omni for COM information.*
2 *Available on all products except 54" and 60" wide.*
3 *Not available on AO partial-glazed panels.*
4 *Not available on Action Office (AO®) acoustical panels.*
5 *(8R_ _), (8T_ _), (85_ _), and (5S_ _) not available on AO acoustical panels and not available on 54"- or 60"-wide products.*
6 *Not available on Action Office (AO®) connectors, cable management, and spacers.*
7 *Not available on AO acoustical panels; not available on AO2 cable management panel face.*
8 *Available in select colors. See the "Proprietary Textile Colors — Workspaces" appendix.*
12 *Not available on Ethospace tackable tiles.*
16 *Not available on Canvas E-style storage.*
18 *Available on seating products in select colors. See the "Proprietary Textile Colors — Seating" appendix.*
20 *Not available on Canvas E-style storage or 60"-wide B-style storage.*
21 *Not available on Ethospace connectors and cable management tiles.*
22 *Not available as railroaded application option for* Chain *(2V00) on Canvas Extended Width Tiles.*

Price Category 1

Customer's Own Material

See Order Information in Appendices. Assigned lead-time textile. A

8Z Pellicle®

Seating
For New Aeron® Chairs
56% elastomeric
44% polyester

23101	Mineral
23102	Carbon
23103	Graphite

AireWeave™ 2

Seating
For Mirra® 2 Chairs
67% elastomeric
33% antimony-free polyester

1A701	Alpine
1A702	Slate Grey
1A703	Graphite
1A704	Lime Green
1A705	Cappuccino
1A706	Urban Orange
1A707	Dark Turquoise
1A708	Twilight

Chain

Workspaces
66" wide
100% recycled polyester
with 12% ocean bound plastic

2V01	Pearl
2V02	Oyster
2V03	Wheat
2V04	Linen
2V05	Wicker
2V06	Bamboo
2V07	Sage
2V08	Spring Wood
2V09	Iceberg

Crossing

Seating/Workspaces
54" wide
86% antimony-free polyester
14% polyester

8T03	Wicker *
8T04	Porcelain *
8T05	Warm Grey *
8T10	Tomato
8T17	Cerulean
8T18	Indigo
8T19	Shale *
8T22	Tin *
8T23	Graphite
8T24	Black

Crossing

Workspaces
For workspaces products only.
54" wide
86% antimony-free polyester
14% polyester

8501	Ivory *
8502	Oyster *

* Colors available on Exclave® Video-friendly Tackable Boards and Stowage Tackable Backdrop

Dex

Ancillary/Seating/Workspaces
54" wide
67% recycled polyester
33% polyester

3DE01	Frost
3DE02	Silver Pine
3DE03	Stone
3DE04	Shale
3DE05	Charcoal
3DE06	Gossamer
3DE07	Pine

Duo

Seating
For Lino™ Chairs
52% polyester
48% elastomeric

4RM01	Mineral
4RM02	Poppy
4RM03	Green Leaf
4RM04	Jade
4RM05	Shadow
4RM06	Graphite

Flexnet™

Seating
For Caper® Chairs
69% elastomeric
31% polyester

6V01	Black
6V02	Silver Grey

Grasscloth

Workspaces
66" wide
100% recycled polyester
with 11% ocean bound plastic

2I01	Silver Birch
2I02	Pampas
2I03	Sedge
2I07	Lea
2I08	Taro
2I09	Steam Grey
2I13	Gravel

Intercept

Seating
For Cosm™ Chairs
60% elastomeric
40% polyester

84501	Graphite
84502	Carbon
84503	Mineral
84504	Nightfall
84505	Glacier
84506	Canyon

Interweave 2

Seating
For Verus™ Chairs
65% elastomeric
35% polyester

36501	Iceberg
36502	Poppy
36503	Beachglass
36504	Blue Grotto
36505	Slate
36506	Shale

Lyris 2™

Seating
For Setu® Chairs
74% elastomeric
26% polyester

4W21	Alpine
4W23	Chartreuse
4W25	Berry Blue
4W26	Slate Grey
4W28	Chino
4W31	Graphite

Monologue

Ancillary/Seating/Workspaces
54" wide
56% recycled polyester
44% polyester

1MN01	Linen
1MN02	Alabaster
1MN04	Folkstone
1MN05	Silver Pine
1MN06	Slate
1MN07	Seed
1MN09	Persimmon
1MN11	Meadow
1MN12	Blue Sky
1MN13	Blue Spruce
1MN14	Deep Sea

Price category 1 continued on next page

- Maharam textiles are on assigned lead times A.
- Fabric numbers are listed as Herman Miller fabric number/Maharam fabric number.

Price Category 1
continued

Resonance
Workspaces
66” wide
100% polyester

5T04	Greige
5T05	Porcelain
5T06	Alabaster
5T15	Iris
5T28	Sugar
5T47	Tobacco
5T54	Saltbush
5T57	Seed
5T58	Sepia
5T60	Iceberg
5T65	Red
5T67	Boysenberry
5T68	Pistachio
5T69	Green Apple
5T71	Jade
5T72	Blue Green
5T74	Twilight

Ripple 3D Knit
Seating
Available only on Zeph® Chairs.
knit to size
99% recycled polyester
1% lycra

5H201	Black
5H202	Carbon
5H203	Alpine
5H204	Silt
5H205	Tea Rose
5H206	Cocoa
5H207	Persimmon
5H208	Blaze
5H209	Cayenne
5H210	Falcon
5H211	Mustard Seed
5H212	Patina
5H213	Olive
5H214	Moss
5H215	Aloe
5H216	Glacier
5H217	Ultramarine
5H218	Nightfall
5H219	Bluebell
5H220	Boysenberry
5H221	Nightfall/Bluebell
5H222	Patina/Alpine
5H223	Cayenne/Glacier
5H224	Tea Rose/Olive
5H225	Silt/Blaze

Scatter
Ancillary/Seating/Workspaces
54” wide
100% recycled polyester,
with 26% ocean bound plastic

4SC01	Alpine
4SC02	Fog
4SC03	Shale
4SC04	Persimmon
4SC07	Olive
4SC08	Glacier
4SC09	Blue Sky
4SC10	Lagoon
4SC11	Slate Grey
4SC12	Blue Black

Scribe
Seating/Workspaces
54” wide
100% recycled polyester
with 53% ocean bound plastic

3DN01	Spring Wood
3DN02	Poplar
3DN03	Pewter
3DN04	Deep Sea
3DN05	Fir
3DN06	Nutmeg

Slant
Workspaces
66” wide
51% polyester
49% recycled polyester

22F04	Pesto
22F06	Neptune
22F07	Blueberry
22F10	Pumpkin
22F12	Silver Birch
22F13	Bluestone
22F15	Shale

Splash 3D Knit
Seating
Available only on Zeph® Chairs.
knit to size
98% recycled polyester
2% lycra

5H101	Black
5H102	Carbon
5H103	Alpine
5H104	Silt
5H105	Tea Rose
5H106	Cocoa
5H107	Persimmon
5H108	Blaze
5H109	Cayenne
5H110	Falcon
5H111	Mustard Seed
5H112	Patina
5H113	Olive
5H114	Moss
5H115	Aloe
5H116	Glacier
5H117	Ultramarine
5H118	Nightfall
5H119	Bluebell
5H120	Boysenberry

Stretch Knit
Seating
Assigned lead-time textile. A
Available only on Sayl®
Suspension Back Work Chairs
97% polyester, 3% spandex

3DK01	Fog
3DK02	Slate Grey
3DK03	Java
3DK04	Black
3DK05	Red
3DK06	Green Apple
3DK07	Berry Blue

Price category 1 continued on next page

- Maharam textiles are on assigned lead times A.
- Fabric numbers are listed as Herman Miller fabric number/Maharam fabric number.

Price Category 1
continued

Tailored	
Ancillary/Seating/Workspaces	
54” wide	
56% polyester	
44% recycled polyester	
23501	Studio White * **
23502	Sugar *
23503	Tomato
23506	Chive
23508	Cobalt
23509	Cadet
23510	Fog
23511	Graphite
23512	Black
23513	Coffee

* Colors not available on Plex™ Lounge Furniture.
** Color not available on Canvas Tiles.

Tuck 3D Knit	
Seating	
Available only on Fuld Nesting Chairs.	
knit to size	
56% polyester	
44% recycled polyester	
9NK01	Alpine
9NK02	Carbon
9NK03	Nightfall
9NK04	Olive
9NK05	Cocoa
9NK06	Canyon

Whisper	
Ancillary/Seating/Workspaces	
54” wide	
73% recycled polyester	
27% polyester	
with 11.3% ocean bound plastic	
1WS01	Sand Dollar
1WS02	Pebble
1WS03	Silver Birch
1WS04	Iceberg
1WS05	Silver Pine
1WS06	Carbon
1WS07	Cumin
1WS12	Willow
1WS13	Sea Grass
1WS14	Pool
1WS15	Blueberry
1WS16	Glacier
1WS17	Grey
1WS18	Canyon

Price Category 2

Aristo	
Ancillary/Seating/Workspaces	
54” wide	
88% recycled polyester	
12% polyester	
Acrylic backing	
3AR01	Forest Moss
3AR02	Light Brindle
3AR03	Mink
3AR04	Copper
3AR05	Adobe
3AR06	Cherry
3AR07	Lilac
3AR08	Green Apple
3AR09	Surf
3AR10	Waterfall
3AR11	Cadet
3AR12	Tin
3AR13	Pewter
3AR14	Grey Brindle
3AR15	Grey Black

Cord	
Workspaces	
66” wide	
51% antimony-free polyester	
49% polyester	
5101	Ivory
5102	White Ash
5103	Linen
5104	Bamboo
5105	Sepia
5107	Sesame
5109	Bayou
5111	Spring Wood
5112	Summer White

Crepe	
Ancillary/Seating/Workspaces	
54” wide	
100% recycled polyester,	
with 43.6% ocean bound plastic	
9201	Licorice
9203	Smoke
9207	Cherry
9223	Cadet
9241	Beachglass
9249	Stone *
9251	Fog *
9252	Slate Grey
9261	Shale
9262	Graphite
9265	Mineral
9266	Persimmon
9267	Juniper
9268	Glacier
9269	Cascade
9270	Navy

* Colors available on Exclave® Video-friendly Tackable Boards and Stowage Tackable Backdrop.

Price category 2 continued on next page

- Maharam textiles are on assigned lead times A.
- Fabric numbers are listed as Herman Miller fabric number/Maharam fabric number.

Price Category 2
continued

Epic
Ancillary/Seating/Workspaces
54” wide
56% recycled polyester
44% polyester
Acrylic backing

3EP01	Alabaster
3EP02	Smoke
3EP03	Falcon
3EP05	Copper
3EP06	Urban Orange
3EP07	Poppy
3EP10	Clover
3EP11	Loden
3EP14	Peacock
3EP15	Cadet
3EP16	Indigo
3EP17	Spring Wood
3EP18	Grey Brindle
3EP19	Seed
3EP20	Carbon Dark

Hint
Ancillary/Seating/Workspaces
54” wide
76% recycled polyester
24% polyester

3DP01	Sediment
3DP02	Gunmetal
3DP03	Silt
3DP04	Porcelain
3DP05	Indigo
3DP06	Fern
3DP07	Adobe
3DP08	Red Sea

Horizon
Workspaces
54” wide
65% antimony-free polyester
35% polyester

4N01	Rye Grass
4N02	Sugar Pine
4N03	Silver Pine
4N04	White Ash
4N05	Spring Wood
4N08	Haystack
4N09	Oat Grass
4N13	Pine Cone
4N15	Elderberry

Marvel
Ancillary/Seating
54” wide
100% pvc-free polyurethane
antimicrobial, antibacterial finish

1MV01	Summer White
1MV02	Sand Dollar
1MV03	Espresso
1MV04	Folkstone Grey
1MV05	Graphite
1MV06	Onyx
1MV07	Polar Blue
1MV08	Blush Grey
1MV12	Red
1MV14	Pine
1MV15	Teal Green
1MV16	Twilight

Medley
Ancillary/Seating/Workspaces
54” wide
100% polyester

1HA01	Stone *
1HA02	Trail
1HA03	Charcoal
1HA04	Cinder
1HA07	Chutney
1HA09	Feather Grey *
1HA11	Loden
1HA13	Bayou *
1HA14	Blue Grotto
1HA15	Blueberry
1HA22	Khaki
1HA23	Pewter
1HA24	Yellow Oxide
1HA25	Vintage Rose
1HA26	Raspberry
1HA27	Acai Berry

* Colors available on Exclave® Video-friendly Tackable Boards and Stowage Tackable Backdrop

Mellow
Ancillary/Seating/Workspaces
54” wide
100% recycled polyester,
with 16% ocean bound plastic

4ME01	Mineral
4ME04	Olive
4ME05	Glacier
4ME06	Oceanside
4ME07	Charcoal

Metaphor – Maharam
Ancillary/Seating/Workspaces
54” wide
100% polyester
Acrylic backing

ZMA01/466553-001	Afterfeather *
ZMA02/466553-002	Moonflower
ZMA03/466553-003	Handcraft
ZMA04/466553-004	Crossroad
ZMA05/466553-005	Chondrite
ZMA06/466553-006	Detective
ZMA07/466553-007	Steamship
ZMA08/466553-008	Electricity
ZMA09/466553-009	Takeoff
ZMA10/466553-010	Parachute
ZMA11/466553-011	Blueshift
ZMA12/466553-012	Dockyard
ZMA13/466553-013	Bathe
ZMA14/466553-014	Icebound
ZMA15/466553-015	Thermosphere
ZMA16/466553-016	Aboard
ZMA17/466553-017	Agateware
ZMA18/466553-018	Homeland
ZMA19/466553-019	Rockfall
ZMA20/466553-020	Undergrowth
ZMA21/466553-021	Gremolata
ZMA22/466553-022	Patina
ZMA23/466553-023	Sylvan
ZMA24/466553-024	Outfield
ZMA25/466553-025	Windbreak
ZMA26/466553-026	Saguaro

Price category 2 continued on next page

- Maharam textiles are on assigned lead times A.
- Fabric numbers are listed as Herman Miller fabric number/Maharam fabric number.

Price Category 2
continued

Metaphor *continued*	
ZMA27/466553-027	Barnwood
ZMA28/466553-028	Cookshop
ZMA29/466553-029	Amandine
ZMA30/466553-030	Bodhran
ZMA31/466553-031	Centerstage
ZMA32/466553-032	Focaccia
ZMA33/466553-033	Bumblebee
ZMA34/466553-034	Microbrew
ZMA35/466553-035	Sauna
ZMA36/466553-036	Gazebo
ZMA37/466553-037	Pirouette
ZMA38/466553-038	Heartbeat
ZMA39/466553-039	Shino
ZMA40/466553-040	Sunrise
ZMA41/466553-041	Florist
ZMA42/466553-042	Beadwork
ZMA43/466553-043	Framboise
ZMA44/466553-044	Wisteria
ZMA45/466553-045	Warrior

* Colors not available on Eames Aluminum Group, Soft Pad, Sofa Compact, Molded Fiberglass/Plastic Chairs, Task Chair, Wire Chairs, Nelson Platform Bench Cushion, Swoop Plywood Lounge Chair.

Muse – Maharam	
Ancillary/Seating/Workspaces	
54” wide	
100% post-consumer recycled polyester	
8I101/466487-001	Crescendo
8I102/466487-002	Resonate
8I103/466487-003	Runway
8I104/466487-004	Ascend
8I105/466487-005	Veil *
8I106/466487-006	Refresh *
8I107/466487-007	Clear *
8I108/466487-008	Fantasy
8I109/466487-009	Miso
8I110/466487-010	Compass
8I111/466487-011	Bergamot *
8I112/466487-012	Grasshopper

Muse *continued*	
8I113/466487-013	Goal
8I114/466487-014	Mistletoe
8I115/466487-015	Seaglass *
8I116/466487-016	Frigid
8I117/466487-017	Riverbend
8I118/466487-018	Noble
8I119/466487-019	Pulsar
8I120/466487-020	Velella
8I121/466487-021	Sailboat
8I122/466487-022	Sparse
8I123/466487-023	Vase
8I124/466487-024	Haven
8I125/466487-025	Mead
8I126/466487-026	Neat
8I127/466487-027	Jovial
8I128/466487-028	Theater
8I129/466487-029	Poinsettia
8I130/466487-030	Celebrate
8I131/466487-031	Spectacle

* Colors not available on Valor Seating.

Rhythm	
Ancillary/Seating	
54” wide	
100% polyester	
3002	Green Apple
3004	Bayou
3005	Berry Blue
3006	Iris
3007	Twilight
3009	Poppy
3010	Molasses
3012	Khaki
3013	Mink
3014	Black *
3015	Charcoal *

* Colors available on Embody® Chair.

Sequel	
Ancillary/Seating/Workspaces	
54” wide	
100% vinyl	
100% polyester knit backing	
Resilience® finish	
3SL01	White
3SL02	Pebble
3SL03	Mushroom
3SL04	Stone
3SL06	Rattan
3SL09	Seal
3SL10	Blue Fog
3SL11	Folkstone
3SL12	Shale
3SL13	Slate Grey
3SL14	Charcoal
3SL15	Carbon Dark
3SL28	Navy *

* Color available on Eames® Tandem Sling Seating.

Terra	
Ancillary/Seating/Workspaces	
54” wide	
100% post-consumer recycled biodegradable polyester *	
4TE01	Spring Wood
4TE02	Zinc
4TE03	Pine Cone
4TE04	Charcoal

* 1% biodegradation in 1,278 days under ASTM D5511 conditions. No evidence of further degradation.

Twine	
Workspaces	
66” wide	
100% recycled polyester	
3TW01	Silver Birch
3TW02	Ivory
3TW03	Alabaster
3TW04	Bamboo
3TW05	Iceberg
3TW06	Charcoal
3TW07	Feather Grey
3TW08	Shale

Twist	
Ancillary/Seating/Workspaces	
54” wide	
80% antimony-free polyester	
13% recycled polyester	
7% polyester	
8R05	Wicker
8R10	Poppy
8R14	Tin
8R15	Shale
8R16	Graphite
8R17	Birch
8R18	Sepia
8R22	Blueberry
8R23	Green Apple
8R26	Gunmetal
8R27	Cinder
8R29	Pekoe
8R33	Forest
8R35	Waterfall
8R36	Midnight Blue
8R37	Carbon Dark

Twist	
Workspaces	
For workspaces products only.	
54” wide	
80% antimony-free polyester	
13% recycled polyester	
7% polyester	
5S03	Oyster

- Maharam textiles are on assigned lead times A.
- Fabric numbers are listed as Herman Miller fabric number/Maharam fabric number.

Price Category 3

Ace

Ancillary/Seating
54” wide
100% polyurethane
Polyester knit backing
Stain resistant finish

3AC01	Summer White
3AC02	White Ash
3AC03	Rye
3AC04	Metal
3AC05	Clay
3AC06	Chestnut
3AC08	Camelback
3AC09	Chipotle
3AC12	Artichoke
3AC13	Sepia Dark
3AC14	Aloe
3AC15	Flint
3AC16	Blue Sky
3AC17	Oceanside
3AC18	Midnight
3AC20	Frost
3AC21	Lead
3AC22	Black

Fractal

Ancillary/Seating/Workspaces
58” wide
84% recycled polyester
16% polyester

43Z01	Granite
43Z02	Golden Olive
43Z03	Verdant
43Z04	Cadet

Ground Cloth®

Workspaces
66” wide
100% polyester

4701	Vapor Grey
4721	Warm White *
4722	Fog *
4723	Straw *
4724	Red Orange *
4726	Green Apple *
4727	Caribbean *
4728	Midnight *
4729	Cappuccino *

* Colors available on Exclave® Video-friendly Tackable Boards and Stowage Tackable Backdrop

Latitude

Seating
Colors for Mirra 2 Chairs
100% polyester

8M10	Alpine
8M17	Black
8M23	French Press
8M27	Cordovan
8M28	Ochre
8M28	Ultramarine
8M28	Olive

Meld – Maharam

Ancillary/Seating/Workspaces
54” wide
68% post-consumer recycled polyester
32% polyester
PFOA-Free stain resistant

ZM201/466387-201	Vast
ZM202/466387-202	Panda **
ZM203/466387-203	Skyline *
ZM204/466387-204	Knight **
ZM205/466387-205	Quill **
ZM206/466387-206	Pipe
ZM207/466387-207	Grate *
ZM208/466387-208	Gloss

Meld *continued*

ZM209/466387-209	Bulb
ZM210/466387-210	Bride
ZM211/466387-211	Stark
ZM212/466387-212	Seashell
ZM213/466387-213	Antler
ZM214/466387-214	Crater *
ZM215/466387-215	Perennial
ZM216/466387-216	Mulberry
ZM217/466387-217	Fuchsia *
ZM218/466387-218	Amethyst *
ZM219/466387-219	Merlot
ZM220/466387-220	Magma *
ZM221/466387-221	Rooster
ZM222/466387-222	Heat *
ZM223/466387-223	Clementine
ZM224/466387-224	Fox
ZM225/466387-225	Kiss *
ZM226/466387-226	Bare
ZM227/466387-227	Blonde
ZM228/466387-228	Mimosa
ZM229/466387-229	Comet *
ZM230/466387-230	Honeydew
ZM231/466387-231	Wild *
ZM232/466387-232	Vine
ZM233/466387-233	Seed
ZM234/466387-234	Kale *
ZM235/466387-235	Waterfall *
ZM236/466387-236	Nordic *
ZM237/466387-237	Reef *
ZM238/466387-238	Wave
ZM239/466387-239	Isle **
ZM240/466387-240	Creek
ZM241/466387-241	Mariner *
ZM242/466387-242	Globe
ZM243/466387-243	Spa

* Colors available on 20-day lead time.
** Colors available on 10-day lead time.

Parcel

Ancillary/Seating/Workspaces
54” wide
100% recycled polyester

4GE01	Gunmetal
4GE02	Brindle
4GE03	Bayou
4GE04	Pesto
4GE05	Golden Olive
4GE06	Copper Sea

Saille - Geiger Textile

Ancillary
57” wide
69% cotton
31% polyester
PFOA-Free stain resistant finish
Acrylic backing

18001	Coal
18002	Shale
18003	Haze
18004	Stone
18005	White *
18006	Beach
18007	Sand
18008	Blush
18009	Brick
18010	Fog
18011	Celadon
18012	Poolside
18013	Summer Sky
18014	Lake
18015	Midnight Blue

* Color not available on Eames® Soft Pad Group Chairs/Ottomans.

Price category 3 continued on next page

- Maharam textiles are on assigned lead times A.
- Fabric numbers are listed as Herman Miller fabric number/Maharam fabric number.

Price Category 3
continued

Price Category 4

Strands

Workspaces
66” wide
100% recycled polyester

8W01	Pebble
8W02	Porcelain
8W03	Taupe
8W04	Honey
8W05	Khaki
8W06	Rye
8W07	Wicker
8W08	Tin
8W09	Cool Grey

Cygnus

Ancillary
For Eames® Aluminum Group Chairs
69% elastomeric
31% polyester

5401	Black
5402	Zinc
5403	Quartz

Daydream

Ancillary/Seating/Workspaces
54” wide
48% wool
41% recycled polyester
9% nylon
2% polyester

3DM01	Rye Grass
3DM02	Silver Birch
3DM03	Pewter
3DM04	Graphite
3DM05	Black
3DM06	Lemongrass
3DM07	Permission
3DM08	Juniper
3DM09	Sea Grass
3DM10	Nightfall

Hush

Workspaces
66” wide
80% polyester
20% viscose

1HS01	Canyon
1HS02	Pesto
1HS03	Bayou
1HS04	Greystone
1HS05	Charcoal
1HS06	Rye Grass
1HS07	Cool Grey
1HS08	Dark Grey
1HS09	Aqua Green
1HS10	Nightfall

Kalista - Geiger Textile

Ancillary
54” wide
71% post-industrial recycled cotton
18% post-industrial recycled polyester
11% polyester
PFOA-Free stain resistant finish

1AL01	Cotton
1AL02	Natural
1AL03	Titanium
1AL04	Pewter
1AL05	Starry Night
1AL06	Red Hot
1AL07	Sun Kissed
1AL08	Dune
1AL09	Beach Glass
1AL10	Bluestone
1AL11	Seaside
1AL12	Night Sky

Lariat – Maharam

Ancillary/Seating
54” wide
100% vinyl

ZLR01/440401-001	001
ZLR02/440401-002	002
ZLR04/440401-004	004
ZLR06/440401-006	006
ZLR07/440401-007	007
ZLR08/440401-008	008
ZLR10/440401-010	010
ZLR11/440401-011	011
ZLR13/440401-013	013
ZLR14/440401-014	014
ZLR15/440401-015	015
ZLR16/440401-016	016
ZLR18/440401-018	018
ZLR20/440401-020	020
ZLR21/440401-021	021
ZLR24/440401-024	024
ZLR25/440401-025	025
ZLR26/440401-026	026

Lariat *continued*

ZLR28/440401-028	028
ZLR31/440401-031	031
ZLR32/440401-032	032
ZLR33/440401-033	033
ZLR34/440401-034	034
ZLR38/440401-038	038
ZLR39/440401-039	Granite
ZLR40/440401-040	Linen
ZLR41/440401-041	Stella
ZLR42/440401-042	Saddle
ZLR43/440401-043	Holly
ZLR44/440401-044	Maroon
ZLR45/440401-045	Siren
ZLR46/440401-046	Reseda
ZLR47/440401-047	Purslane
ZLR48/440401-048	Spire
ZLR49/440401-049	Papyrus
ZLR50/440401-050	Chickadee
ZLR51/440401-051	Requiem

Sync

Ancillary/Seating
55” wide
100% polyester

3SY01	Pine Cone
3SY03	Canyon
3SY04	Truffle
3SY06	Everglade
3SY08	Nightfall
3SY09	Dark Mineral
3SY10	Slate Grey
3SY11	Dark Carbon
3SY12	Black

- Maharam textiles are on assigned lead times A.
- Fabric numbers are listed as Herman Miller fabric number/Maharam fabric number.

Price Category 5

Arlo - Maharam

Ancillary/Seating
70% wool
30% polyester

5YT01	Turn
5YT02	Embers
5YT03	Parallel
5YT04	Octave
5YT05	Musing
5YT06	Summon
5YT07	Dynamic
5YT08	Signals
5YT09	Aspect
5YT10	Dedicate
5YT11	Juniper
5YT12	Cilantro
5YT13	Hawthorn
5YT14	Thread
5YT15	Spalted
5YT16	Warmer
5YT17	Misted
5YT18	Share
5YT19	Chord
5YT20	Heroic
5YT21	Arpeggio
5YT22	Roots
5YT23	Sumac
5YT24	Purl
5YT25	Homeward

Cozy

Ancillary/Seating
54” wide
100% wool

3CY01	Heathered Warm Grey
3CY02	Heathered Rye Grass
3CY03	Heathered Cool Grey
3CY05	Heathered Black
3CY06	Heathered Persimmon
3CY07	Heathered Loden
3CY09	Heathered Lagoon
3CY10	Heathered Twilight

Hopsak

Ancillary/Seating/Workspaces
56” wide
100% recycled polyester

14A20	Black
14A22	Raw Umber Dark
14A26	Grey Blue Dark
14A30	Sepia Dark
14A38	Emerald Dark
14A39	Yellow Dark
14A40	Orange
14A41	Sienna
14A42	Olive Green Dark
14A43	Crimson
14A44	Crimson Dark Dark
14A45	Violet Dark
14A46	Pink Dark Dark
14A47	Ultramarine Dark
14A48	Cobalt Blue
14A49	Terra Cotta
14A50	Ochre Dark

Ingenue - Geiger Textile

Ancillary
54” wide
28% wool
26% viscose
25% acrylic
16% polyester
5% cotton
PFOA-Free stain resistant finish

1GH01	Sand
1GH02	Fog
1GH03	Flannel
1GH04	Trench
1GH05	Vermillion
1GH06	Adriatic
1GH07	Umber
1GH08	Charcoal

Method - Maharam

Ancillary/Seating/Workspaces
54” wide
100% recycled polyester
with 9% ocean-bound plastic

40G01/466579-001	Inspire
40G02/466579-002	Rhea
40G03/466579-003	Noise
40G04/466579-004	Speedway
40G05/466579-005	Villanelle
40G06/466579-006	Maestro
40G07/466579-007	Destiny
40G08/466579-008	Possess
40G09/466579-009	Waterside
40G10/466579-010	Relax
40G11/466579-011	Delightful
40G12/466579-012	Parrotlet
40G13/466579-013	Verdurous
40G14/466579-014	Bosky
40G15/466579-015	Acreage
40G16/466579-016	Allude
40G17/466579-017	Tweed
40G18/466579-018	Korma
40G19/466579-019	Fossilize
40G20/466579-020	Cattail
40G21/466579-021	Shortcake
40G22/466579-022	Racecar
40G23/466579-023	Courtship
40G24/466579-024	Jam
40G25/466579-025	Sparrow

Nico - Maharam

Ancillary/Seating/Workspaces
54” wide
63% wool
21% polyester
16% solution-dyed nylon

ZNC01/466564-001	Alcazar
ZNC02/466564-002	Ironclad
ZNC03/466564-003	Tune
ZNC04/466564-004	Bridegroom
ZNC05/466564-005	Diode
ZNC06/466564-006	Jest
ZNC07/466564-007	Sanctuary
ZNC08/466564-008	Aquarius
ZNC09/466564-009	Houseboat
ZNC10/466564-010	Olympian
ZNC11/466564-011	Tennis
ZNC12/466564-012	Dressage
ZNC13/466564-013	Zing
ZNC14/466564-014	Bitterroot
ZNC15/466564-015	Gemini
ZNC16/466564-016	Posh
ZNC17/466564-017	Sizzle
ZNC18/466564-018	Cheerful
ZNC19/466564-019	Watermelon
ZNC20/466564-020	Toucan
ZNC21/466564-021	Rosin
ZNC22/466564-022	Jousting
ZNC23/466564-023	Jojoba
ZNC24/466564-024	Dromedary
ZNC25/466564-025	Toasty
ZNC26/466564-026	Casaba
ZNC27/466564-027	Greenhouse
ZNC28/466564-028	Sibyl
ZNC29/466564-029	Spearmint
ZNC30/466564-030	Pothos
ZNC31/466564-031	Calathea
ZNC32/466564-032	Landscape
ZNC33/466564-033	Espalier
ZNC34/466564-034	Gecko
ZNC35/466564-035	Meditation

Price category 5 continued on next page

- Maharam textiles are on assigned lead times A.
- Fabric numbers are listed as Herman Miller fabric number/Maharam fabric number.

Price Category 5
continued

Price Category 6

Price Category 7

Summit	
Ancillary/Seating	
54” wide	
100% silicone	
Polyester knit backing	
3SU02	Oyster
3SU03	Zinc
3SU04	Sparrow
3SU07	Black
3SU09	Beachglass
3SU10	Midnight

Vionette - Geiger Textile	
Ancillary	
55” wide	
100% polyester	
1GJ01	White Sand Mix
1GJ02	Desert Mix
1GJ03	Light Gray Mix
1GJ04	Pewter Mix
1GJ05	Cobalt Mix
1GJ06	Prussian Blue Mix
1GJ07	Chocolate Mix
1GJ08	Champagne
1GJ09	Morning Sky
1GJ10	Aquatic
1GJ11	Sapphire
1GJ12	Midnight Blue
1GJ13	Shadow
1GJ14	Java
1GJ15	Carbon
1GJ16	Black
1GJ17	Claret
1GJ18	Poppy

Balance	
Seating	
For Embody® chairs	
100% polyester	
3512	Carbon
3513	Black

Outdoor Weave	
Ancillary	
For Eames® Aluminum Group	
Outdoor Chairs	
50% elastomeric	
50% polypropylene	
7203	Lead
7205	Graphite

Customer’s Own Leather
See Order Information in Appendices. Assigned lead-time textile. A

Bamboo	
Ancillary	
83% bamboo	
17% polyurethane	
1BB01	Ivory
1BB02	Russet
1BB03	Black

Beck – Maharam	
Ancillary/Seating	
55” wide	
78% wool	
22% nylon	
ZB301/466571-001	Overshadow
ZB302/466571-002	Molecule
ZB303/466571-003	Zeitgeist
ZB304/466571-004	Blacksmith
ZB305/466571-005	Cornerstone
ZB306/466571-006	Chainmail
ZB307/466571-007	Buckram
ZB308/466571-008	Callisto
ZB309/466571-009	Interlude
ZB310/466571-010	Letterpress
ZB311/466571-011	Memoir
ZB312/466571-012	Litmus
ZB313/466571-013	Stoic
ZB314/466571-014	Inkpad
ZB315/466571-015	Praxis
ZB316/466571-016	Astute
ZB317/466571-017	Percolate
ZB318/466571-018	Halocline
ZB319/466571-019	Semblance
ZB320/466571-020	Loch
ZB321/466571-021	Lido
ZB322/466571-022	Underwater
ZB323/466571-023	Tetrapod
ZB324/466571-024	Nymph
ZB325/466571-025	Appalachian

Beck *continued*		
ZB326/466571-026	Menthol	
ZB327/466571-027	Woodruff	
ZB328/466571-028	Malachite	
ZB329/466571-029	Botanist	
ZB330/466571-030	Woodlet	
ZB331/466571-031	Katydid	
ZB332/466571-032	Exuberant	
ZB333/466571-033	Retrospect	
ZB334/466571-034	Lambic	
ZB335/466571-035	Argil	
ZB336/466571-036	Brushstroke	
ZB337/466571-037	Candescent	
ZB338/466571-038	Reedbuck	
ZB339/466571-039	Clayware	
ZB340/466571-040	Curio	
ZB341/466571-041	Whimsy	
ZB342/466571-042	Effervescent	
ZB343/466571-043	Lingonberry	
ZB344/466571-044	Resplendent	
ZB345/466571-045	Hollyhock	
ZB346/466571-046	Filigree	
ZB347/466571-047	Plutonic	
ZB348/466571-048	Foundry	
ZB349/466571-049	Patisserie	
ZB390	Gold	007/032/033 *
ZB391	Russet	036/040/039 *
ZB392	Indigo	008/013/014 *
ZB393	Forest	006/031/028 *

* Colors available only on Girard Color Wheel Ottoman.

Price category 7 continued on next page

- Maharam textiles are on assigned lead times A.
- Fabric numbers are listed as Herman Miller fabric number/Maharam fabric number.

Price Category 7
continued

Bellano - Geiger Textile

Ancillary
55” wide
75% wool
10% linen
8% nylon
7% alpaca

1AX01	Pearl
1AX02	Fog
1AX03	Fawn
1AX04	Pumice
1AX05	Pewter
1AX06	Atlantic
1AX07	Black Green
1AX08	Adriatic
1AX09	Coffee
1AX10	Charcoal
1AX11	Umber
1AX12	Magenta
1AX13	Bittersweet
1AX14	Sunflower

Capri - Geiger Textile

Ancillary
55” wide
36% cotton
32% acrylic
24% rayon
8% polyester
PFOA-Free stain resistant finish
Acrylic backing

17201	Snow
17202	Stone
17203	Trench
17204	Graphite
17205	Anthracite
17206	Light Silver
17207	Russet
17208	Chestnut Brown
17209	Sand
17210	Sterling
17211	Cobalt
17212	Ink

Mantle - Maharam

Ancillary/Seating
59% recycled polyester
37% polyester
4% spandex

8PV01	Pavement
8PV02	Future
8PV03	Piper
8PV04	Manifesto
8PV05	Mapo
8PV06	Redwood
8PV07	Rocky
8PV08	Impala
8PV09	Warbler
8PV10	Guild
8PV11	Kinetic
8PV12	Behold
8PV13	Orb
8PV14	Sport
8PV15	Utopia
8PV16	True
8PV17	Galore
8PV18	Parsley
8PV19	Dare
8PV20	Branzino
8PV21	Network
8PV22	Standard
8PV23	Salamander
8PV24	Oscillate

Milaner - Geiger Textile

Ancillary
55” wide
56% wool, 10% acrylic
10% alpaca, 10% cotton
8% nylon, 6% rayon

17101	Linen
17102	Flax
17103	Bark
17104	Deep Navy
17105	Charcoal
17106	Medium Grey
17107	Ash
17108	Crimson

Panno di Dolce - Geiger Textile

Ancillary
55” wide
65% wool
20% nylon
15% alpaca

1AV01	Fog
1AV02	Dune
1AV03	Trench
1AV04	Flannel
1AV05	Charcoal
1AV06	Umber
1AV07	Deep Navy
1AV08	Graphite
1AV09	Orange
1AV10	Pink
1AV11	Deep Red
1AV12	Bright Green
1AV13	Cerulean Blue
1AV14	Deep Cerulean Blue

Pristina - Geiger Textile

Ancillary
55” wide
37% wool
25% viscose
17% acrylic
15% cotton
6% polyester
PFOA-Free stain resistant

1JC01	Dove
1JC02	Goldstone
1JC03	Daybreak
1JC04	Pumice
1JC05	Cappuccino
1JC06	Gunmetal
1JC07	Caspian
1JC08	Café Noir

Resca - Geiger Textile

Ancillary
56” wide
75% wool
10% linen
8% nylon
7% alpaca

1AW01	Fog
1AW02	Dune
1AW03	Trench
1AW04	Flannel
1AW05	Umber
1AW06	Bordeaux

Rowan - Maharam

Ancillary/Seating
77% wool
12% nylon
6% acrylic
5% linen

5K301	Kingdom
5K302	Northern
5K303	Rabbit
5K304	Elephant
5K305	Furrow
5K306	Heirloom
5K307	Appear
5K308	Repose
5K309	Blackcurrant
5K310	Courage
5K311	Bordeaux
5K312	Cherish
5K313	Brickfield
5K314	Hibiscus
5K315	Carnelian
5K316	Cinnabar
5K317	Toasted
5K318	Revea
5K319	Cortado
5K320	Medallion
5K321	Polenta

Price category 7 continued on next page

- Maharam textiles are on assigned lead times A.
- Fabric numbers are listed as Herman Miller fabric number/Maharam fabric number.

Price Category 7
continued

Rowan *continued*	
5K322	Prized
5K323	Travertine
5K324	Companion
5K325	Library
5K326	Fable
5K327	Pixie
5K328	Arboretum
5K329	Ease
5K330	Sapling
5K331	Cottonwood
5K332	Scout
5K333	Valleyside
5K334	Ornament
5K335	Zucchini
5K336	Ethereal
5K337	Springtide
5K338	Traverse
5K339	Untold
5K340	Flowing
5K341	Laguna
5K342	Cerulean
5K343	Soundscape
5K344	Message
5K345	Freefall
5K346	Musical
5K347	Puzzle
5K348	Operatic
5K349	Daydream
5K350	Shale
5K351	Forward
5K352	Anthracite

Vesture - Geiger Textile	
Ancillary	
55” wide	
40% wool, 25% polyester	
20% silk, 15% nylon	
PFOA-Free stain resistant finish	
21701	Ashen
21702	Dark Blush
21703	Dusk
21704	Medium Gray
21705	Twilight

Wool Epinglé - Geiger Textile	
Ancillary	
54” wide	
100% wool	
16201	Swiss Red
16202	Orange
16203	Light Chestnut Brown
16204	Light Burnt Umber
16205	Pale Native Umber
16207	Grey
16208	Natier Blue
16209	Deep Cerulean Blue
16210	Anthracite
16211	Natural Native Umber
16212	Chestnut Brown

Wool Tweed - Geiger Textile	
Ancillary	
54” wide	
80% wool, 20% nylon	
16601	Trench
16602	Pewter
16603	Ruby
16604	Blue Gray
16605	Navy
16606	Umber
16607	Charcoal

Price Category 8

Breeze - Maharam	
Workspaces	
120” wide	
65% FR polyester	
35% post-consumer recycled	
FR polyester	
1QG06/283817-006	Meteorite
1QG09/283817-009	Serum

Luce - Maharam	
Ancillary/Seating	
59” wide	
75% post-consumer recycled wool	
20% polyester	
5% nylon	
ZLU01/466566-001	Brioche
ZLU02/466566-002	Blanched
ZLU03/466566-003	Relic
ZLU04/466566-004	Sinter
ZLU05/466566-005	Scoria
ZLU06/466566-006	Austere
ZLU07/466566-007	Pigment
ZLU08/466566-008	Alkali
ZLU09/466566-009	Tidal
ZLU10/466566-010	Imbue
ZLU11/466566-011	Reservoir
ZLU12/466566-012	Brine
ZLU13/466566-013	Undertone
ZLU14/466566-014	Prelude
ZLU15/466566-015	Submerge
ZLU16/466566-016	Cypress
ZLU17/466566-017	Awash
ZLU18/466566-018	Adriatic
ZLU19/466566-019	Province
ZLU20/466566-020	Virescent
ZLU21/466566-021	Nettle
ZLU22/466566-022	Agrarian
ZLU23/466566-023	Serpentine
ZLU24/466566-024	Laurel
ZLU25/466566-025	Clarion
ZLU26/466566-026	Gooseberry
ZLU27/466566-027	Swelter
ZLU28/466566-028	Etruscan
ZLU29/466566-029	Coulis
ZLU30/466566-030	Rubescent

Luce *continued*	
ZLU31/466566-031	Akoya
ZLU32/466566-032	Radiant
ZLU33/466566-033	Regent
ZLU34/466566-034	Spectral
ZLU35/466566-035	Thistle

Tempo – Maharam	
Ancillary	
55” wide	
100% polyester	
Polyester backing	
26S01/466589-001	Chert
26S02/466589-002	Grandstand
26S03/466589-003	Restful
26S04/466589-004	Battleship
26S05/466589-005	Lavender
26S06/466589-006	Dockside
26S07/466589-007	Swimming
26S08/466589-008	Ambience
26S09/466589-009	Adornment
26S10/466589-010	Remedy
26S11/466589-011	Fang
26S12/466589-012	Inshore
26S13/466589-013	Camouflage
26S14/466589-014	Mesclun
26S15/466589-015	Farmland
26S16/466589-016	Tadpole
26S17/466589-017	Purr
26S18/466589-018	Snowman
26S19/466589-019	Beehive
26S20/466589-020	Gazelle
26S21/466589-021	Shiitake
26S22/466589-022	Flaxseed
26S23/466589-023	Crawdad
26S24/466589-024	Flowery
26S25/466589-025	Burgundy
26S26/466589-026	Rangoli
26S27/466589-027	Petunia
26S28/466589-028	Campsite

Price category 8 continued on next page

- Maharam textiles are on assigned lead times A.
- Fabric numbers are listed as Herman Miller fabric number/Maharam fabric number.

Price Category 8
continued

Whim	
Ancillary	
54” wide	
34% viscose	
33% acrylic	
17% wool	
8% polyester	
9DA01	Warm White
9DA02	Rye
9DA03	Mustard Seed
9DA04	Terra Cotta
9DA05	Fir
9DA06	Navy
9DA07	Pewter

Price Category 9

Alpaca Mohair - Geiger Textile	
Ancillary	
54” wide	
63% alpaca	
21% cotton, 16% polyester	
18510	Dune
18511	Trench
18512	Vicuna
18570	Sepia
18571	Umber
18580	Fog
18581	Flannel
18582	Charcoal

Campana – Maharam	
Ancillary/Seating	
59” wide	
85% wool	
15% nylon	
ZC001/466571-001	Viverine
ZC002/466571-002	Lithograph
ZC003/466571-003	Moonscape
ZC004/466571-004	Brevity
ZC005/466571-005	Linear
ZC006/466571-006	Hinterland
ZC007/466571-007	Mural
ZC008/466571-008	Sloe
ZC009/466571-009	Interstellar
ZC010/466571-010	Mythology
ZC011/466571-011	Scintillate
ZC012/466571-012	Succession
ZC013/466571-013	Visceral
ZC014/466571-014	Hemisphere
ZC015/466571-015	Troposhpere
ZC016/466571-016	Skye
ZC017/466571-017	Seaward
ZC018/466571-018	Nemorous
ZC019/466571-019	Allegory
ZC020/466571-020	Olivine
ZC021/466571-021	Reptilian
ZC022/466571-022	Basil
ZC023/466571-023	Fanleaf
ZC024/466571-024	Beachgrass
ZC025/466571-025	Hayfield

Campana *continued*	
ZC026/466571-026	Freesia
ZC027/466571-027	Rhodium
ZC028/466571-028	Undercoat
ZC029/466571-029	Airbrush
ZC030/466571-030	Shellfish
ZC031/466571-031	Mojave
ZC032/466571-032	Renaissance
ZC033/466571-033	Decoupage
ZC034/466571-034	Outback
ZC035/466571-035	Millipede

Gemma – Maharam	
Ancillary/Seating	
55” wide	
85% wool	
15% nylon	
ZGE01/466568-001	Crinoline
ZGE02/466568-002	Angelic
ZGE03/466568-003	Savory
ZGE04/466568-004	Honeycomb
ZGE05/466568-005	Gilded
ZGE06/466568-006	Paddleboat
ZGE07/466568-007	Stagecoach
ZGE08/466568-008	Waterbuck
ZGE09/466568-009	Earnest
ZGE10/466568-010	Auric
ZGE11/466568-011	Carmine
ZGE12/466568-012	Serape
ZGE13/466568-013	Ferric
ZGE14/466568-014	Canyon
ZGE15/466568-015	Alembic
ZGE16/466568-016	Patio
ZGE17/466568-017	Sorrel
ZGE18/466568-018	Root

Gemma *continued*	
ZGE19/466568-019	Mansion
ZGE20/466568-020	Buff
ZGE21/466568-021	Starch
ZGE22/466568-022	Dawn
ZGE23/466568-023	Countryside
ZGE24/466568-024	Dewy
ZGE25/466568-025	Reliquary
ZGE26/466568-026	Deluge
ZGE27/466568-027	Overlay
ZGE28/466568-028	Electron
ZGE29/466568-029	Sheath
ZGE30/466568-030	Quietude
ZGE31/466568-031	Jargon
ZGE32/466568-032	Powder
ZGE33/466568-033	Tide
ZGE34/466568-034	Outwash
ZGE35/466568-035	Enamored
ZGE36/466568-036	Smitten
ZGE37/466568-037	Revere
ZGE38/466568-038	Mangosteen
ZGE39/466568-039	Allium
ZGE40/466568-040	Immense
ZGE41/466568-041	Chamber
ZGE42/466568-042	Cosmos
ZGE43/466568-043	Inkling
ZGE44/466568-044	Rainwater
ZGE45/466568-045	Shade
ZGE46/466568-046	Pendant
ZGE47/466568-047	Axial
ZGE48/466568-048	Fervent
ZGE49/466568-049	Legacy
ZGE50/466568-050	Caliber
ZGE51/466568-051	Temple
ZGE52/466568-052	Evenfall

Price category 9 continued on next page

- Maharam textiles are on assigned lead times A.
- Fabric numbers are listed as Herman Miller fabric number/Maharam fabric number.

Price Category 9
continued

Jasper - Maharam	
Ancillary/Seating	
53” wide	
55% wool	
27% solution-dyed nylon	
18% cotton	
ZJA01/466563-001	Thrill
ZJA02/466563-002	Anise
ZJA03/466563-003	Grapefruit
ZJA04/466563-004	Lifeguard
ZJA05/466563-005	Heartfelt
ZJA06/466563-006	Corsage
ZJA07/466563-007	Earthenware
ZJA08/466563-008	Bear
ZJA09/466563-009	Firelight
ZJA10/466563-010	Dreamcatcher
ZJA11/466563-011	Bobcat
ZJA12/466563-012	Glacial
ZJA13/466563-013	Vaporize
ZJA14/466563-014	Trapdoor
ZJA15/466563-015	Halcyon
ZJA16/466563-016	Observatory
ZJA17/466563-017	Steamboat
ZJA18/466563-018	Aquathlon
ZJA19/466563-019	Cloudless
ZJA20/466563-020	Briny
ZJA21/466563-021	Magical
ZJA22/466563-022	Picnic
ZJA23/466563-023	Herbage
ZJA24/466563-024	Pasture
ZJA25/466563-025	Courtyard
ZJA26/466563-026	Leapfrog

Leather	
Ancillary/Seating	
approx. 50 sq. ft. per hide	
100% leather	
2101	Ivory
2109	Black *
2110	Smoke
2111	Graphite
2112	Khaki
2113	Rattan
2114	Truffle
2115	Alpine
2116	Haze
2117	Sable Grey
2118	Dark Mineral **
2119	Dark Carbon ***
2120	Cranberry
2121	Deep Sea

* Armpad color available on Aeron® Chair, Graphite.
** Armpad color available on Aeron Chair, Mineral.
*** Armpad color available on Aeron Chair, Carbon.

Price Category 10

Bristol Leather - Geiger Textile	
Ancillary	
approx. 55 sq. ft. per hide	
100% leather	
5-507	Black
5-511	Putty
5-519	Hunter
5-520	White
5-521	Ivory
5-522	Parchment
5-537	Caribbean
5-546	Pumice
5-547	Smoke
5-548	Charcoal
5-549	Dark Shale
5-556	Downtown Grey
5-557	City Night
5-559	Ash Grey
5-563	Champagne
5-564	Chestnut Brown
5-565	Dark Sienna
5-566	Earthen
5-567	Desert
5-568	British Green
5-579	Paris Blue
5-583	Atlantic
5-592	Camel
5-594	Taupe
5-597	Pure *
5-598	Cream
5-600	Midnight Blue
5-603	Sangria
5-604	Swiss Red
5-605	Nordic Yellow
5-606	Sky Grey
5-608	Natural

* Color not available on Saiba Chair.

Firma – Maharam	
Ancillary/Seating	
55” wide	
78% wool	
22% nylon	
3KH01/466582-001	Wrath
3KH02/466582-002	Pantomime
3KH03/466582-003	Shaded
3KH04/466582-004	Prologue
3KH05/466582-005	Framework
3KH06/466582-006	Railroad
3KH07/466582-007	Grommet
3KH08/466582-008	Lunisolar
3KH09/466582-009	Snowpack
3KH10/466582-010	Coldsnap
3KH11/466582-011	Sealift
3KH12/466582-012	Brood
3KH13/466582-013	Intertidal
3KH14/466582-014	Confide
3KH15/466582-015	Secluded
3KH16/466582-016	Leisure
3KH17/466582-017	Portfolio
3KH18/466582-018	Strato
3KH19/466582-019	Fogbow
3KH20/466582-020	Snowcone
3KH21/466582-021	Kazoo
3KH22/466582-022	Esteem
3KH23/466582-023	Mackerel
3KH24/466582-024	Brooch
3KH25/466582-025	Caesious
3KH26/466582-026	Islet
3KH27/466582-027	Biosphere
3KH28/466582-028	Hilltop
3KH29/466582-029	Arboreal
3KH30/466582-030	Lineage
3KH31/466582-031	Comfrey
3KH32/466582-032	Circe
3KH33/466582-033	Ecosystem
3KH34/466582-034	Knack
3KH35/466582-035	Watt
3KH36/466582-036	Epiphany
3KH37/466582-037	Gamma
3KH38/466582-038	Taxicab
3KH39/466582-039	Varietal
3KH40/466582-040	Tale

Price category 10 continued on next page

- Maharam textiles are on assigned lead times A.
- Fabric numbers are listed as Herman Miller fabric number/Maharam fabric number.

Price Category 10
continued

Firma *continued*	
3KH41/466582-041	Elemental
3KH42/466582-042	Cuff
3KH43/466582-043	Emu
3KH44/466582-044	Tempeh
3KH45/466582-045	Tephra
3KH46/466582-046	Shellac
3KH47/466582-047	Emporium
3KH48/466582-048	Keratin
3KH49/466582-049	Camwood
3KH50/466582-050	Gloam
3KH51/466582-051	Novela
3KH52/466582-052	Fruitpunch
3KH53/466582-053	Decant
3KH54/466582-054	Milkshake
3KH55/466582-055	Metaphysic
3KH56/466582-056	Carafe
3KH57/466582-057	Voyager
3KH58/466582-058	Tenebrous
3KH59/466582-059	Subtext
3KH60/466582-060	Silent

Gemma Multi – Maharam	
Ancillary/Seating	
55” wide	
85% wool	
15% nylon	
ZGF01/466569-001	Andromeda
ZGF02/466569-002	Dappled
ZGF03/466569-003	Lyra
ZGF04/466569-004	Flaunt
ZGF05/466569-005	Celluloid
ZGF06/466569-006	Hydrozoa
ZGF07/466569-007	Firefly
ZGF08/466569-008	Pisces
ZGF09/466569-009	Strath
ZGF10/466569-010	Erosion
ZGF11/466569-011	Cabaret
ZGF12/466569-012	Candytuft
ZGF13/466569-013	Juice
ZGF14/466569-014	Fairground
ZGF15/466569-015	Copperplate
ZGF16/466569-016	Sunbird
ZGF17/466569-017	Cinematic
ZGF18/466569-018	Clairvoyant

Gemma Multi *continued*	
ZGF19/466569-019	Crocus
ZGF20/466569-020	Memoir
ZGF21/466569-021	Roulette
ZGF22/466569-022	Voltaic
ZGF23/466569-023	Compote
ZGF24/466569-024	Lambent
ZGF25/466569-025	Twister
ZGF26/466569-026	Chronicle
ZGF27/466569-027	Sidereal
ZGF28/466569-028	Tanzanite
ZGF29/466569-029	Crystalize
ZGF30/466569-030	Chromium
ZGF31/466569-031	Pallium
ZGF32/466569-032	Spectre
ZGF33/466569-033	Courgette
ZGF34/466569-034	Viper
ZGF35/466569-035	Sunlit
ZGF36/466569-036	Heavenly
ZGF37/466569-037	Vernal
ZGF38/466569-038	Cress
ZGF39/466569-039	Limn
ZGF40/466569-040	Horseradish
ZGF41/466569-041	Shandy
ZGF42/466569-042	Granary
ZGF43/466569-043	Percolate
ZGF44/466569-044	Motor
ZGF45/466569-045	Unicorn
ZGF46/466569-046	Lobster
ZGF47/466569-047	Rhododendron
ZGF48/466569-048	Taffy
ZGF49/466569-049	Rishi
ZGF50/466569-050	Backcountry
ZGF51/466569-051	Buckthorn
ZGF52/466569-052	Coniferous
ZGF53/466569-053	Delphic
ZGF54/466569-054	Hieroglyph
ZGF55/466569-055	Eiderdown
ZGF56/466569-056	Sandbar
ZGF57/466569-057	Tanager

Gemma Multi Reverse – Maharam	
Ancillary/Seating	
55” wide	
85% wool	
15% nylon	
ZGF58/466569-101	Andromeda Reverse
ZGF59/466569-102	Dappled Reverse
ZGF60/466569-103	Lyra Reverse
ZGF61/466569-104	Flaunt Reverse
ZGF62/466569-105	Celluloid Reverse
ZGF63/466569-106	Hydrozoa Reverse
ZGF64/466569-107	Firefly Reverse
ZGF65/466569-108	Pisces Reverse
ZGF66/466569-109	Strath Reverse
ZGF67/466569-110	Erosion Reverse
ZGF68/466569-111	Cabaret Reverse
ZGF69/466569-112	Candytuft Reverse
ZGF70/466569-113	Juice Reverse
ZGF71/466569-114	Fairground Reverse
ZGF72/466569-115	Copperplate Reverse
ZGF73/466569-116	Sunbird Reverse
ZGF74/466569-117	Cinematic Reverse
ZGF75/466569-118	Clairvoyant Reverse
ZGF76/466569-119	Crocus Reverse
ZGF77/466569-120	Memoir Reverse

Gemma Multi Reverse *continued*	
ZGF78/466569-121	Roulette Reverse
ZGF79/466569-122	Voltaic Reverse
ZGF80/466569-123	Compote Reverse
ZGF81/466569-124	Lambent Reverse
ZGF82/466569-125	Twister Reverse
ZGF83/466569-126	Chronicle Reverse
ZGF84/466569-127	Sidereal Reverse
ZGF85/466569-128	Tanzanite Reverse
ZGF86/466569-129	Crystalize Reverse
ZGF87/466569-130	Chromium Reverse
ZGF88/466569-131	Pallium Reverse
ZGF89/466569-132	Spectre Reverse
ZGF90/466569-133	Courgette Reverse
ZGF91/466569-134	Viper Reverse
ZGF92/466569-135	Sunlit Reverse
ZGF93/466569-136	Heavenly Reverse
ZGF94/466569-137	Vernal Reverse
ZGF95/466569-138	Cress Reverse
ZGF96/466569-139	Limn Reverse
ZGF97/466569-140	Horseradish Reverse
ZGF98/466569-141	Shandy Reverse
ZGF99/466569-142	Granary Reverse

- Maharam textiles are on assigned lead times A.
- Fabric numbers are listed as Herman Miller fabric number/Maharam fabric number.

Price category 10 continued on next page

Price Category 10
continued

Gemma Multi Reverse *continued*	
ZGFA0/466569-143	Percolate Reverse
ZGFA1/466569-144	Motor Reverse
ZGFA2/466569-145	Unicorn Reverse
ZGFA3/466569-146	Lobster Reverse
ZGFA4/466569-147	Rhododendron Reverse
ZGFA5/466569-148	Taffy Reverse
ZGFA6/466569-149	Rishi Reverse
ZGFA7/466569-150	Backcountry Reverse
ZGFA8/466569-151	Buckthorn Reverse
ZGFA9/466569-152	Coniferous Reverse
ZGFB0/466569-153	Delphic Reverse
ZGFB1/466569-154	Hieroglyph Reverse
ZGFB2/466569-155	Eiderdown Reverse
ZGFB3/466569-157	Tanager Reverse

Petra - Maharam	
Ancillary/Seating	
55” wide	
70% wool	
19% linen	
11% nylon	
ZP401/466580-001	Hieroglyph
ZP402/466580-002	Interior
ZP403/466580-003	Samovar
ZP404/466580-004	Calcite
ZP405/466580-005	Silversmith
ZP406/466580-006	Rivet
ZP407/466580-007	Carpolite
ZP408/466580-008	Bonbon

Petra *continued*	
ZP409/466580-009	Dreamy
ZP410/466580-010	Bejewel
ZP411/466580-011	Sashimi
ZP412/466580-012	Spirula
ZP413/466580-013	Chalet
ZP414/466580-014	Reindeer
ZP415/466580-015	Nostalgia
ZP416/466580-016	Trove
ZP417/466580-017	Narcissus
ZP418/466580-018	Yurt
ZP419/466580-019	Congee
ZP420/466580-020	Genepy
ZP421/466580-021	Herbaceous
ZP422/466580-022	Paddock
ZP423/466580-023	Precious
ZP424/466580-024	Biome
ZP425/466580-025	Tinted
ZP426/466580-026	Pelagic
ZP427/466580-027	Bluebill
ZP428/466580-028	Chicory
ZP429/466580-029	Eaglet
ZP430/466580-030	Permafrost
ZP431/466580-031	Atlantic
ZP432/466580-032	Airstream
ZP433/466580-033	Debonair

Superweave - Maharam	
Ancillary	
54” wide	
75% polyester	
25% cotton	
Z2203/466241-005	Sienna
Z2204/466241-002	Ochre
Z2207/466241-004	Marine
Z2208/466241-003	Olive
Z2220/466241-001	Orange and Pink

Price Category 11

Felix - Maharam	
Ancillary/Seating	
85% wool	
15% nylon	
3BS01	Angular
3BS02	Shark
3BS03	Easy
3BS04	Cue
3BS05	Rye
3BS06	Champion
3BS07	Between
3BS08	Propose
3BS09	Rising
3BS10	Tile
3BS11	Place
3BS12	Kernel
3BS13	Pinnacle
3BS14	Darling
3BS15	Seasonal
3BS16	Shipmate
3BS17	Jump
3BS18	Geyser
3BS19	Team

Prone Leather - Maharam	
Ancillary	
approx. 50 sq. ft. per hide	
100% leather	
protective top coat	
1NX01/700020-001	Lotus
1NX02/700020-002	Timbre
1NX03/700020-003	Essence
1NX04/700020-004	Script
1NX05/700020-005	Gambit
1NX06/700020-006	Obsidian
1NX07/700020-007	Sail
1NX09/700020-009	Vine
1NX10/700020-010	Yarrow
1NX13/700020-013	Balsa
1NX14/700020-014	Shore
1NX15/700020-015	Bricolage
1NX17/700020-017	Ledge
1NX19/700020-019	Mantra
1NX20/700020-020	Java
1NX21/700020-021	Lute
1NX22/700020-022	Glow
1NX23/700020-023	Hickory

Tenera Leather - Geiger Textile	
Ancillary	
approx. 55 sq. ft. per hide	
100% leather	
17501	Cement
17502	Marzipan
17504	Raw Sienna
17505	Maple
17508	Cranberry
17510	Dark Chocolate
17511	Black
17512	Carbon
17513	Sapphire

- Maharam textiles are on assigned lead times A.
- Fabric numbers are listed as Herman Miller fabric number/Maharam fabric number.

Price Category 12-13

No fabrics available at this time.

Price Category 14

Lanalux - Maharam	
Ancillary	
54” wide	
100% wool	
Z1375/466240-005	Black/White
Z1378/466240-006	Olive/Black
Z1380/466240-001	Natural
Z1383/466240-002	Umber
Z1384/466240-007	Natural/Black
Z1386/466240-003	Orange
Z1387/466240-004	Crimson

Price Category A

No fabrics available at this time.

Price Category B

Medium – Maharam	
Ancillary/Seating/Workspaces	
54” wide	
100% polyester	
VM01/463490-001	Raven
VM02/463490-002	Smoke
VM03/463490-003	Alloy
VM04/463490-004	Flax
VM07/463490-007	Espresso
VM14/463490-014	Laser
VM16/463490-016	Port
VM22/463490-022	Marina
VM29/463490-029	Pistachio
VM32/463490-032	Prospect
VM36/463490-036	Delight
VM39/463490-039	Nautical
VM40/463490-040	Pool
VM44/463490-044	Washed
VM45/463490-045	Sculpture
VM46/463490-046	Thatched
VM47/463490-047	Hike
VM48/463490-048	Tangle
VM49/463490-049	Pacific
VM50/463490-050	Cosmic
VM51/463490-051	Cascade
VM52/463490-052	Blackberry
VM53/463490-053	Nasturtium

Messenger – Maharam	
Ancillary/Seating/Workspaces	
54” wide	
78% post-industrial recycled polyester	
15% polyester, 7% nylon	
TI07/458640-007	Shadow
TI08/458640-008	Bayou *
TI24/458640-024	Poppy
TI25/458640-025	Mao
TI29/458640-029	Onyx *
TI31/458640-031	Cloud *
TI38/458640-038	Depth *
TI40/458640-040	Nile *
TI41/458640-041	Azure *

Price category B continued on next page

- Maharam textiles are on assigned lead times A.
- Fabric numbers are listed as Herman Miller fabric number/Maharam fabric number.

Price Category B
continued

Messenger *continued*	
TI45/458640-045	Cactus *
TI46/458640-046	Ice * **
TI48/458640-048	Neon
TI50/458640-050	Hydrangea
TI53/458640-053	Tangelo
TI54/458640-054	Lumine *
TI58/458640-058	Snow ** ***
TI60/458640-060	Peridot
TI61/458640-061	Capri *
TI62/458640-062	Ultramarine
TI63/458640-063	Squall
TI66/458640-066	Cassis
TI67/458640-067	Aster
TI69/458640-069	Cherry
TI70/458640-070	Vibrant
TI71/458640-071	Satsuma *
TI72/458640-072	Maize
TI76/458640-076	Fossil
TI77/458640-077	Ash
TI78/458640-078	Tusk
TI79/458640-079	Oyster **
TI81/458640-081	Husk
TI84/458640-084	Robust
TI85/458640-085	Beyond
TI86/458640-086	Voyage *
TI87/458640-087	Everglade
TI89/458640-089	Blanch ***
TI90/458640-090	Longspur
TI91/458640-091	Vireo
TI92/458640-092	Dipper
TI93/458640-093	Gale
TI94/458640-094	Hunter
TI95/458640-095	Lime
TI96/458640-096	Apple
TI97/458640-097	Krill
TI98/458640-098	Catalyst

* Colors available on 20-day lead time.
** Colors not available on Eames Molded Fiberglass and Molded Plastic Side Chairs.
*** Colors not available on Valor Seating.

Price Category C

Manner - Maharam	
Ancillary/Seating/Workspaces	
54” wide	
65% post-industrial	
recycled polyester	
35% post-consumer	
recycled polyester	
Z2701/466177-001	Magic
Z2702/466177-002	Carob
Z2703/466177-003	Porpoise
Z2704/466177-004	Flint
Z2705/466177-005	Hush *
Z2706/466177-006	Nuance
Z2711/466177-011	Ember
Z2712/466177-012	Wagon
Z2713/466177-013	Ablaze
Z2714/466177-014	Peel
Z2716/466177-016	Butterscotch
Z2717/466177-017	Harvest
Z2720/466177-020	Parakeet
Z2722/466177-022	Aquatic
Z2723/466177-023	Cottage
Z2724/466177-024	Dahlia
Z2725/466177-025	Vivid
Z2726/466177-026	Basin
Z2727/466177-027	Schooner
Z2728/466177-028	Slope
Z2729/466177-029	Silverpoint
Z2730/466177-030	Lattice
Z2731/466177-031	Smoky
Z2732/466177-032	Magnetic
Z2733/466177-033	Woad
Z2734/466177-034	Resolute
Z2735/466177-035	Cruise
Z2736/466177-036	Atmospheric
Z2737/466177-037	Cloudburst
Z2738/466177-038	Tidewater
Z2739/466177-039	Firth
Z2740/466177-040	Oceanside
Z2741/466177-041	Grandeur
Z2742/466177-042	Comfort
Z2743/466177-043	Dill
Z2744/466177-044	Poplar
Z2745/466177-045	Citronella
Z2746/466177-046	Passerine

Manner *continued*	
Z2747/466177-047	Southwest
Z2748/466177-048	Roseate
Z2749/466177-049	Charisma
Z2750/466177-050	Siltstone
Z2751/466177-051	Kimono
Z2752/466177-052	Valiant
Z2753/466177-053	Baroness

* Color not available on Eames Aluminum Group, Executive Chairs, Upholstered Molded Plywood Chairs, and Sofa Compact.

Merit - Maharam	
Ancillary/Seating	
54” wide	
76% post-industrial	
recycled polyester	
24% polyester	
PFOA-Free stain resistant	
88Z01/466444-001	Trickle
88Z02/466444-002	Beluga
88Z03/466444-003	Gunmetal
88Z04/466444-004	Blackout
88Z05/466444-005	Superior
88Z06/466444-006	Ocean
88Z07/466444-007	Highborn
88Z08/466444-008	Immersed
88Z09/466444-009	Rainfall
88Z10/466444-010	Blizzard
88Z11/466444-011	Poolside
88Z12/466444-012	Steel
88Z13/466444-013	Zircon
88Z14/466444-014	Ripple
88Z15/466444-015	Aegean
88Z16/466444-016	Armada
88Z17/466444-017	Hedera
88Z18/466444-018	Rainforest
88Z19/466444-019	Gator
88Z20/466444-020	Vineyard
88Z21/466444-021	Pine
88Z22/466444-022	Kiwi
88Z23/466444-023	Kookaburra

Merit *continued*	
88Z24/466444-024	Bellini
88Z25/466444-025	Sunflower
88Z26/466444-026	Sandstorm
88Z27/466444-027	Mudder
88Z28/466444-028	Lynx
88Z29/466444-029	Farro
88Z30/466444-030	Manila
88Z31/466444-031	Starfish
88Z32/466444-032	Brass
88Z33/466444-033	Arrow
88Z34/466444-034	Gelato
88Z35/466444-035	Nectarine
88Z36/466444-036	Macaron
88Z37/466444-037	Alert
88Z38/466444-038	Goji
88Z39/466444-039	Cabernet
88Z40/466444-040	Eggplant
88Z41/466444-041	Hawk
88Z42/466444-042	Stag
88Z43/466444-043	Overcast

Metric – Maharam	
Ancillary/Seating/Workspaces	
54” wide	
51% post-industrial	
recycled polyester	
49% polyester	
Z302/466014-002	Fog
Z303/466014-003	Fleece
Z312/466014-012	Cardinal
Z313/466014-013	Lava
Z318/466014-018	Pollen
Z320/466014-020	Alligator
Z323/466014-023	Tar
Z324/466014-024	Anchor
Z326/466014-026	Admiral
Z327/466014-027	Seaport
Z328/466014-028	Scuba
Z329/466014-029	Skate
Z330/466014-030	Hopscotch
Z331/466014-031	Film
Z332/466014-032	Whale
Z333/466014-033	Downpour
Z334/466014-034	Midday

Price category C continued on next page

- Maharam textiles are on assigned lead times A.
- Fabric numbers are listed as Herman Miller fabric number/Maharam fabric number.

Price Category C
continued

Metric *continued*	
Z335/466014-035	Talisman
Z336/466014-036	Hedgerow
Z337/466014-037	Snorkel
Z338/466014-038	Highway
Z339/466014-039	Canary
Z340/466014-040	Sunny
Z341/466014-041	Aztec
Z342/466014-042	Fruit
Z343/466014-043	Galah
Z344/466014-044	Kiln
Z345/466014-045	Moth

Murmur - Maharam	
Ancillary/Seating	
55” wide	
100% polyester	
PFOA-Free stain resistant	
8EY01/466446-001	Gust
8EY02/466446-002	Harmonica
8EY03/466446-003	Canopy
8EY04/466446-004	Dim
8EY05/466446-005	Peppercorn
8EY06/466446-006	Cauldron
8EY07/466446-007	Conquer
8EY08/466446-008	Rapids
8EY09/466446-009	Seawater
8EY10/466446-010	Baby
8EY11/466446-011	Elderberry
8EY12/466446-012	Iceberg
8EY13/466446-013	Tallgrass
8EY14/466446-014	Underground
8EY15/466446-015	Biome
8EY16/466446-016	Cask
8EY17/466446-017	Argan
8EY18/466446-018	Sundown
8EY19/466446-019	Ignite
8EY20/466446-020	Sultry
8EY21/466446-021	Sangria

Price Category D

Bluff - Maharam	
Ancillary/Seating	
54” wide	
100% polyurethane	
Ink-resistant protective top coat	
Polyester backing	
8I801/466489-001	Loom
8I802/466489-002	Helm
8I803/466489-003	Cruller
8I804/466489-004	Folklore
8I805/466489-005	Beguile
8I806/466489-006	Sherpa
8I807/466489-007	Teleport
8I808/466489-008	Annex
8I809/466489-009	Lorimer
8I810/466489-010	Cinema
8I811/466489-011	Zip
8I812/466489-012	Coach
8I813/466489-013	Supernova
8I814/466489-014	Pirate
8I815/466489-015	Academy
8I816/466489-016	Disco
8I817/466489-017	Equator
8I818/466489-018	Brink
8I819/466489-019	Scene
8I820/466489-020	Petrichor
8I821/466489-021	Exotic
8I822/466489-022	Fauna
8I823/466489-023	Calabash
8I824/466489-024	Fuscous
8I825/466489-025	Wildling
8I826/466489-026	Blitz
8I827/466489-027	Allspice
8I828/466489-028	Lumos
8I829/466489-029	Pilot
8I830/466489-030	Jukebox
8I831/466489-031	Dugout
8I832/466489-032	Claret
8I833/466489-033	Flamenco

Mode – Maharam	
Ancillary/Seating/Workspaces	
54” wide	
80% post-consumer recycled polyester	
20% polyester	
PFOA-Free stain resistant finish	
ZMD01/466337-001	Stroll
ZMD02/466337-002	Intaglio
ZMD03/466337-003	Ominous
ZMD04/466337-004	Machine
ZMD05/466337-005	Talus
ZMD06/466337-006	Marsh
ZMD07/466337-007	Hollow
ZMD08/466337-008	Sycamore
ZMD09/466337-009	Clavicle
ZMD10/466337-010	Billygoat
ZMD11/466337-011	Spindle
ZMD12/466337-012	Lemon
ZMD13/466337-013	Oxeye
ZMD14/466337-014	Henge
ZMD15/466337-015	Goldenrod
ZMD16/466337-016	Cottontail
ZMD17/466337-017	Lioness
ZMD18/466337-018	Oriole
ZMD19/466337-019	Rust
ZMD20/466337-020	Carotene
ZMD21/466337-021	Blush
ZMD22/466337-022	Vermilion
ZMD23/466337-023	Alder
ZMD24/466337-024	Kermes
ZMD25/466337-025	Barberry
ZMD26/466337-026	Petal
ZMD27/466337-027	Valley
ZMD28/466337-028	Odyssey
ZMD29/466337-029	Ballpoint
ZMD30/466337-030	Toile
ZMD31/466337-031	Paradise

Mode *continued*	
ZMD32/466337-032	Angelfish
ZMD33/466337-033	Denim
ZMD34/466337-034	Crush
ZMD35/466337-035	Jetty
ZMD36/466337-036	Saltwater
ZMD37/466337-037	Mallard
ZMD38/466337-038	Celtic
ZMD39/466337-039	Eucalyptus
ZMD40/466337-040	Bonsai
ZMD41/466337-041	Sassafras
ZMD42/466337-042	Yucca
ZMD43/466337-043	Lichen

Spiral - Maharam	
Workspaces	
66” wide	
100% polyester	
ZS301/901882-001	Chalk
ZS303/901882-003	Wheat
ZS304/901882-004	Mica
ZS305/901882-005	Pavement
ZS306/901882-006	Graphite

- Maharam textiles are on assigned lead times A.
- Fabric numbers are listed as Herman Miller fabric number/Maharam fabric number.

Price Category E

Article – Maharam	
Ancillary/Seating	
54” wide	
100% vinyl	
ZAT08/458600-008	Marina
ZAT13/458600-013	Flume
ZAT14/458600-014	Storm
ZAT15/458600-015	Toast
ZAT19/458600-019	Fleece
ZAT22/458600-022	Stone
ZAT26/458600-026	Mercury
ZAT29/458600-029	Bluegrass
ZAT31/458600-031	Truffle
ZAT32/458600-032	Gravel
ZAT33/458600-033	Value
ZAT34/458600-034	Tint
ZAT35/458600-035	Snowflake
ZAT36/458600-036	Chalice
ZAT37/458600-037	Trail
ZAT38/458600-038	Pyramid
ZAT39/458600-039	Desert
ZAT40/458600-040	Lei
ZAT41/458600-041	Rouge
ZAT42/458600-042	Karma
ZAT43/458600-043	Opal
ZAT44/458600-044	Periwinkle
ZAT45/458600-045	Vampire
ZAT46/458600-046	Surf
ZAT47/458600-047	Plumage

Flock - Maharam	
Workspaces	
63” wide	
100% polyester	
ZF301/901892-001	Calm
ZF302/901892-002	Course
ZF303/901892-003	Highlight
ZF305/901892-005	Poppy
ZF306/901892-006	Briefcase
ZF307/901892-007	Monkstrap
ZF308/901892-008	Quag
ZF309/901892-009	Pistachio
ZF310/901892-010	Froth
ZF311/901892-011	Celadon
ZF312/901892-012	Highsea
ZF313/901892-013	China
ZF314/901892-014	Victorian
ZF315/901892-015	Commander
ZF316/901892-016	Raven
ZF317/901892-017	Aluminum

Micro – Maharam	
Ancillary	
54” wide	
100% vinyl	
ZMB01/466099-001	Muslin
ZMB04/466099-004	Basalt
ZMB06/466099-006	Phantom
ZMB07/466099-007	Depth
ZMB08/466099-008	Cottage
ZMB09/466099-009	Hunter
ZMB11/466099-011	Tomatillo
ZMB12/466099-012	Brew
ZMB14/466099-014	Tang
ZMB15/466099-015	Risk

Parallel — Maharam	
Workspaces	
66” wide	
100% recycled polyester	
TT03/901180-003	Fog
TT22/901180-022	Sterling
TT23/901180-023	Linen
TT24/901180-024	Pea
TT27/901180-027	Boulder
TT28/901180-028	Stream
TT29/901180-029	Shiitake
TT32/901180-032	Brandy
TT33/901180-033	Crater
TT36/901180-036	Quail

Price Category F

Apt – Maharam	
Ancillary/Seating	
54” wide	
100% polyurethane/silicone	
Ink-resistant protective top coat	
Polyester backing	
82T12/466392-012	Iris
82T13/466392-013	Nocturnal
82T14/466392-014	Fluid
82T15/466392-015	Eden
82T16/466392-016	Galactic
82T17/466392-017	Shoreline
82T18/466392-018	Jade
82T19/466392-019	Garden
82T20/466392-020	Botanic
82T21/466392-021	Chartreuse
82T23/466392-023	Lyric
82T24/466392-024	Turmeric
82T25/466392-025	Bengal
82T26/466392-026	Core
82T27/466392-027	Mantle
82T28/466392-028	Sorbet
82T32/466392-032	Oak
82T33/466392-033	Castle
82T34/466392-034	Follow
82T35/466392-035	Elixir
82T36/466392-036	Charm
82T37/466392-037	Descend
82T38/466392-009	Sketch
82T39/466392-010	Glacier
82T40/466392-031	Fortress
82T41/466392-030	Lotus
82T42/466392-001	Coconut
82T43/466392-011	Cobblestone
82T44/466392-029	Bloom
82T45/466392-022	Crepe
82T46/466392-006	Hickory
82T47/466392-007	Constellation
82T48/466392-008	Labyrinth
82T49/466392-002	Vibe
82T50/466392-003	Stampede
82T51/466392-004	Lumber
82T52/466392-005	Gingerbread

Price category F continued on next page

- Maharam textiles are on assigned lead times A.
- Fabric numbers are listed as Herman Miller fabric number/Maharam fabric number.

Price Category F
continued

Brindle - Maharam
Ancillary/Seating
58” wide
100% polyester
PFOA-free stain resistant
Acrylic backing

87101/466418-001	Calico
87102/466418-002	Mauve
87103/466418-003	Torch
87104/466418-004	Burnt
87105/466418-005	Barn
87106/466418-006	Pharaoh
87107/466418-007	Sandbur
87108/466418-008	Jungle
87109/466418-009	Inland
87110/466418-009	Seagrass
87111/466418-009	Watercolor
87112/466418-009	Aquarium
87113/466418-009	Drill

Chime - Maharam
Ancillary
54” wide
100% vinyl

V9M3/465350-003	Morel
V9MB/465350-011	Tranquil
V9MJ/465350-020	Slate
V9MV/465350-031	Verve
V9MW/465350-032	Understory

Conduit - Maharam
Ancillary/Seating
58” wide
100% polyester
PFOA-free stain resistant
Acrylic backing

87Z01/466428-001	Space
87Z02/466428-002	Syrup
87Z03/466428-003	Nimbus
87Z04/466428-004	Greystone
87Z05/466428-005	Fawn
87Z06/466428-006	Ghost
87Z07/466428-007	Caribbean
87Z08/466428-008	Canal
87Z09/466428-009	Bonfire

Emit – Maharam
Workspaces
54” wide
55% post-industrial recycled polyester
45% post-consumer recycled polyester
PFOA-free stain resistant

8EX01/466378-001	Wed
8EX02/466378-002	Zebra
8EX03/466378-003	Chiffon
8EX05/466378-005	Nectar
8EX06/466378-006	Elk
8EX08/466378-008	Goldenrod
8EX09/466378-009	Beached
8EX10/466378-010	Samba
8EX11/466378-011	Nest
8EX14/466378-014	Groove
8EX17/466378-017	Haiku
8EX18/466378-018	Bluefin
8EX19/466378-019	Flow
8EX20/466378-020	Xenon
8EX21/466378-021	Artem
8EX22/466378-022	Zen
8EX25/466378-025	Limeade

Instill – Maharam
Ancillary/Seating
54” wide
100% polyurethane
Ink-resistant protective top coat
Polyester backing

74M01/466351-001	Page
74M02/466351-002	Limestone
74M03/466351-003	Bobwhite
74M04/466351-004	Loafer
74M07/466351-007	Shaker
74M08/466351-008	Doe
74M09/466351-009	Ride
74M10/466351-010	Squire
74M11/466351-011	Tannin
74M12/466351-012	Vitis
74M14/466351-014	Quail
74M15/466351-015	Brittanic
74M16/466351-016	Narwhal
74M18/466351-018	Stowaway
74M19/466351-019	Koala
74M20/466351-020	Dorsal
74M21/466351-021	Stealth
74M22/466351-022	Mosey
74M23/466351-023	Beachfront
74M24/466351-024	Discovery
74M25/466351-025	Grasp
74M26/466351-026	Arboreous
74M27/466351-027	Yearling
74M28/466351-028	Allele
74M29/466351-029	Eager
74M30/466351-030	Rise
74M31/466351-031	Latte
74M32/466351-032	Compose
74M33/466351-033	Furrow
74M34/466351-034	Tenor
74M35/466351-035	Annatto
74M36/466351-036	Together
74M37/466351-037	Intention
74M38/466351-038	Overnight
74M39/466351-039	Icecap
74M40/466351-040	Metamorphic
74M41/466351-041	Anthracite

Keen - Maharam
Ancillary/Seating
54” wide
61% polyester
39% polyolefin
PFOA-Free stain resistant
Acrylic backing

89N01/466433-001	Gaur
89N02/466433-002	Lock
89N03/466433-003	Elk
89N04/466433-004	Oatmeal
89N05/466433-005	Lakefront
89N06/466433-006	Argent
89N07/466433-007	Coyote
89N08/466433-008	Eventide
89N09/466433-009	Canal
89N10/466433-010	Rosemary
89N11/466433-011	Herb
89N12/466433-012	Ruby
89N13/466433-013	Loganberry

Ledger – Maharam
Ancillary/Seating
54” wide
100% polyurethane

V9G1/463770-001	001
V9G2/463770-002	002
V9G3/463770-003	003
V9G4/463770-004	004
V9GG/463770-017	017
V9GQ/463770-025	025
V9GS/463770-026	026
V9GU/463770-028	028
V9GV/463770-029	029
V9GW/463770-030	030
V9GX/463770-031	031
V9GY/463770-032	032
V9G18/463770-042	042
V9G19/463770-043	043
V9G20/463770-044	044
V9G21/463770-045	045
V9G22/463770-046	046

Price category F continued on next page

- Maharam textiles are on assigned lead times A.
- Fabric numbers are listed as Herman Miller fabric number/Maharam fabric number.

Price Category F
continued

Loop - Maharam	
Ancillary/Seating	
57” wide	
48% post-industrial recycled polyester	
26% polyester	
26% post-consumer recycled polyester	
PFOA-Free stain resistant Acrylic Backing	
ZLL01/466469-001	Opossum
ZLL02/466469-002	Foundation
ZLL03/466469-003	Naval
ZLL04/466469-004	Buoyant
ZLL05/466469-005	Mockingbird
ZLL06/466469-006	Dynasty
ZLL07/466469-007	Zori
ZLL08/466469-008	Wildfire
ZLL09/466469-009	Floral
ZLL10/466469-010	Penguin

Multiply - Maharam	
Ancillary/Seating	
58” wide	
57% post-consumer recycled polyester	
43% post-industrial recycled polyester	
PFOA-Free stain resistant Acrylic Backing	
82A01/466341-001	Winter
82A02/466341-002	Encore
82A03/466341-003	Swing
82A04/466341-004	Contrast
82A05/466341-005	Sterling
82A06/466341-006	Daze
82A07/466341-007	Sway
82A08/466341-008	Sailor
82A09/466341-009	Mystique
82A10/466341-010	Deep
82A11/466341-011	Craft
82A12/466341-012	Town
82A13/466341-013	Limit
82A14/466341-014	Tamale

Pitch - Maharam	
Ancillary	
54” wide	
100% vinyl	
ZPC04/466186-004	Pollen
ZPC07/466186-007	Apple
ZPC11/466186-011	Voyage
ZPC12/466186-012	Turquoise
ZPC14/466186-014	Inlet
ZPC15/466186-015	Captain
ZPC16/466186-016	Aura
ZPC17/466186-017	Coastal
ZPC18/466186-018	Fog
ZPC19/466186-019	Coal
ZPC21/466186-021	Mulberry
ZPC24/466186-024	Flame
ZPC26/466186-026	Tumbleweed
ZPC29/466186-029	Subtle
ZPC30/466186-030	Buff

Pepper - Maharam	
Ancillary/Seating	
58” wide	
49% polyester	
41% post-industrial recycled polyester	
10% post-consumer recycled polyester	
PFOA-Free stain resistant Acrylic Backing	
8LW01/466486-001	Dojo
8LW02/466486-002	Marengo
8LW03/466486-003	Harlequin
8LW04/466486-004	Pavlova
8LW06/466486-006	Achiote
8LW07/466486-007	Essence
8LW08/466486-008	Genome
8LW09/466486-009	Myriad
8LW10/466486-010	Terrarium

Scuba - Maharam	
Ancillary	
54” wide	
100% polyurethane	
V9B1/464930-001	Vanilla
V9B5/464930-005	Chinchilla
V9B6/464930-006	Mahogany
V9B7/464930-007	Jet
V9B8/464930-008	Charcoal
V9B9/464930-009	Dolphin
V9BA/464930-010	Drizzle
V9BC/464930-012	Conifer
V9BD/464930-013	Bottle
V9BF/464930-015	Tourmaline
V9BG/464930-016	Sapphire
V9BH/464930-017	Electric
V9BL/464930-020	Cabernet
V9BM/464930-021	Brick
V9BN/464930-022	Coral
V9BP/464930-023	Autumn

Strum - Maharam	
Ancillary/Seating	
54” wide	
100% polyurethane with silane-based antimicrobial	
Z3301/466122-001	Overcast
Z3302/466122-002	Ridge
Z3304/466122-004	Pigeon
Z3307/466122-007	Bur
Z3308/466122-008	Abalone
Z3312/466122-012	Lemongrass

Price Category G

Compound - Maharam	
Ancillary/Seating	
54” wide	
100% polyurethane with silane-based antimicrobial	
ZC201/466196-001	Quartz
ZC203/466196-003	Weathered
ZC204/466196-004	Cliff
ZC205/466196-005	Espresso
ZC206/466196-006	Smolder
ZC207/466196-007	Blaze
ZC208/466196-008	Mandarin
ZC209/466196-009	Maple
ZC210/466196-010	Perennial
ZC211/466196-011	Mountainside
ZC212/466196-012	Tundra
ZC213/466196-013	Manatee
ZC214/466196-014	Marine
ZC215/466196-015	Twilight
ZC216/466196-016	Shelter
ZC217/466196-017	Vessel
ZC218/466196-018	Smoke
ZC219/466196-019	Fog

Fluent Crypton - Maharam	
Ancillary	
54” wide	
52% polyester	
31% post-industrial recycled polyester	
17% post-consumer recycled polyester	
ZFC01/466073-001	Lynx
ZFC12/466073-012	Bayou
ZFC13/466073-013	Bottle
ZFC14/466073-014	Cadet
ZFC22/466073-022	Turf
ZFC24/466073-024	Steady

Price category G continued on next page

- Maharam textiles are on assigned lead times A.
- Fabric numbers are listed as Herman Miller fabric number/Maharam fabric number.

Price Category G
continued

Fold - Maharam	
Seating	
54” wide	
100% polyurethane	
Polyester backing	
ZF101/466292-001	Jet
ZF102/466292-002	Chalk
ZF103/466292-003	Smoke
ZF105/466292-005	Fatigue
ZF106/466292-006	Splash
ZF107/466292-007	Apple
ZF108/466292-008	Moss
ZF110/466292-010	Midnight

Gild - Maharam	
Ancillary/Seating	
54” wide	
100% non-phthalate vinyl	
Ink-resistant protective top coat	
Polyester backing	
8AR01/466432-005	Grapevine
8AR02/466432-009	Frosting
8AR03/466432-007	Smokey
8AR04/466432-003	Skylight
8AR05/466432-011	Sandstone
8AR06/466432-004	Hurricane
8AR07/466432-002	Wreath
8AR08/466432-001	Rainforest
8AR09/466432-012	Fudge
8AR10/466432-010	Lantern
8AR11/466432-006	Planet
8AR12/466432-008	Reflection

Pare – Maharam	
Ancillary/Seating	
54” wide	
52% wool	
26% polyester	
22% nylon	
PFOA-free stain resistant finish	
ZPR01/466359-001	Polaris
ZPR04/466359-004	Fresco
ZPR06/466359-006	Wink
ZPR07/466359-007	Concord
ZPR08/466359-008	Strawberry
ZPR09/466359-009	Solar
ZPR10/466359-010	Amulet
ZPR11/466359-011	Zest
ZPR12/466359-012	Elmwood
ZPR13/466359-013	Thyme
ZPR17/466359-017	Blueberry

Runner - Maharam	
Ancillary/Seating	
54” wide	
57% post-industrial	
recycled polyester	
43% post-consumer	
recycled polyester	
ZRF01/466108-001	Bluff
ZRF03/466108-003	Grove
ZRF04/466108-004	Starboard
ZRF05/466108-005	Plot
ZRF06/466108-006	Carousel

Sudden – Maharam	
Ancillary	
54” wide	
100% polyurethane	
ZSD02/463000-002	002
ZSD03/463000-003	003
ZSD05/463000-005	005
ZSD06/463000-006	006
ZSD07/463000-007	007
ZSD08/463000-008	008
ZSD09/463000-009	009
ZSD10/463000-010	010
ZSD11/463000-011	011
ZSD13/463000-013	013
ZSD15/463000-015	015
ZSD16/463000-016	016
ZSD17/463000-017	017
ZSD18/463000-018	018
ZSD19/463000-019	019
ZSD20/463000-020	020
ZSD24/463000-024	024
ZSD27/463000-027	027
ZSD36/463000-036	036

Price Category H

Anagram - Maharam	
Ancillary	
54” wide	
42% cotton	
32% polyester	
26% nylon	
ZAN01/466067-001	Quarry
ZAN02/466067-002	Hush
ZAN03/466067-003	Electric
ZAN04/466067-004	Range
ZAN05/466067-005	Settle

Circles — Maharam	
Ancillary/Seating	
55” wide	
70% cotton	
30% polyester	
ZT01/458310-001	Khaki
ZT02/458310-002	Fatigue
ZT03/458310-003	Document
ZT04/458310-004	Engine

Dot Pattern — Maharam	
Ancillary/Seating	
55” wide	
71% cotton	
29% polyester	
ZK01/458300-001	Document
ZK02/458300-002	Taupe
ZK04/458300-004	Red
ZK05/458300-005	Navy

Mechanism – Maharam	
Ancillary	
54” wide	
100% polyester	
ZMC01/465952-001	Mercury
ZMC10/465952-010	Pearl
ZMC11/465952-011	Bronze
ZMC13/465952-013	Titanium
ZMC15/465952-015	Tangerine
ZMC17/465952-017	Sprout

Price category H continued on next page

- Maharam textiles are on assigned lead times A.
- Fabric numbers are listed as Herman Miller fabric number/Maharam fabric number.

Price Category H
continued

Mister – Maharam
Ancillary
54” wide
67% solution-dyed acrylic
33% solution-dyed polyester

ZMG01/466178-001	Breeze
ZMG04/466178-004	Enliven
ZMG05/466178-005	Notice
ZMG06/466178-006	Azurite

Regatta – Maharam
Ancillary
54” wide
65% solution-dyed acrylic
35% solution-dyed polyester

ZRT01/466189-001	Drift
ZRT02/466189-002	Parasol
ZRT04/466189-004	Swell

Small Dot Pattern — Maharam
Ancillary/Seating
55” wide
71% cotton
29% polyester

ZL01/458320-001	Document
ZL02/458320-002	Sand
ZL03/458320-003	Khaki
ZL04/458320-004	Taupe
ZL05/458320-005	Charcoal
ZL06/458320-006	Document Reverse
ZL07/458320-007	Red
ZL08/458320-008	Yellow
ZL09/458320-009	Green

Price Category I

Colorwheel – Maharam
Ancillary
54” wide
62% cotton
38% solution-dyed
post-industrial recycled nylon

ZCW02/466163-002	Pumice
ZCW03/466163-003	Viridian
ZCW06/466163-006	Charcoal
ZCW07/466163-007	Carbon

Cursive – Maharam
Ancillary/Seating
54” wide
67% solution-dyed acrylic
33% solution-dyed polyester
PFOA-Free stain resistant

7CW01/466335-001	Fast
7CW03/466335-003	Beachcomb
7CW05/466335-005	Swift
7CW07/466335-007	Inkwell
7CW08/466335-008	Rubber

Passage - Maharam
Ancillary
54” wide
100% polyester

59P01/466614-001	Mirage
59P02/466614-002	Poolside
59P03/466614-003	Cascade
59P04/466614-004	Lacinato
59P05/466614-005	Overstory
59P06/466614-006	Celadon
59P07/466614-007	Echo
59P08/466614-008	Bentonite
59P09/466614-009	Buttercup
59P10/466614-010	Maple
59P11/466614-011	Blossom
59P12/466614-012	Cloudberry
59P13/466614-013	Contessa
59P14/466614-014	Claret
59P15/466614-015	Katana

Study - Maharam
Ancillary/Seating
54” wide
73% solution-dyed acrylic
27% solution-dyed polyester

ZSY01/466269-001	001
ZSY02/466269-002	002
ZSY03/466269-003	003
ZSY04/466269-004	004
ZSY05/466269-005	005

Tracery – Maharam
Ancillary
52” wide
34% solution-dyed nylon
26% wool
21% polyester
19% cotton
acrylic backing
PFOA-free stain resistant finish

ZT501/466372-001	Birch
ZT502/466372-002	Sterling
ZT503/466372-003	Flint
ZT504/466372-004	Indigo
ZT505/466372-005	Arctic
ZT506/466372-006	Kelp
ZT507/466372-007	Melon
ZT508/466372-008	Poppy
ZT509/466372-009	Copper
ZT510/466372-010	Papaya
ZT511/466372-011	Sepia

Price Category J

Fluted Silk – Maharam
Ancillary
54” wide
85% silk
8% cotton
7% acrylic

ZFK02/465982-002	Tarnish
ZFK05/465982-005	Calm
ZFK06/465982-006	Flaxen
ZFK10/465982-010	Noticed
ZFK11/465982-011	Moody
ZFK12/465982-012	Constant
ZFK13/465982-013	Seed
ZFK14/465982-014	Eternal
ZFK15/465982-015	Honor
ZFK17/465982-017	Cranach
ZFK20/465982-020	Discreet

Mikado – Maharam
Ancillary
54” wide
79% cotton
21% polyester

V1901/459330-001	Umber
V1902/459330-002	Orange
V1903/459330-003	Ultramarine
V1904/459330-004	Pink
V1905/459330-005	Sepia

Price category J continued on next page

- Maharam textiles are on assigned lead times A.
- Fabric numbers are listed as Herman Miller fabric number/Maharam fabric number.

Price Category J
continued

Trestle - Maharam	
Ancillary	
54” wide	
36% acrylic	
32% wool	
23% cotton	
9% polyester	
3WG01/466613-001	Loam
3WG02/466613-002	Rift
3WG03/466613-003	Fuse
3WG04/466613-004	Cumulus
3WG05/466613-005	Strand
3WG06/466613-006	Pomelo
3WG07/466613-007	Tawny
3WG08/466613-008	Sunstone
3WG09/466613-009	Kindling
3WG10/466613-010	Sidecar
3WG11/466613-011	Beak
3WG12/466613-012	Ficus
3WG13/466613-013	Hinge
3WG14/466613-014	Bluefish
3WG15/466613-015	Oblivion

Price Category K

Checker – Maharam	
Ancillary	
55” wide	
77% cotton	
23% polyester	
V1201/459830-001	Emerald Light/ Ivory
V1204/459830-004	Ultramarine/ Emerald
V1206/459830-007	Sienna Dark/ Khaki
V1207/459830-008	Black/White
V1209/459830-009	Ultramarine/ Turquoise
V1210/459830-010	Blue Gray/ Emerald
V1211/459830-011	Olive/Pink
V1212/459830-012	Magenta/ Orange
V1213/459830-013	Crimson/ Orange

Checker Split – Maharam	
Ancillary	
55” wide	
77% cotton	
23% polyester	
V1301/460290-01	Black/White

Double Triangles – Maharam	
Ancillary	
55” wide	
77% cotton	
23% polyester	
V1401/459840-001	Black/White

Facets – Maharam	
Ancillary	
55” wide	
77% cotton	
23% polyester	
V1501/459850-001	Black/White

Isa – Maharam	
Ancillary	
59” wide	
85% wool	
15% nylon	
VKZ01/466624-001	Bashful
VKZ02/466624-002	Median
VKZ03/466624-003	Observe
VKZ04/466624-004	Plains
VKZ05/466624-005	Drawn
VKZ06/466624-006	Connect
VKZ07/466624-007	Fennel
VKZ08/466624-008	Skyward
VKZ09/466624-009	Oceanic
VKZ10/466624-010	Neptune
VKZ11/466624-011	Sprint
VKZ12/466624-012	Ledge
VKZ13/466624-013	Surround
VKZ14/466624-014	Foretell
VKZ15/466624-015	Lory
VKZ16/466624-016	Dear
VKZ17/466624-017	Foxtrot
VKZ18/466624-018	Sincere
VKZ19/466624-019	Begonia

Optik – Maharam	
Ancillary	
55” wide	
76% cotton	
24% polyester	
ZQP01/459960-001	Sun Yellow/ Orange
ZQP06/459960-006	White/Black

Unisol – Maharam	
Ancillary	
55” wide	
61% rayon	
21% polyester	
18% cotton	
ZUN01/461160-001	Black/ White

Price Category L

Exaggerated Plaid – Maharam	
Ancillary	
59” wide	
100% wool	
ZEP01/466039-001	Glen
ZEP02/466039-002	Brae
ZEP03/466039-003	Firth

Geometri – Maharam	
Ancillary	
55” wide	
77% cotton	
23% polyester	
ZGM02/459970-002	Red/ Carmine
ZGM03/459970-003	Lilac/Blue
ZGM04/459970-004	White/ Black

Jacobs Coat – Maharam	
Ancillary	
54” wide	
92% wool	
8% nylon	
V1601/462270-001	Multicolored Bright *
V1602/462270-002	Multicolored Neutral

* Color available on Girard Color Wheel Ottoman.

Millerstripe – Maharam	
Ancillary	
54” wide	
92% wool	
8% rayon	
V1701/462250-001	Multicolored Bright
V1702/462250-002	Multicolored Neutral

Price category L continued on next page

- Maharam textiles are on assigned lead times A.
- Fabric numbers are listed as Herman Miller fabric number/Maharam fabric number.

Price Category L
continued

Minicheck - Maharam	
Seating	
55” wide	
78% cotton	
22% polyester	
PFOA-Free stain resistant finish	
ZMK01/466268-001	Black/ White

Monk’s Wool – Maharam	
Ancillary	
54” wide	
96% wool	
4% nylon	
ZMW01/457301-001	Tusk
ZMW03/457301-003	Slate
ZMW05/457301-005	Cherokee

Pebble Wool – Maharam	
Ancillary	
54” wide	
90% wool	
10% nylon	
ZPW01/457401-001	Birch
ZPW10/457401-010	Cottage
ZPW13/457401-013	Eggshell
ZPW14/457401-014	Whisper
ZPW15/457401-015	Ceramic
ZPW16/457401-016	Seamist
ZPW17/457401-017	Armory
ZPW18/457401-018	Glaze
ZPW19/457401-019	Cordial

Pebble Wool Multi – Maharam	
Ancillary	
54” wide	
97% wool	
3% nylon	
ZPM01/461200-001	Fawn
ZPM02/461200-002	Slate
ZPM05/461200-005	Moss
ZPM06/461200-006	Tabasco

Quatrefoil – Maharam	
Ancillary	
54” wide	
75% cotton	
25% nylon	
V2101/459350-001	Silver
V2102/459350-002	Pink
V2103/459350-003	Crimson
V2104/459350-004	Emerald
V2105/459350-005	Violet

Repeat Classic Stripe – Maharam	
Ancillary	
55” wide	
47% cotton	
27% rayon	
26% polyester	
ZRS01/462170-001	Inca
ZRS02/462170-002	Pistachio
ZRS03/462170-003	Poppy
ZRS04/462170-004	Cadet
ZRS05/462170-005	Peacock

Repeat Dot Ring – Maharam	
Ancillary	
55” wide	
75% cotton	
25% polyester	
ZRR01/462150-001	Gold
ZRR04/462150-004	Pink
ZRR05/462150-005	Coral
ZRR07/462150-007	Gold Reverse
ZRR10/462150-010	Pink Reverse
ZRR11/462150-011	Coral Reverse

Stripes - Maharam	
Ancillary	
56” wide	
92% wool	
8% nylon	
ZSP01/463980-001	001
ZSP02/463980-002	002
ZSP03/463980-003	003
ZSP04/463980-004	004
ZSP05/463980-005	005
ZSP06/463980-006	006
ZSP07/463980-007	007
ZSP08/463980-008	008
ZSP09/463980-009	009
ZSP10/463980-010	010

Toostripe – Maharam	
Ancillary	
54” wide	
92% wool	
8% nylon	
V2201/462260-001	Orange Dark/ Crimson Dark
V2202/462260-002	Black/ Raw Umber
V2203/462260-003	Ochre Dark/ Sienna

Price Category M

Fruit - Maharam	
Seating	
54” wide	
55% cotton	
32% nylon	
13% post-consumer recycled polyester	
PFOA-Free stain resistant finish	
Acrylic backing	
ZF201/466262-001	Opal
ZF202/466262-002	Lime
ZF203/466262-003	Olive
ZF204/466262-004	Sky
ZF207/466262-007	Russet

Names – Maharam	
Ancillary	
55” wide	
73% cotton	
27% polyester	
V1801/462510-001	Crimson On White
V1802/462510-002	Ultramarine On White
V1803/462510-003	Black On White

Price category M continued on next page

- Maharam textiles are on assigned lead times A.
- Fabric numbers are listed as Herman Miller fabric number/Maharam fabric number.

Price Category M
continued

Ottoman Stripe – Maharam	
Ancillary	
58” wide	
92% wool	
8% nylon	
ZQN01/466142-001	Brass
ZQN02/466142-002	Cocoa
ZQN03/466142-003	Dusk
ZQN04/466142-004	Pistachio
ZQN05/466142-005	Apricot

Pressed Plaid – Maharam	
Ancillary	
54” wide	
100% wool	
T1101/466181-001	001
T1102/466181-002	002
T1103/466181-003	003
T1104/466181-004	004
T1105/466181-005	005
T1106/466181-006	006

Wool Striae – Maharam	
Ancillary	
54” wide	
100% wool	
T1201/466184-001	001
T1202/466184-002	002
T1203/466184-003	003
T1204/466184-004	004
T1205/466184-005	005
T1206/466184-006	006
T1207/466184-007	007

Price Category N

Alpaca Epinglé - Maharam	
Ancillary	
55” wide	
100% alpaca	
ZAE01/465902-001	Vellum
ZAE02/465902-002	Slate
ZAE06/465902-006	Graphite
ZAE07/465902-007	Beignet

Alpaca Velvet - Maharam	
Ancillary	
54” wide	
100% alpaca	
ZAV01/465901-001	Alpine
ZAV06/465901-006	Charcoal
ZAV07/465901-007	Pewter
ZAV08/465901-008	Squash
ZAV09/465901-009	Wallaby
ZAV10/465901-010	Brunia

Bespoke Stripe - Maharam	
Ancillary	
56” wide	
100% wool	
ZBP01/463540-001	Navy
ZBP02/463540-002	Tobacco
ZBP03/463540-003	Chocolate
ZBP04/463540-004	Charcoal
ZBP05/463540-005	Black
ZBP06/463540-006	Pewter

Herringbone Stripe - Maharam	
Ancillary	
57” wide	
100% wool	
ZKP01/465945-001	Granite
ZKP02/465945-002	Espresso
ZKP03/465945-003	Graphite
ZKP04/465945-004	Indigo
ZKP05/465945-005	Raven

Point – Maharam	
Ancillary	
53” wide	
97% rayon	
3% nylon	
ZPT01/466090-001	Ivory and Ember
ZPT02/466090-002	Black and Coral
ZPT03/466090-003	Slate and Khaki
ZPT04/466090-004	Black and Cobalt
ZPT05/466090-005	Black and Khaki
ZPT06/466090-006	Slate and Mandarin
ZPT07/466090-007	Slate and Black
ZPT08/466090-008	Brick and Greige
ZPT09/466090-009	Gold and Black
ZPT10/466090-010	Greige and Peat
ZPT11/466090-011	Peat and Mandarin
ZPT12/466090-012	Crimson
ZPT13/466090-013	Mandarin
ZPT14/466090-014	Citrus
ZPT15/466090-015	Grass
ZPT16/466090-016	Cyan
ZPT17/466090-017	Cobalt

Wool Velvet - Maharam	
Ancillary	
54” wide	
100% wool	
ZWV01/466120-001	Plush
ZWV02/466120-002	Subdue
ZWV03/466120-003	Flagstone
ZWV04/466120-004	Nori
ZWV06/466120-006	Bridle
ZWV07/466120-007	Covert
ZWV08/466120-008	Gateway

Price Category O

Bavaria Stripe – Maharam	
Ancillary	
55” wide	
77% polyester	
23% cotton	
ZBS02/466161-002	Unique

- Maharam textiles are on assigned lead times. A
- Fabric numbers are listed as Herman Miller fabric number/Maharam fabric number.

Price Category P

Big Stripe – Maharam

Ancillary
55” wide
92% wool
8% nylon

ZBR01/466174-001	Peacock
ZBR02/466174-002	Spring
ZBR03/466174-003	Umber
ZBR04/466174-004	Poppy
ZBR05/466174-005	Cobalt

Epinglé Stripe - Maharam

Ancillary
50” wide
100% cotton

ZES01/466007-001	Caramel
ZES02/466007-002	Lead
ZES03/466007-003	Violet
ZES04/466007-004	Mahogany
ZES05/466007-005	Olive

Layers Garden – Maharam

Ancillary
52” wide
96% wool
3% nylon
1% polyester

ZLY01/465916-001	Ivy/Bronze
ZLY02/465916-002	Putty/ Turquoise
ZLY03/465916-003	Pewter/ White
ZLY04/465916-004	Chocolate/ Lilac
ZLY05/465916-005	Peat/Copper

Layers Park – Maharam

Ancillary
52” wide
95% wool
3% nylon
2% polyester

ZLP01/465918-001	Ash/Snow
ZLP02/465918-002	Mineral/Sky
ZLP03/465918-003	Poppy/ Melon
ZLP04/465918-004	Indigo/ White
ZLP05/465918-005	Earth/Cobalt

Layers Vineyard Large – Maharam

Ancillary
52” wide
95% wool
3% nylon
2% polyester

ZLV01/465921-001	Ivory/Onyx
ZLV02/465921-002	Slate/Azure
ZLV03/465921-003	Loden/Sky
ZLV04/465921-004	Taupe/ Crimson
ZLV05/465921-005	Black/ Mahogany

Layers Vineyard Small – Maharam

Ancillary
52” wide
92% wool
5% polyester
3% nylon

ZLS01/465920-001	Ochre/White
ZLS02/465920-002	Scarlet/ Peony
ZLS03/465920-003	Taupe/Violet
ZLS04/465920-004	Jade/ Turquoise
ZLS05/465920-005	Ginger/Rose

Mohair Supreme - Maharam

Ancillary
54” wide
100% mohair

ZMS02/451801-072	Stonehenge
ZMS06/451801-112	Slate *
ZMS07/451801-113	Rich Chocolate *
ZMS09/451801-126	Cayenne
ZMS10/451801-127	Cognac
ZMS12/451801-129	Peat *
ZMS15/451801-133	Abyss
ZMS16/451801-134	Intrigue
ZMS18/451801-136	Lupine *
ZMS28/451801-146	League
ZMS29/451801-147	Armory *
ZMS32/451801-150	Capiz
ZMS33/451801-151	Underneath
ZMS34/451801-152	Crescent
ZMS35/451801-153	National
ZMS36/451801-154	Rooftop
ZMS37/451801-155	Skewer
ZMS38/451801-156	Party
ZMS39/451801-157	Keepsake
ZMS40/451801-158	Travel
ZMS41/451801-159	Estate
ZMS42/451801-160	Grassland
ZMS43/451801-161	Limoncello
ZMS44/451801-162	Mango
ZMS45/451801-163	Doll
ZMS46/451801-164	Carousel
ZMS47/451801-165	Palette
ZMS48/451801-166	Brandy
ZMS49/451801-167	Aristocrat
ZMS50/451801-168	Soulmate
ZMS51/451801-169	Rosette
ZMS52/451801-170	Aviator
ZMS53/451801-171	Penny

* Colors available on Eames Lounge Chair and Ottoman.

Price Category Q

A Band Apart – Maharam

Ancillary
56” wide
75% polyester
25% cotton

ZAB01/466000-001	Unique

Brushed Camel – Maharam

Ancillary
58” wide
100% baby camel hair

ZBA01/465977-001	Albino
ZBA02/465977-002	Natural

Deconstructed Rose – Maharam

Ancillary
55” wide
65% polyester
32% cotton
3% rayon

ZDS01/466086-001	Golden
ZDS02/466086-002	Vivid
ZDS03/466086-003	Earthen

Massive Paisley – Maharam

Ancillary
57” wide
76% polyester
24% cotton

ZMV01/465915-001	Ash
ZMV03/465915-003	Cardinal
ZMV06/465915-006	Night

The Firm – Maharam

Ancillary
56” wide
75% polyester
25% cotton

ZTF03/465999-003	Unique

- Maharam textiles are on assigned lead times. A
- Fabric numbers are listed as Herman Miller fabric number/Maharam fabric number.

Price Category R

Borders – Maharam
Ancillary
53” wide
98% wool
2% polyester
ZBB01/466082-001 Natural
ZBB02/466082-002 Greige
ZBB03/466082-003 Charcoal
ZBB04/466082-004 Walnut

Stow Leather - Maharam
Ancillary
approx. 50 sq. ft. per hide
100% leather
protective top coat
ZSV01/700014-001 Opera
ZSV02/700014-002 Japonica
ZSV03/700014-003 Masquerade
ZSV04/700014-004 Laguna
ZSV05/700014-005 Jettison
ZSV06/700014-006 Razor
ZSV07/700014-007 Holiday
ZSV08/700014-008 Patchouli
ZSV09/700014-009 Macrame
ZSV10/700014-010 Grace
ZSV11/700014-011 Seraphim
ZSV12/700014-012 Ricotta
ZSV13/700014-013 Neroli
ZSV14/700014-014 Sultana
ZSV15/700014-015 Sundance
ZSV16/700014-016 Quince
ZSV17/700014-017 Babka
ZSV18/700014-018 Maitake
ZSV19/700014-019 Mercer
ZSV20/700014-020 Gaucho
ZSV21/700014-021 Chia
ZSV22/700014-022 Vanguard
ZSV23/700014-023 Zone
ZSV24/700014-024 Zeppelin

Stow Leather *continued*
ZSV25/700014-025 Clandestine
ZSV26/700014-026 Raven
ZSV27/700014-027 Cabana
ZSV28/700014-028 Rime
ZSV29/700014-029 Forsythia
ZSV30/700014-030 Panthera
ZSV31/700014-031 Dune
ZSV32/700014-032 Madera
ZSV33/700014-033 Russet
ZSV34/700014-034 Gala
ZSV35/700014-035 Heron

Price Category S

Bavaria – Maharam
Ancillary
55” wide
73% polyester
27% cotton
ZBV01/466162-001 Unique

Price Category T

All Grain Leather – Edelman	
Ancillary	
approx. 50 sq. ft. per hide	
100% full-grain Aniline-dye cowhide	
VB01/AG01	Pitch Brown
VB02/AG02	White
VB03/AG03	Cloud
VB04/AG04	Shadow
VB05/AG05	Black
VB06/AG06	Baked Bean
VB07/AG07	Mildew
VB08/AG08	Soot
VB09/AG09	Blue Jeans
VB10/AG10	Merlot
VB11/AG11	Nutmeg
VB12/AG12	Butter
VB13/AG13	Cherry
VB14/AG14	Burnt Orange
VB15/AG15	Whiskey
VB17/AG17	Raw Silk
VB18/AG18	Balsa
VB19/AG19	Naturale
VB21/AG21	Greige
VB22/AG27	Latte
VB23/AG28	Coral
VB24/AG29	Rose
VB25/AG30	Zinnia
VB26/AG31	Iris
VB27/AG32	Daffodil

Hours – Maharam
Ancillary
56” wide
95% wool
3% nylon
2% rayon
ZKR01/466092-001 Day
ZKR02/466092-002 Night

- Maharam textiles are on assigned lead times. A
- Fabric numbers are listed as Herman Miller fabric number/Maharam fabric number.

Price Category U

Layers Garden Double – Maharam	
Ancillary	
52” wide	
96% wool	
3% nylon	
1% polyester	
ZLD01/465917-001	Ash/ Quartz/ Grass
ZLD02/465917-002	Earth/ Chocolate/ Coral
ZLD03/465917-003	Black/ Navy/ Cobalt

Layers Park Double – Maharam	
Ancillary	
52” wide	
96% wool	
3% nylon	
1% polyester	
ZLB01/465919-001	Mineral/ Taupe/ Lemon
ZLB02/465919-002	Sienna/ Ginger/ Rose
ZLB03/465919-003	Black/ Peat/ Copper

Price Category V-W

No fabrics available at this time.

Price Category X

Eden – Maharam	
Ancillary	
56” wide	
83% polyester	
17% cotton	
ZED01/466258-001	001
ZED02/466258-002	002
ZED03/466258-003	003
ZED04/466258-004	004
ZED05/466258-005	005

Foliage – Maharam	
Ancillary	
56” wide	
75% polyester	
25% cotton	
ZFG02/466257-002	002
ZFG04/466257-004	004
ZFG05/466257-005	005

Price Category Y

Industry – Maharam	
Ancillary	
55” wide	
80% polyester	
20% cotton	
ZND01/466255-001	001

- Maharam textiles are on assigned lead times. A
- Fabric numbers are listed as Herman Miller fabric number/Maharam fabric number.

Price Category Z

Agency – Maharam	
Ancillary	
55” wide	
75% polyester	
25% cotton	
ZAG02/466001-002	002
ZAG04/466001-004	004
ZAG05/466001-005	005
ZAG06/466001-006	006
ZAG07/466001-007	007
ZAG08/466001-008	008

Price Category 10M

Pace Leather – Maharam	
Ancillary	
approx. 50 sq. ft. per hide	
100% leather	
ZPA01/700011-001	Whisper
ZPA02/700011-002	Shy
ZPA03/700011-003	Granite
ZPA04/700011-004	Misty
ZPA05/700011-005	Studio
ZPA06/700011-006	Throne
ZPA07/700011-007	Proper
ZPA08/700011-008	Huron
ZPA09/700011-009	Darkroom
ZPA10/700011-010	Bark
ZPA11/700011-011	Raspberry
ZPA12/700011-012	Sangria
ZPA13/700011-013	Admiral
ZPA14/700011-014	Juniper
ZPA15/700011-015	Regal
ZPA16/700011-016	Vapor
ZPA17/700011-017	Valley
ZPA18/700011-018	Bushel
ZPA19/700011-019	Heirloom
ZPA20/700011-020	Palomino
ZPA21/700011-021	Bamboo
ZPA22/700011-022	Saffron
ZPA23/700011-023	Tearose
ZPA24/700011-024	Canyon
ZPA25/700011-025	Bistro
ZPA26/700011-026	Toffee
ZPA27/700011-027	Rodeo
ZPA28/700011-028	Mudslide
ZPA29/700011-029	Greige
ZPA30/700011-030	Reflection
ZPA31/700011-031	Pure
ZPA32/700011-032	Desert
ZPA33/700011-033	Griffin
ZPA34/700011-034	Urbane
ZPA35/700011-035	Woodrose

- Maharam textiles are on assigned lead times. A
- Fabric numbers are listed as Herman Miller fabric number/Maharam fabric number.

For more information about our products and services or to see a list of dealers, please visit us at HermanMiller.com or call (800) 851 1196.

© 2025 Herman Miller, Inc., Zeeland, Michigan

Distribution Rights

Working together since 1956, Herman Miller and Vitra are the authentic sources of designs by Charles and Ray Eames, Alexander Girard, and George Nelson. All the designs shown in this book are protected by law. Herman Miller has obtained all rights to make and sell these designs. Also, Herman Miller holds exclusive worldwide manufacturing and distribution rights for these products with the following exceptions:

Charles and Ray Eames, George Nelson, and Alexander Girard—Worldwide distribution rights for furniture in all areas except Europe and the Middle East. For those areas, please contact Vitra.

Isamu Noguchi—Worldwide distribution rights for the Noguchi Rudder Table. Distribution rights for the Noguchi Table in North America and Central America only. For all other areas, please contact Vitra.

Magis—Exclusive distribution rights in the US and Canada. For all other areas, please contact Magis.

® HermanMiller, ●, 3D Intelligent, 8Z Pellicle, AO, Action Office, Aeron, Aside, Bubble Lamps, Canvas Office Landscape, Caper, Celle, Cosm, Co/Struc, Daisyone, Distil, Eames, Eco-Dematerialized, Embody, Envelop, Ethospace, Exclave, Fine-Tune, FlexFront, Flo, Formcoat, Formwork, Ground Cloth, Intent, Kinemat, Layout Studio, Lino, Live Unframed, Living Office, Maharam, Meridian, Mirra, Motia, Nelson, Pari, Pellicle, Perspectives, Plex, PostureFit, PostureFit SL, Public Office Landscape, Sayl, Setu, Striad, Tu, Ubi, Verus, Wishbone, Y-Tower and Zeph are among the registered trademarks of Herman Miller, Inc., and its owned subsidiaries.

™ About Face, AireWeave, Airia, Ambit, Asari Chair by HermanMiller, Backfit, Bubbletack, Burdick Group, Butterfly Back, Canvas Vista, Cellular Suspension, Commend, Compass, Connect, DOT, Duracare, Durawrap, EnhancedAccess, Everywhere, Flex-Edge, Flute, Harmonic, Headway, Herman Miller Select, Hopsak 2, Iota, Keyless Entry, Latitude, Logic Mini, Logic Power Access Solutions, Lyris, Lyris 2, Made-to-Measure Storage, Mora, Multiscrim, Nevi, OE1, OE1 Workspace Collection, Overlay, Pixelated Support, Pronta, Renew, Sense, Soft Pad, Stackable, Stackable Storage, Swoop, Thrive, Tone, TriFlex, Twist and Wireframe are among the trademarks of Herman Miller, Inc., and its owned subsidiaries.

SM Herman Miller Options is among the service marks of Herman Miller, Inc.

AAP™ is a trademark of Extron Electronics.

Alexander Girard® is a registered trademark of The Alexander Girard Estate.

Chemsurf® is a registered trademark of Wilsonart International.

Corian® is a registered trademark of E. I. du Pont de Nemours and Company Corporation.

Crypton® is a registered trademark of Crypton, Inc.

DACRON® is a registered trademark of INVISTA S.a r.l.

Danzer® is a registered trademark of Danzer Holding AG.

Decora® is a registered trademark of Leviton Manufacturing Co., Inc.

Edelman® Leather is a registered trademark of Edelman Leather, Inc.

Extron® is a registered trademark of RGB Systems, Inc.

FENIX NTM® is a registered trademark of Arpa Industriale S.p.A.

FLEXNET™ is a trademark of Milliken & Company.

Floor Saver Glide® is a registered trademark of Carpin Manufacturing, Inc.

Forest Stewardship Council® is a registered trademark of the Forest Stewardship Council A.C. (FSC). We are FSC® certified (FSC® C102895).

FSC® is a registered trademark of the Forest Stewardship Council A.C. (FSC).

Geiger® is a registered trademark, and Bumper™, Saiba™, and Ward Bennett™ are trademarks, of Geiger International.

Hang-It-All® is a registered trademark of Lucia Eames Demetrios, d.b.a. Eames Office.

Holophane® is a registered trademark of Holophane.

Ingeo™ is a trademark of Cargill Dow LLC.

iPad® and Mac mini® are registered trademarks of Apple Inc.

Leviton® is a registered trademark of Leviton Manufacturing Co., Inc.

LifeSize® is a registered trademark of LifeSize Communications, Inc.

Lisocore® is a registered trademark of Pyrus Panels GmbH.

Logitech G® is a registered trademark of Logitech International S.A.

Magis®, Bombo®, and Me Too® are registered trademarks of Magis S.p.A.

MicrobeCare™ is a trademark of Parasol Medical LLC.

Microsoft® and Natural® Keyboard are registered trademarks of Microsoft Corporation.

Noguchi® and the Noguchi table configuration (trade dress) are registered trademarks, and Rudder Table™ is a trademark, of The Isamu Noguchi Foundation and Garden Museum.

Place Textiles® is a registered trademark of Place Textiles.

Sunbrella® is a registered trademark of Glen Raven, Inc.

SuperSeat™ is a trademark of Dahti Seating, a division of ITW.

Valor™ is among the trademarks owned by Nemschoff, Inc.