Prices effective February 3, 2025

Published March 2025

OE1 Workspace Collection™

Introduction	**page 2**
OE1 Workspace Collection™	**3**
OE1 Boundary	5
OE1 Height Adjustable Micro Packs	26
OE1 Communal Tables	49
OE1 Fixed Height Tables	75
OE1 Screens	119
OE1 Storage	127
OE1 Community Elements	144
Accessories	151
Indices	**155**
By Name	155
By Number	157
Appendices	
20-Day or Less/Assigned Lead-Time Order Information	
Keyed-Alike Information	
Customer's Own Material Order Information-Workspaces	
Textiles Application Chart-Workspaces	
Textiles Application Chart-Seating	
Textile Colors	

For the latest materials information, refer to the Materials pages on HermanMiller.com.

A Note on the Organization of This Book

There are a few signals that will help you understand the organization of this book. Once you know them, you should be able to find your way around easily.

Like a newspaper, this book is formatted with columns of text and illustrations that run vertically.

Information wraps from one column to the next and continues for as many pages as it needs to.

Black bars are clues.

A black bar at the top of a page signals the start of information about a product.

This information is divided into two sections, each signaled by a black bar. Product Information includes a description, additional notes, and dimensional drawings. Specification Information, which always begins at the top of a column, includes a series of steps. Each step represents a decision you need to make in order to complete your product number. Steps must be followed sequentially. The number of pages needed to complete information on a product varies; some will be complete in one page; others may fill three or four pages. Just continue going through the steps until you run into the next product, signaled by the black bar at the top of the page.

Black tabs running along the outside edge of the page help you locate what section you are in or what section you want to go to. You can thumb forwards or backwards to find a section; tabs and text appear on both sides of the page.

The additional pages in the back of the book include the appendices and indices. They are signaled by a long black bar running along the outside edge of the page.

The index is presented two ways.

The first index is in alphabetical order by product name. It can be helpful if you are new to the products and numbering scheme or if you are looking for a type of product, such as work chair or round table.

The second index is by product number. It lists, in alphanumeric order, the base product number, typically a five-digit number.

General Information

This book is effective February 3, 2025, subject to change without notice. Products may be purchased from authorized Herman Miller dealers who will quote prices upon request. For more information about our products and services or to see a list of dealers, visit www.HermanMiller.com.

All prices are list prices. Additional services, such as planning services, design, storage, and installation, are not included and must be added to these prices when the additional services are requested.

Illustrations, specifications, and prices are based on the latest information at the time of publication. The right is reserved to make changes at any time without notice in prices, fabrics, finishes, materials, specifications, and models, and also to discontinue models and finishes.

Dimensions shown in the drawings are engineering drawing dimensions rounded up to the nearest 1/8". Product is shipped set up or knocked down. Products that include "Shipped knocked down" in the description require some assembly. If this statement does not appear in the description, the product is shipped assembled.

Service problems are normally handled by a Herman Miller authorized dealer. Where this cannot be accomplished on a local level, service problems should be referred to the Customer Care Representative for your region, Herman Miller, Inc., Zeeland, Michigan 49464.

20-Day or Less/Assigned Lead-Time Shipments

All products and options in this price book not designated by an Assigned Program icon A will ship in **20 business days or less** after being acknowledged by Herman Miller.

Products and options designated by an A are on the assigned lead- time program and may ship in 20 days, less than 20 days, or more than 20 days from order acknowledgement.

OE1 Boundary

OE1 Height Adjustable Micro Packs

OE1 Communal Tables

OE1 Fixed Height Tables

OE1 Screens

OE1 Storage

OE1 Community Elements

OE1 Accessories

OE1 Agile Wall, Frame with Casters HZ100.

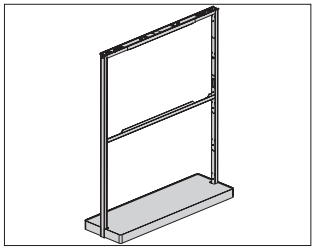

Product Information

Description

This frame holds individual tiles on both sides and accommodates lower shelving and comes on casters. Frame can adjoin to an adjacent OE1 Workspace Collection™ Agile Wall frame.

Notes

Order the following products separately:

- Upper tile (HZ130.) and lower tile (HZ140.)
- Bottom shelves (HZ150.)
- Monitor mount (HZ170.)

OE1 agile wall base finish matches frame finish.

Casters are non-locking and are concealed beneath the base.

Top alignment clip to adjoin multiple OE1 agile wall frames is included.

See planning guide for additional information.

Dimensions

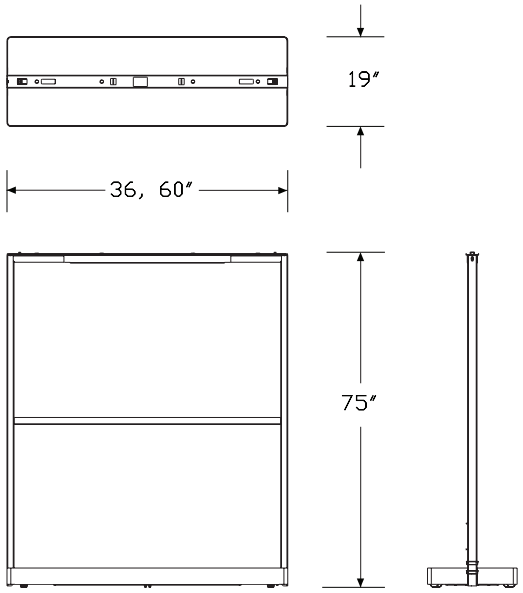

Specification Information

Step 1.

HZ100.

Step 2. Height

75	75″ high

Step 3. Width

36	36″ wide
60	60″ wide

Step 4. Frame Type

1	frame for tiles only
2	frame for tiles on top and shelving on bottom

Prices for Steps 1-4.

			1	2
HZ100.	**75**	**36**	$3070	3070
		60	$3935	3935

Step 5. Frame/Base Finish

Metallic Paint

For 36″ wide (36)

SNA	satin aluminum	+$80

Sand Texture Paint

For 36″ wide (36)

8Q	folkstone grey (CP)	+$0
91	white (CP)	+$0
98	studio white (CP)	+$0
BK	black	+$0
DB3	glacier	+$60
DN2	nightfall	+$60
DR1	canyon	+$60
OLF	olive	+$60
UBK	ultra black (CP)	+$0

Metallic Paint

For 60″ wide (60)

SNA	satin aluminum	+$120

Sand Texture Paint

For 60″ wide (60)

8Q	folkstone grey (CP)	+$0
91	white (CP)	+$0
98	studio white (CP)	+$0
BK	black	+$0
DB3	glacier	+$100
DN2	nightfall	+$100
DR1	canyon	+$100
OLF	olive	+$100
UBK	ultra black (CP)	+$0

OE1 Agile Wall, Frame with Glides HZ110.

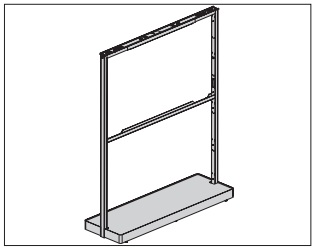

Product Information

Description

This frame holds individual tiles on both sides and accommodates lower shelving and comes on glides. Frame can adjoin to an adjacent OE1 Workspace Collection™ Agile Wall frame.

Notes

Glides provide 1½″ of leveling adjustment.

Order the following products separately:

- Upper tile (HZ130.) and lower tile (HZ140.)
- Bottom shelves (HZ150.)
- Monitor mount (HZ170.)

OE1 agile wall base finish matches frame finish.

Top alignment clip to adjoin multiple OE1 agile wall frames is included.

See planning guide for additional information.

Dimensions

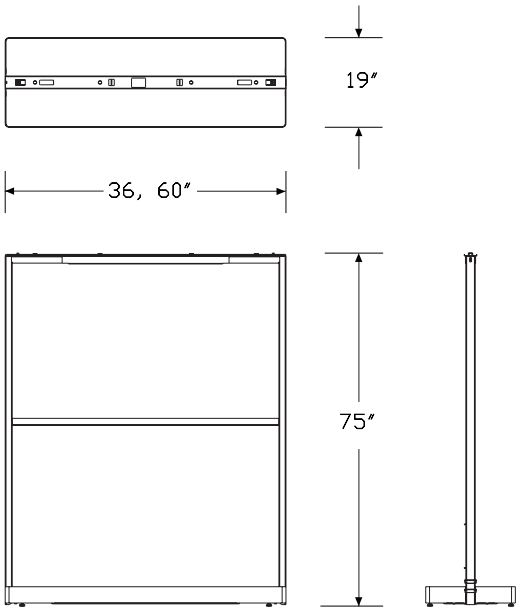

Specification Information

Step 1.

HZ110.

Step 2. Height

75	75″ high

Step 3. Width

36	36″ wide
60	60″ wide

Step 4. Frame Type

1	frame for tiles only
2	frame for tiles on top and shelving on bottom

Prices for Steps 1-4.

			1	2
HZ110.	**75**	**36**	$2930	2930
		60	$3755	3755

Step 5. Frame/Base Finish

Metallic Paint

For 36″ wide (36)

SNA	satin aluminum	+$80

Sand Texture Paint

For 36″ wide (36)

8Q	folkstone grey (CP)	+$0
91	white (CP)	+$0
98	studio white (CP)	+$0
BK	black	+$0
DB3	glacier	+$60
DN2	nightfall	+$60
DR1	canyon	+$60
OLF	olive	+$60
UBK	ultra black (CP)	+$0

Metallic Paint

For 60″ wide (60)

SNA	satin aluminum	+$120

Sand Texture Paint

For 60" wide (60)

8Q	folkstone grey (CP)	+$0
91	white (CP)	+$0
98	studio white (CP)	+$0
BK	black	+$0
DB3	glacier	+$100
DN2	nightfall	+$100
DR1	canyon	+$100
OLF	olive	+$100
UBK	ultra black (CP)	+$0

OE1 Agile Wall, Frame with Glides, for Full Height Shelves

HZ120.

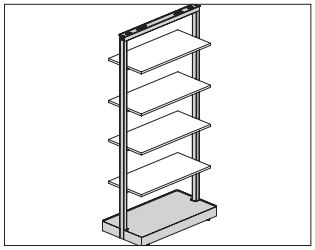

Product Information

Description

This frame accommodates full height shelving and comes on glides. Frame can adjoin to an adjacent OE1 Workspace Collection™ Agile Wall frame.

Notes

Glides provide 1½″ of leveling adjustment.

Order the following products separately:

• Full height shelves (HZ160.)

OE1 agile wall base finish matches frame finish.

Top alignment clip to adjoin multiple OE1 agile wall frames is included.

See planning guide for additional information.

Dimensions

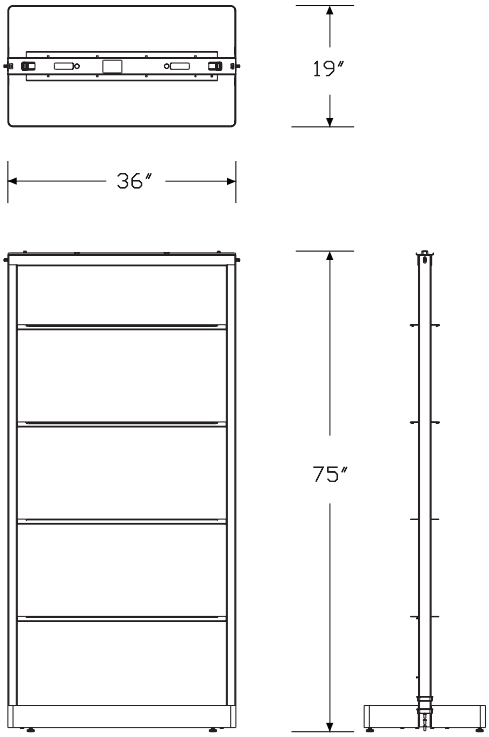

Specification Information

Step 1.

HZ120.

Step 2. Height

75	75″ high

Step 3. Width

36	36″ wide

Step 4. Frame Type

1	frame for full shelving

Prices for Steps 1-4.

	1
HZ120. 75 36	$2930

Step 5. Frame/Base Finish

Metallic Paint		
SNA	satin aluminum	+$80
Sand Texture Paint		
8Q	folkstone grey (CP)	+$0
91	white (CP)	+$0
98	studio white (CP)	+$0
BK	black	+$0
DB3	glacier	+$60
DN2	nightfall	+$60
DR1	canyon	+$60
OLF	olive	+$60
UBK	ultra black (CP)	+$0

OE1 Agile Wall, Upper Tile HZ130.

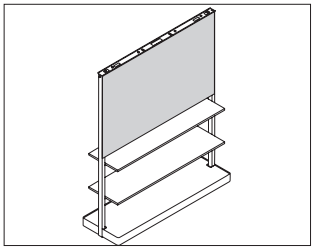

OE1 Boundary

Product Information

Description

This upper tile attaches to 1 side of a frame and is available in a tackable fabric, markerboard, laminate or veneer surface.

Notes

Specify width of tile to match width of frame.

Pair with OE1 frame with casters (HZ100.) or OE1 frame with glides (HZ110.), ordered separately.

Fabric version contains knockout for optional monitor mount. Order OE1 agile wall, monitor mount (HZ170.) separately.

When specifying tackable fabric, horizontal option (R), fabric direction is horizontal (railroaded).

Fabric-covered tile accepts Customer's Own Material (COM).

Width (Surface Material)—Yardage

36 (R)—1.23

36 (T)—1.23

60 (R)—1.95

For information on multiple quantities or nondirectional fabrics, contact COM Department. See Order Information in appendices.

See planning guide for additional information.

Dimensions

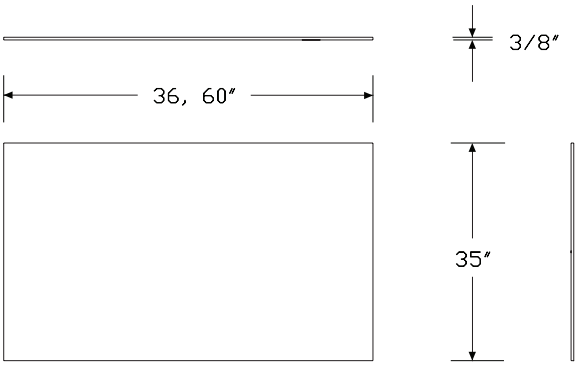

Specification Information

Step 1.

HZ130.

Step 2. Height

35 35″ high

Step 3. Width

36 36″ wide

60 60″ wide

Step 4. Surface Material

For 36″ wide (36)

T tackable fabric

R tackable fabric, horizontal

M marker board

L high-pressure laminate / thermoplastic edge

W veneer/veneer edge

For 60″ wide (60)

R tackable fabric, horizontal

M marker board

L high-pressure laminate / thermoplastic edge

W veneer/veneer edge

Prices for Steps 1-4.

			T	R	M	L	W
HZ130.	**35**	**36**	$561	571	1006	686	1233
		60	—	$856	1453	1202	2162

Step 5. Grain Direction

For high-pressure laminate / thermoplastic edge (L) or veneer/ veneer edge (W)

HRG	horizontal grain	+$0
VTG	vertical grain	+$0

Step 6. Fabric

For 36″ wide (36) with tackable fabric (T), or tackable fabric, horizontal (R)

Price Category 1	+$0
Price Category 2	+$20
Price Category 3	+$46
Price Category 4	+$78
Price Category 5	+$130
Price Category C	+$110

For 60″ wide (60) with tackable fabric, horizontal (R)	
Price Category 1	+$0
Price Category 2	+$31
Price Category 3	+$72
Price Category 4	+$122
Price Category 5	+$204
Price Category C	+$174

Step 7. Tile Finish

For high-pressure laminate / thermoplastic edge (L)		
125	natural maple (CP) A	+$0
126	natural cherry (CP) A	+$0
127	walnut (CP) A	+$0
139	light ash (CP) A	+$0
140	warm ash (CP) A	+$0
76	light brown walnut	+$0
8Q	folkstone grey (CP)	+$0
91	white (CP)	+$0
98	studio white (CP)	+$0
CL	cool grey neutral	+$0
HF	inner tone light	+$0
HP	light anigre	+$0
LBA	clear on ash (CP)	+$0
LBB	oak on ash (CP)	+$0
LBC	walnut on ash (CP)	+$0
LBF	neutral twill	+$0
LBJ	graphite twill	+$0
LBQ	white twill	+$0
LBR	phantom ecru A	+$0
LBS	phantom cocoa A	+$0
LBU	medium matte walnut (CP) A	+$0
LBV	warm grey teak A	+$0
LT	light tone	+$0
LU	soft white	+$0
UBK	ultra black (CP) A	+$0
WL	warm stone (CP)	+$0
WN	warm grey neutral	+$0
ZZ	open line high-pressure laminate (nonstandard) A	+$200

For 36″ wide (36) with veneer/veneer edge (W)		
2U	light brown walnut A	+$85
40	dark brown walnut A	+$85
CHD	noble cherry A	+$85
ET	clear on ash A	+$85
EU	oak on ash A	+$85
EV	walnut on ash A	+$85
EW	medium matte walnut A	+$85
OK	white oak A	+$85
OU	walnut A	+$85
UL	natural maple A	+$85
WHN	natural white oak A	+$85

For 60″ wide (60) with veneer/veneer edge (W)		
2U	light brown walnut A	+$85
40	dark brown walnut A	+$85
CHD	noble cherry A	+$85
ET	clear on ash A	+$85
EU	oak on ash A	+$85
EV	walnut on ash A	+$85
EW	medium matte walnut A	+$85
OK	white oak A	+$85
OU	walnut A	+$85
UL	natural maple A	+$85
WHN	natural white oak A	+$85

Step 8. Edge Finish		
For high-pressure laminate / thermoplastic edge (L)		
125	natural maple (CP)	+$0
126	natural cherry (CP)	+$0
127	walnut (CP)	+$0
139	light ash (CP)	+$0
140	warm ash (CP)	+$0
76	light brown walnut	+$0
8Q	folkstone grey (CP)	+$0
91	white (CP)	+$0
98	studio white (CP)	+$0
CL	cool grey neutral	+$0
HF	inner tone light	+$0
HP	light anigre	+$0
LBA	clear on ash (CP)	+$0
LBB	oak on ash (CP)	+$0
LBC	walnut on ash (CP)	+$0
LBF	neutral twill	+$0
LBJ	graphite twill	+$0
LBQ	white twill	+$0
LBR	phantom ecru	+$0
LBS	phantom cocoa	+$0
LBU	medium matte walnut (CP)	+$0
LBV	warm grey teak	+$0
LU	soft white	+$0
UBK	ultra black (CP)	+$0
WL	warm stone (CP)	+$0
WN	warm grey neutral	+$0

Step 9. Markerboard Tray Finish		
For marker board (M)		

Metallic Paint		
SNA	satin aluminum	+$10

Smooth Paint		
8Q	folkstone grey (CP)	+$0
DB3	glacier	+$8
DN2	nightfall	+$8
DR1	canyon	+$8
OLF	olive	+$8
BK	black	+$0
UBK	ultra black (CP)	+$0

OE1 Agile Wall, Lower Tile HZ140.

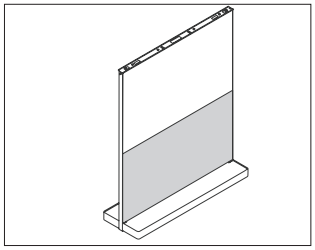

Product Information

Description

This lower tile attaches to 1 side of a frame and is available in a tackable fabric, laminate or veneer surface.

Notes

Specify width of tile to match width of frame.

Pair with OE1 frame with casters (HZ100.) or OE1 frame with glides (HZ110.), ordered separately.

For user power access, specify tackable fabric, horizontal, with power (RP) option. Order OE1 agile wall, monitor mount (HZ170.) separately.

The user power module option is only available as part of the monitor mount specification.

When specifying tackable fabric, horizontal option (R), fabric direction is horizontal (railroaded).

Fabric-covered tile accepts Customer's Own Material (COM).

Width (Surface Material)—Yardage

36 (R)—1.23

36 (T)—1.23

60 (R)—1.95

For information on multiple quantities or nondirectional fabrics, contact COM Department. See Order Information in appendices.

See planning guide for additional information.

Dimensions

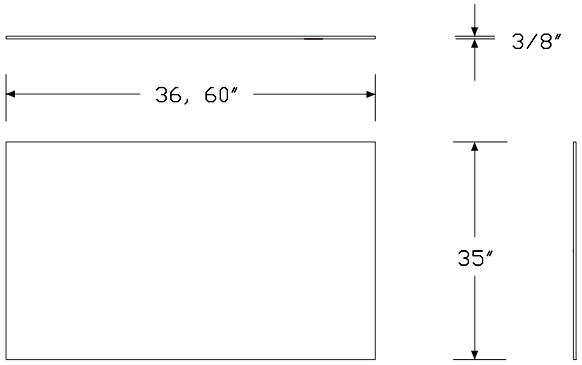

Specification Information

Step 1.

HZ140.

Step 2. Height

35 35″ high

Step 3. Width

36 36″ wide

60 60″ wide

Step 4. Surface Material

For 36″ wide (36)

TN tackable fabric without power

RN tackable fabric, horizontal, without power

LN high-pressure laminate/thermoplatic edge without power

WN veneer/veneer edge without power

For 60″ wide (60)

RN tackable fabric, horizontal, without power

RP tackable fabric, horizontal, with power

LN high-pressure laminate/thermoplatic edge without power

WN veneer/veneer edge without power

Prices for Steps 1-4.

		TN	RN	RP	LN	WN
HZ140. 35	**36**	$561	571	—	686	1233
	60	—	$856	856	1202	2162

Step 5. Grain Direction

For high-pressure laminate/thermoplatic edge without power (LN) or veneer/veneer edge without power (WN)

HRG	horizontal grain	+$0
VTG	vertical grain	+$0

Step 6. Fabric

For 36″ wide (36) with tackable fabric without power (TN), or tackable fabric, horizontal, without power (RN)

Price Category 1	+$0
Price Category 2	+$20
Price Category 3	+$46
Price Category 4	+$78
Price Category 5	+$130
Price Category C	+$110

For 60" wide (60) with tackable fabric, horizontal, without power (RN), or tackable fabric, horizontal, with power (RP)

Price Category 1	+$0
Price Category 2	+$31
Price Category 3	+$72
Price Category 4	+$122
Price Category 5	+$204
Price Category C	+$174

Step 7. Tile Finish

For high-pressure laminate/thermoplatic edge without power (LN)

125	natural maple (CP) A	+$0
126	natural cherry (CP) A	+$0
127	walnut (CP) A	+$0
139	light ash (CP) A	+$0
140	warm ash (CP) A	+$0
76	light brown walnut	+$0
8Q	folkstone grey (CP)	+$0
91	white (CP)	+$0
98	studio white (CP)	+$0
CL	cool grey neutral	+$0
HF	inner tone light	+$0
HP	light anigre	+$0
LBA	clear on ash (CP)	+$0
LBB	oak on ash (CP)	+$0
LBC	walnut on ash (CP)	+$0
LBF	neutral twill	+$0
LBJ	graphite twill	+$0
LBQ	white twill	+$0
LBR	phantom ecru A	+$0
LBS	phantom cocoa A	+$0
LBU	medium matte walnut (CP) A	+$0
LBV	warm grey teak A	+$0
LT	light tone	+$0
LU	soft white	+$0
UBK	ultra black (CP) A	+$0
WL	warm stone (CP)	+$0
WN	warm grey neutral	+$0
ZZ	open line high-pressure laminate (nonstandard) A	+$200

For 36" wide (36) with veneer/veneer edge without power (WN)

2U	light brown walnut A	+$85
40	dark brown walnut A	+$85
CHD	noble cherry A	+$85
ET	clear on ash A	+$85
EU	oak on ash A	+$85
EV	walnut on ash A	+$85
EW	medium matte walnut A	+$85
OK	white oak A	+$85
OU	walnut A	+$85
UL	natural maple A	+$85
WHN	natural white oak A	+$85

For 60" wide (60) with veneer/veneer edge without power (WN)

2U	light brown walnut A	+$85
40	dark brown walnut A	+$85
CHD	noble cherry A	+$85
ET	clear on ash A	+$85
EU	oak on ash A	+$85
EV	walnut on ash A	+$85
EW	medium matte walnut A	+$85
OK	white oak A	+$85
OU	walnut A	+$85
UL	natural maple A	+$85
WHN	natural white oak A	+$85

Step 8. Edge Finish *For high-pressure laminate/thermoplatic edge without power (LN)*		
125	natural maple (CP)	+$0
126	natural cherry (CP)	+$0
127	walnut (CP)	+$0
139	light ash (CP)	+$0
140	warm ash (CP)	+$0
76	light brown walnut	+$0
8Q	folkstone grey (CP)	+$0
91	white (CP)	+$0
98	studio white (CP)	+$0
CL	cool grey neutral	+$0
HF	inner tone light	+$0
HP	light anigre	+$0
LBA	clear on ash (CP)	+$0
LBB	oak on ash (CP)	+$0
LBC	walnut on ash (CP)	+$0
LBF	neutral twill	+$0
LBJ	graphite twill	+$0
LBQ	white twill	+$0
LBR	phantom ecru	+$0
LBS	phantom cocoa	+$0
LBU	medium matte walnut (CP)	+$0
LBV	warm grey teak	+$0
LU	soft white	+$0
UBK	ultra black (CP)	+$0
WL	warm stone (CP)	+$0
WN	warm grey neutral	+$0

OE1 Agile Wall, Bottom Shelves HZ150.

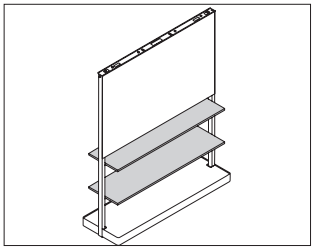

Product Information

Description

These lower shelves pair with an OE1 Workspace Collection™ Agile Wall frame and are available in laminate or veneer. Package quantity is 2 shelves.

Notes

Pair with OE1 frame with casters (HZ100.) or OE1 frame with glides (HZ110.), ordered separately.

2 shelves are included.

Grain direction runs horizontally on the shelf.

See planning guide for additional information.

Dimensions

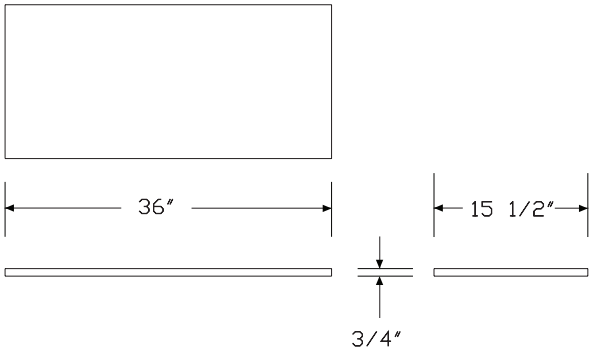

Specification Information

Step 1.

HZ150.

Step 2. Width

36	36″ wide
60	60″ wide

Step 3. Shelf Material

L	high-pressure laminate/thermoplastic edge
W	veneer/veneer edge

Prices for Steps 1-3.

		L	W
HZ150.	**36**	$519	1295
	60	$664	1654

Step 4. Shelf Finish

For high-pressure laminate/thermoplastic edge (L)

125	natural maple (CP)	+$0
126	natural cherry (CP)	+$0
127	walnut (CP)	+$0
139	light ash (CP)	+$0
140	warm ash (CP)	+$0
76	light brown walnut	+$0
8Q	folkstone grey (CP)	+$0
91	white (CP)	+$0
98	studio white (CP)	+$0
CL	cool grey neutral	+$0
G1	graphite (CP)	+$0
HP	light anigre	+$0
LBA	clear on ash (CP)	+$0
LBB	oak on ash (CP)	+$0
LBC	walnut on ash (CP)	+$0
LBF	neutral twill	+$0
LBJ	graphite twill	+$0
LBQ	white twill	+$0
LBR	phantom ecru	+$0
LBS	phantom cocoa	+$0
LBU	medium matte walnut (CP)	+$0
LBV	warm grey teak	+$0
LU	soft white	+$0
WL	warm stone (CP)	+$0
WN	warm grey neutral	+$0

For 36″ wide (36) with veneer/veneer edge (W)

2U	light brown walnut A	+$85
40	dark brown walnut A	+$85
CHD	noble cherry	+$85
ET	clear on ash A	+$85
EU	oak on ash A	+$85
EV	walnut on ash A	+$85
EW	medium matte walnut A	+$85
OK	white oak	+$85
OU	walnut A	+$85
UL	natural maple A	+$85
WHN	natural white oak	+$85

For 60″ wide (60) with veneer/veneer edge (W)

2U	light brown walnut A	+$85
40	dark brown walnut A	+$85
CHD	noble cherry	+$85
ET	clear on ash A	+$85
EU	oak on ash A	+$85
EV	walnut on ash A	+$85
EW	medium matte walnut A	+$85
OK	white oak	+$85
OU	walnut A	+$85
UL	natural maple A	+$85
WHN	natural white oak	+$85

Step 5. Edge Finish

For high-pressure laminate/thermoplastic edge (L)

125	natural maple (CP)	+$0
126	natural cherry (CP)	+$0
127	walnut (CP)	+$0
139	light ash (CP)	+$0
140	warm ash (CP)	+$0
76	light brown walnut	+$0
8Q	folkstone grey (CP)	+$0
91	white (CP)	+$0
98	studio white (CP)	+$0
CL	cool grey neutral	+$0
G1	graphite (CP)	+$0
HF	inner tone light	+$0
HP	light anigre	+$0
LBA	clear on ash (CP)	+$0
LBB	oak on ash (CP)	+$0
LBC	walnut on ash (CP)	+$0
LBF	neutral twill	+$0
LBJ	graphite twill	+$0
LBQ	white twill	+$0
LBR	phantom ecru	+$0
LBS	phantom cocoa	+$0
LBU	medium matte walnut (CP)	+$0
LBV	warm grey teak	+$0
LU	soft white	+$0
UBK	ultra black (CP)	+$0
WL	warm stone (CP)	+$0
WN	warm grey neutral	+$0

OE1 Agile Wall, Full Height Shelves HZ160.

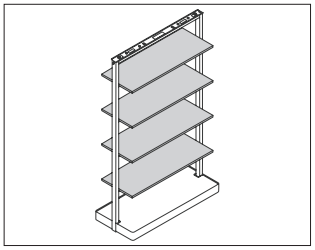

OE1 Boundary

Product Information

Description

These full height shelves pair with the OE1 Workspace Collection™ Agile Wall frame for full height shelves and are available in laminate or veneer. Package quantity is 4 shelves.

Notes

Pair with OE1 frame for full height shelves (HZ120.), ordered separately.

4 shelves are included.

Grain direction runs horizontally on the shelf.

See planning guide for additional information.

Dimensions

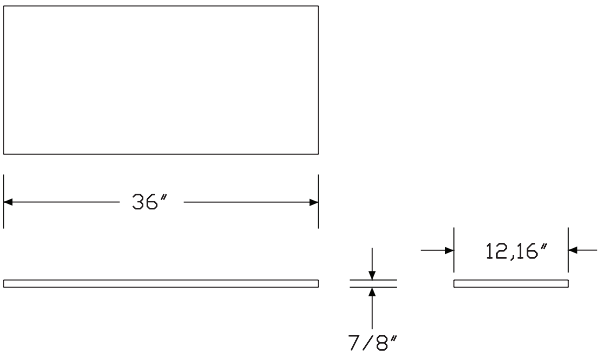

Specification Information

Step 1.

HZ160.

Step 2. Width

36	36″ wide

Step 3. Shelf Material

L	high-pressure laminate/thermoplastic edge
W	veneer/veneer edge

Prices for Steps 1-3.

	L	W
HZ160. 36	$1151	2873

Step 4. Shelf Finish

For high-pressure laminate/thermoplastic edge (L)

125	natural maple (CP)	+$0
126	natural cherry (CP)	+$0
127	walnut (CP)	+$0
139	light ash (CP)	+$0
140	warm ash (CP)	+$0
76	light brown walnut	+$0
8Q	folkstone grey (CP)	+$0
91	white (CP)	+$0
98	studio white (CP)	+$0
CL	cool grey neutral	+$0
G1	graphite (CP)	+$0
HP	light anigre	+$0
LBA	clear on ash (CP)	+$0
LBB	oak on ash (CP)	+$0
LBC	walnut on ash (CP)	+$0
LBF	neutral twill	+$0
LBJ	graphite twill	+$0
LBQ	white twill	+$0
LBR	phantom ecru	+$0
LBS	phantom cocoa	+$0
LBU	medium matte walnut (CP)	+$0
LBV	warm grey teak	+$0
LU	soft white	+$0
WL	warm stone (CP)	+$0
WN	warm grey neutral	+$0

For 36" wide (36) with veneer/veneer edge (W)		
2U	light brown walnut A	+$85
40	dark brown walnut A	+$85
CHD	noble cherry	+$85
ET	clear on ash A	+$85
EU	oak on ash A	+$85
EV	walnut on ash A	+$85
EW	medium matte walnut A	+$85
OK	white oak	+$85
OU	walnut A	+$85
UL	natural maple A	+$85
WHN	natural white oak	+$85

Step 5. Edge Finish *For high-pressure laminate/thermoplastic edge (L)*		
125	natural maple (CP)	+$0
126	natural cherry (CP)	+$0
127	walnut (CP)	+$0
139	light ash (CP)	+$0
140	warm ash (CP)	+$0
76	light brown walnut	+$0
8Q	folkstone grey (CP)	+$0
91	white (CP)	+$0
98	studio white (CP)	+$0
CL	cool grey neutral	+$0
G1	graphite (CP)	+$0
HF	inner tone light	+$0
HP	light anigre	+$0
LBA	clear on ash (CP)	+$0
LBB	oak on ash (CP)	+$0
LBC	walnut on ash (CP)	+$0
LBF	neutral twill	+$0
LBJ	graphite twill	+$0
LBQ	white twill	+$0
LBR	phantom ecru	+$0
LBS	phantom cocoa	+$0
LBU	medium matte walnut (CP)	+$0
LBV	warm grey teak	+$0
LU	soft white	+$0
UBK	ultra black (CP)	+$0
WL	warm stone (CP)	+$0
WN	warm grey neutral	+$0

OE1 Agile Wall, Monitor Mount HZ170.

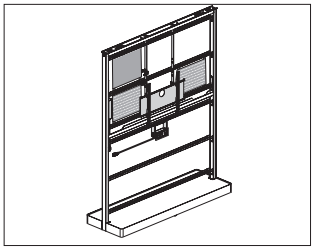

Product Information

Description

This monitor mount pairs with the OE1 Workspace Collection™ fabric upper tile and provides 3 mounting configurations with the option for a user accessible power strip. Mount can be placed to accommodate a seated or standing posture.

Notes

Order the following products separately:

- OE1 fabric upper tile (HZ130.3560R)-for use with monitor mount
- OE1 fabric lower tile (HZ140.3560RP)-for use with user power on single side
- OE1 frame with casters (HZ100.) or OE1 frame with glides (HZ110.)

Monitor mount works on OE1 fabric upper tile (HZ130.) only.

Monitor mount color is always black.

When specifying user power (1P, 2P, 3P) options, order OE1 fabric lower tile (HZ140.3560RP) separately.

When applicable option is specified, interior power strip and user power module will be included.

2 interior technology panels ship with configurations 1N and 1P.

3 interior technology panels ship with configurations 2N, 2P, 3N, and 3P.

Monitor and user power for 60″-wide frames only.

To mount 1 monitor on 1 side of an OE1 agile wall, specify monitor configuration (1).

To mount 2 monitors, 1 on each side of an OE1 agile wall at the same height, specify monitor configuration (2).

To mount 2 monitors, 1 on each side of an OE1 agile wall at different heights, specify monitor configuration (3).

Bracket comes with counterweights. The same number of counterweights are required for 1 or 2 monitors.

Center septum of bracket is the same for 1 or 2 monitors. Specifying 1 or 2 will give the outside mounting bracket.

See OE1 Agile Wall Tech Guide and OE1 planning guide for additional information.

Dimensions

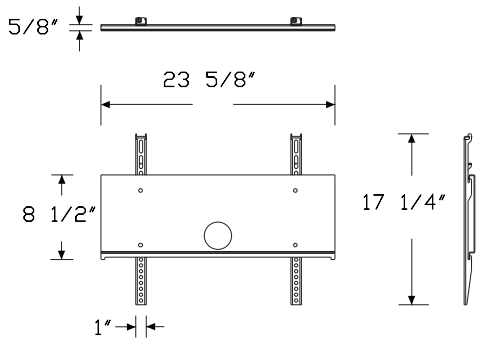

Specification Information

Step 1.

HZ170.

Step 2. Monitor Configuration

1	mounting one monitor at any height on upper tile
2	mounting two monitors at the same height, opposite sides on upper tile
3	mounting two monitors at different heights, opposite sides on upper tile

Step 3. User Power

N	no user power
P	user power on single side

Step 4. Interior Technology Support

N	no interior technology
T	interior power strip + technology panels

Prices for Steps 1-4.

			N	T
HZ170.	**1**	**N**	$1006	1603
		P	$2206	2801
	2	**N**	$1258	2062
		P	$2536	3341
	3	**N**	$1508	2312
		P	$2790	3594

Step 5. Power Strip Finish

For user power on single side (P)

0H	black	+$0
0J	white	+$0

OE1 Mobile Easel Base HZ200.

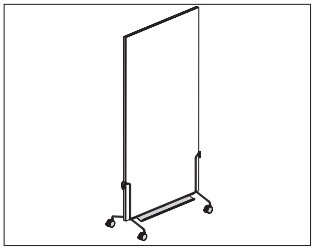

OE1 Boundary

Product Information

Description

This Mobile Easel Base accepts an OE1 Workspace Collection™ Project Board and comes with an integrated accessory tray. Base is on casters that are lockable.

Notes

Use with OE1 Project Board (HZ210.), ordered separately.

OE1 Project Board secures into mobile base via a board latch.

Multiple Mobile Easel Bases can nest together for ease of storage.

Accessory tray finish matches specified base finish.

Metallic and satin paints are smooth.

Dimensions

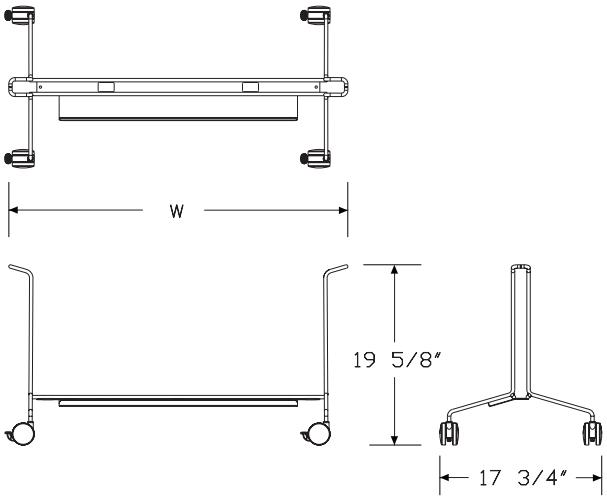

Specification Information

Step 1.

HZ200.

Step 2. Width

36	36″ wide
48	48″ wide

Prices for Steps 1-2.

HZ200.	**36**	$1184
	48	$1515

Step 3. Board Latch Finish

Sand Texture Paint

UBK	ultra black (CP)	+$0
98	studio white (CP)	+$0
8Q	folkstone grey (CP)	+$0
BK	black	+$0

Step 4. Base Frame Finish

Metallic Paint

SNA	satin aluminum A	+$10

Sand Texture Paint

8Q	folkstone grey (CP)	+$0
91	white (CP)	+$0
98	studio white (CP)	+$0
BK	black	+$0
DB3	glacier A	+$8
DN2	nightfall A	+$8
DR1	canyon A	+$8
OLF	olive A	+$8
UBK	ultra black (CP)	+$0

OE1 Project Board HZ210.

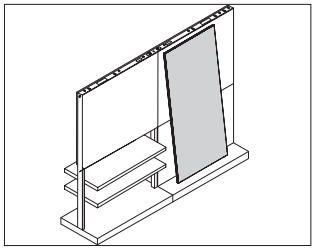

Product Information

Description

This user-movable project board pairs with multiple products within the OE1 Workspace Collection™. It can connect into the OE1 Mobile Easel Base or OE1 Wall Rail Kit or rest against an OE1 Agile Wall frame. Board is available in markerboard or tackable fabric with an option for MicrobeCare™.

Notes

When specifying fabric project board (F) or fabric project board, with MicrobeCare™ (E), fabric direction is vertical.

Fabric is tackable.

Project board is compatible with the following products:

- OE1 mobile easel base (HZ200.)
- OE1 wall rail kit (HZ220.)
- OE1 agile wall frames (HZ100., HZ110.)
- OE1 flip chart hook, pair (HZ920.)
- OE1 marker cup (Y7235.)

Project board accepts Customer's Own Material (COM). COM requires 4.79 yards.

See planning guide for additional information.

Dimensions

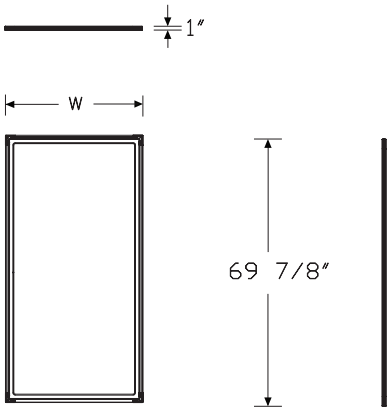

Specification Information

Step 1.

HZ210.

Step 2. Height

70	70″ high

Step 3. Width

36	36″ wide
48	48″ wide

Step 4. Project Board Type

E	fabric project board, with MicrobeCare™
F	fabric project board
M	markerboard project board

Prices for Steps 1-4.

		E	F	M
HZ210. 70	**36**	$2252	2168	1508
	48	$2644	2540	1673

Step 5. Edge Finish

For markerboard project board (M)

UBK	ultra black (CP)	+$0
WMB	markerboard white	+$0
8Q	folkstone grey (CP)	+$0
BK	black	+$0

Step 6. Fabric

For fabric project board, with MicrobeCare™ (E) or fabric project board (F)

Price Category 1	+$0
Price Category 2	+$73
Price Category 3	+$167
Price Category 4	+$287
Price Category 5	+$475
Price Category B	+$296
Price Category C	+$404
Price Category E	+$614

OE1 Wall Rail Kit HZ220.

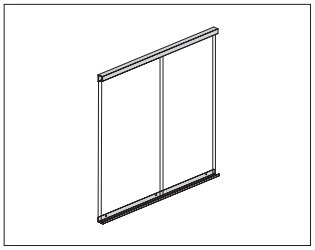

Product Information

Description

This set of top and bottom rails attaches to an architectural wall to accommodate OE1 Workspace Collection™ Project Boards. Screws to attach to wall are included; wall anchor must be sourced according to the installation guidelines for a given wall type.

Notes

36″ wide rails accommodate 1 project board vertically.

72″ wide rails accommodate 2 project boards vertically or 1 project board horizontally.

Metallic and satin paints are smooth.

Use with OE1 Project Board (HZ210.), ordered separately.

See planning guide for additional information.

Dimensions

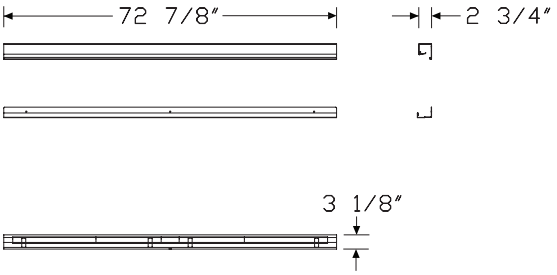

Specification Information

Step 1.

HZ220.

Step 2. Width

36	36″ wide for one vertical board
72	72″ wide for two vertical boards or one horizontal board

Prices for Steps 1-2.

HZ220.	**36**	$453
	72	$701

Step 3. Rail Finish

Metallic Paint

611	beige mist metallic (CP)	+$0
613	silver (CP)	+$0
SNA	satin aluminum	+$30
SNB	satin bronze	+$30
SNC	satin carbon	+$30

Sand Texture Paint

UBK	ultra black (CP)	+$0
8Q	folkstone grey (CP)	+$0
91	white (CP)	+$0
98	studio white (CP)	+$0
BK	black	+$0
G1	graphite (CP)	+$0
WL	warm stone (CP)	+$0
DB3	glacier	+$20
DN2	nightfall	+$20
DR1	canyon	+$20
OLF	olive	+$20

OE1 Agile Wall Corner Cover HZ230.

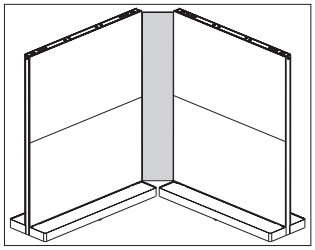

Product Information

Description

This user-movable corner cover fills the gap between 2 perpendicular agile wall structures. Attachment is magnetic.

Notes

See planning guide for additional information.

Dimensions

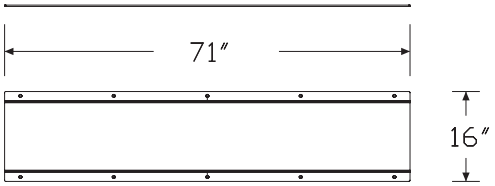

Specification Information

Step 1.

HZ230.

Step 2. Height

72	71″ high

Step 3. Width

16	16″ wide

Prices for Steps 1-3.

		16
HZ230.	**72**	$375

Step 4. Finish

PHA	heathered alpine	+$0
PHL	heathered charcoal	+$0

OE1 Sit-to-Stand Table, Rectangular Square Corner HZ270S

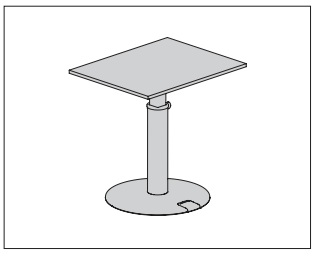

Product Information

Description

This height-adjustable table has a single-column electric lift mechanism and a rectangular worksurface with square corners. Worksurface comes in laminate or veneer. A foot-operated rocker switch mounted on the base activates the table lift mechanism. Shipped knocked down. Product is UL Listed.

Notes

Floor to top-of-surface height adjustment range is 28.35″ to 46.32″.

Multi-ply edge available with laminate worksurfaces only.

Height adjustment is located on table base and is foot activated.

Dimensions

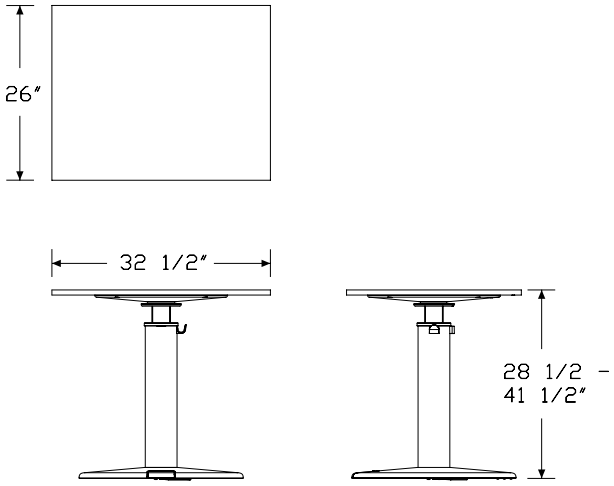

Specification Information

Step 1.

HZ270

Step 2. Edge

S.	squared-edge

Step 3. Depth

26	26″ deep

Step 4. Width

32	32.5″ wide

Step 5. Surface Material

M	thermally fused laminate top/thermoplastic edge
T	thermally fused laminate top/universal edge
W	veneer top/veneer edge

Prices for Steps 1-5.

	M	T	W
HZ270S. 26 32	$2683	2683	3232

Step 6. Top Finish

For thermally fused laminate top/thermoplastic edge (M)

125	natural maple (CP)	+$0
126	natural cherry (CP)	+$0
127	walnut (CP)	+$0
139	light ash (CP)	+$0
140	warm ash (CP)	+$0
8Q	folkstone grey (CP)	+$0
91	white (CP)	+$0
98	studio white (CP)	+$0
LBA	clear on ash (CP)	+$0
LBB	oak on ash (CP)	+$0
LBC	walnut on ash (CP)	+$0
LBF	neutral twill	+$0
LBQ	white twill	+$0
LBU	medium matte walnut (CP)	+$0

For thermally fused laminate top/universal edge (T)

8Q	folkstone grey (CP)	+$0
91	white (CP)	+$0
98	studio white (CP)	+$0

Step 7. Top/Edge Finish		
For veneer top/veneer edge (W)		
OU	walnut A	+$85
WHN	natural white oak A	+$85

Step 8. Edge Finish		
For thermally fused laminate top/thermoplastic edge (M)		
125	natural maple (CP)	+$0
126	natural cherry (CP)	+$0
127	walnut (CP)	+$0
139	light ash (CP)	+$0
140	warm ash (CP)	+$0
8Q	folkstone grey (CP)	+$0
91	white (CP)	+$0
98	studio white (CP)	+$0
LBA	clear on ash (CP)	+$0
LBB	oak on ash (CP)	+$0
LBC	walnut on ash (CP)	+$0
LBF	neutral twill	+$0
LBQ	white twill	+$0
LBU	medium matte walnut (CP)	+$0
For thermally fused laminate top/universal edge (T)		
PLY	plywood edge	+$75

Step 9. Leg/Foot Finish		
Sand Texture Paint		
8Q	folkstone grey (CP)	+$0
98	studio white (CP)	+$0
BK	black	+$0
CC1	cocoa	+$175
DB3	glacier	+$175
DN2	nightfall	+$175
OLF	olive	+$175
UBK	ultra black (CP)	+$0

Step 10. Glides		
G	glides	+$0

OE1 Sit-to-Stand Table, Round HZ275S

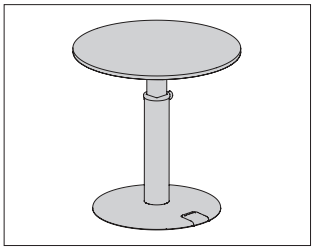

Product Information

Description

This height-adjustable table has a single-column electric lift mechanism and a round worksurface available in laminate or veneer. A foot-operated rocker switch mounted on the base activates the table lift mechanism. Shipped knocked down. Product is UL Listed.

Notes

Floor to top-of-surface height adjustment range is 28.35″ to 46.32″.

Multi-ply edge available with laminate worksurfaces only.

Height adjustment is located on table base and is foot activated.

Dimensions

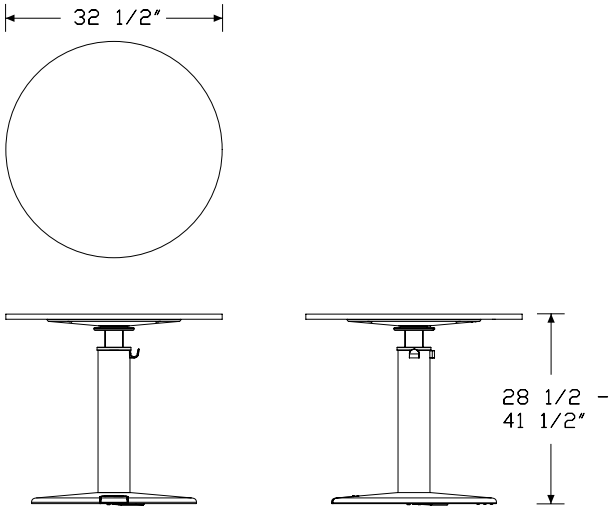

Specification Information

Step 1.

HZ275

Step 2. Edge

S.	squared-edge

Step 3. Diameter

32	32″ diameter

Step 4. Surface Material

M	thermally fused laminate top/thermoplastic edge
W	veneer top/veneer edge
Y	thermally fused laminate top/multi ply edge

Prices for Steps 1-4.

	M	W	Y
HZ275S. 32	$3019	3568	3019

Step 5. Top Finish

For thermally fused laminate top/thermoplastic edge (M)

125	natural maple (CP)	+$0
126	natural cherry (CP)	+$0
127	walnut (CP)	+$0
139	light ash (CP)	+$0
140	warm ash (CP)	+$0
8Q	folkstone grey (CP)	+$0
91	white (CP)	+$0
98	studio white (CP)	+$0
LBA	clear on ash (CP)	+$0
LBB	oak on ash (CP)	+$0
LBC	walnut on ash (CP)	+$0
LBF	neutral twill	+$0
LBQ	white twill	+$0
LBU	medium matte walnut (CP)	+$0

For thermally fused laminate top/multi ply edge (Y)

8Q	folkstone grey (CP)	+$0
91	white (CP)	+$0
98	studio white (CP)	+$0

Step 6. Top/Edge Finish

For veneer top/veneer edge (W)

OU	walnut A	+$85
WHN	natural white oak A	+$85

OE1 Sit-to-Stand Table, Round

continued

Step 7. Edge Finish		
For thermally fused laminate top/thermoplastic edge (M)		
125	natural maple (CP)	+$0
126	natural cherry (CP)	+$0
127	walnut (CP)	+$0
139	light ash (CP)	+$0
140	warm ash (CP)	+$0
8Q	folkstone grey (CP)	+$0
91	white (CP)	+$0
98	studio white (CP)	+$0
LBA	clear on ash (CP)	+$0
LBB	oak on ash (CP)	+$0
LBC	walnut on ash (CP)	+$0
LBF	neutral twill	+$0
LBQ	white twill	+$0
LBU	medium matte walnut (CP)	+$0
For thermally fused laminate top/multi ply edge (Y)		
PDG	multi ply edge	+$75

Step 8. Leg/Foot Finish		
Sand Texture Paint		
8Q	folkstone grey (CP)	+$0
98	studio white (CP)	+$0
BK	black	+$0
CC1	cocoa	+$175
DB3	glacier	+$175
DN2	nightfall	+$175
OLF	olive	+$175
UBK	ultra black (CP)	+$0

Step 9. Glides		
G	glides	+$0

OE1 Sit-to-Stand Table, Rectangular Round Corner HZ280S

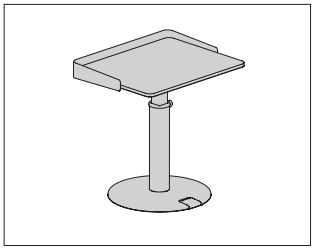

Product Information

Description

This height-adjustable table has a single-column electric lift mechanism and a rectangular worksurface with radius corners. Worksurface comes in laminate or veneer. Optional metal surface surround mounts to underside of worksurface via brackets. A foot-operated rocker switch mounted on the base activates the table lift mechanism. Shipped knocked down. Product is UL Listed.

Notes

Table surface has predrilled holes on underside for metal surround attachment.

Floor to top-of-surface height adjustment range is 28.35″ to 46.32″.

Multi-ply edge available with laminate worksurfaces only.

Height adjustment is located on table base and is foot activated.

Dimensions

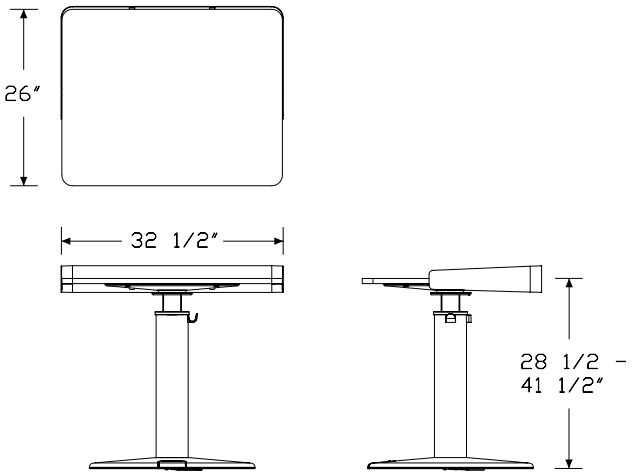

Specification Information

Step 1.

HZ280

Step 2. Edge

S.	squared-edge

Step 3. Depth

26	26″ deep

Step 4. Width

32	32.5″ wide

Step 5. Surface Material

M	thermally fused laminate top/thermoplastic edge
W	veneer top/veneer edge
Y	thermally fused laminate top/multi ply edge

Step 6. Surround

NN	no metal surface surround
SS	metal surface surround

Prices for Steps 1-6.

	MNN	MSS	WNN	WSS	YNN	YSS
HZ280S. 26 32	$2928	3163	3477	3712	2928	3163

Step 7. Top Finish

For thermally fused laminate top/thermoplastic edge (M)

125	natural maple (CP)	+$0
126	natural cherry (CP)	+$0
127	walnut (CP)	+$0
139	light ash (CP)	+$0
140	warm ash (CP)	+$0
8Q	folkstone grey (CP)	+$0
91	white (CP)	+$0
98	studio white (CP)	+$0
LBA	clear on ash (CP)	+$0
LBB	oak on ash (CP)	+$0
LBC	walnut on ash (CP)	+$0
LBF	neutral twill	+$0
LBQ	white twill	+$0
LBU	medium matte walnut (CP)	+$0

For thermally fused laminate top/multi ply edge (Y)		
8Q	folkstone grey (CP)	+$0
91	white (CP)	+$0
98	studio white (CP)	+$0

Step 8. Top/Edge Finish

For veneer top/veneer edge (W)		
OU	walnut A	+$85
WHN	natural white oak A	+$85

Step 9. Edge Finish

For thermally fused laminate top/thermoplastic edge (M)		
125	natural maple (CP)	+$0
126	natural cherry (CP)	+$0
127	walnut (CP)	+$0
139	light ash (CP)	+$0
140	warm ash (CP)	+$0
8Q	folkstone grey (CP)	+$0
91	white (CP)	+$0
98	studio white (CP)	+$0
LBA	clear on ash (CP)	+$0
LBB	oak on ash (CP)	+$0
LBC	walnut on ash (CP)	+$0
LBF	neutral twill	+$0
LBQ	white twill	+$0
LBU	medium matte walnut (CP)	+$0

For thermally fused laminate top/multi ply edge (Y)		
PDG	multi ply edge	+$75

Step 10. Surround Finish

For metal surface surround (SS)		
8Q	folkstone grey (CP)	+$0
98	studio white (CP)	+$0
BK	black	+$0
CC1	cocoa	+$0
DB3	glacier	+$0
DN2	nightfall	+$0
OLF	olive	+$0
UBK	ultra black (CP)	+$0

Step 11. Leg/Foot Finish

Sand Texture Paint		
8Q	folkstone grey (CP)	+$0
98	studio white (CP)	+$0
BK	black	+$0
CC1	cocoa	+$175
DB3	glacier	+$175
DN2	nightfall	+$175
OLF	olive	+$175
UBK	ultra black (CP)	+$0

Step 12. Glides

G	glides	+$0

OE1 Sit-to-Stand Table USB C Power Module HZ285.

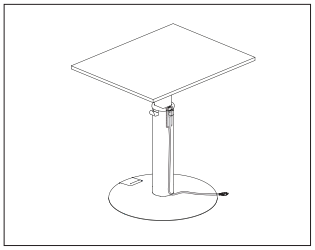

Product Information

Description

This power module provides 1 30W USB C port that mounts inside the lower column trim ring and plugs into the table control box. This configuration provides full table functionality with a single external power cord plugged into an outlet.

Dimensions

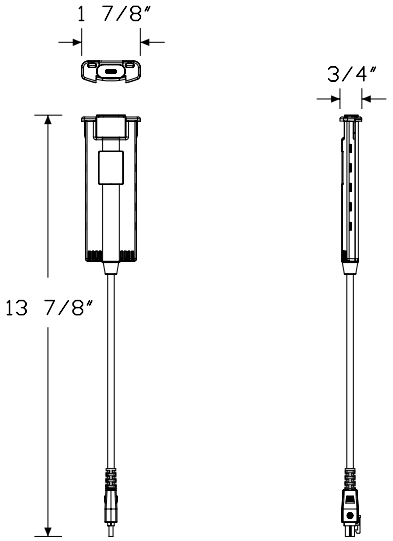

Specification Information

Step 1.

HZ285.	$403

OE1 Micro Pack, Single HZ300S

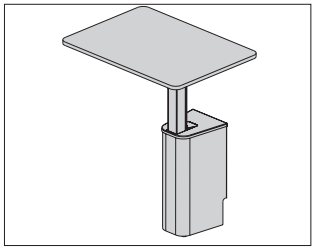

Product Information

Description

This unit is a height-adjustable surface mounted to an architectural wall. It comes with a cable management sleeve and 1 bag hook. Optional screen can be ordered separately. Available with several power options or without power.

Notes

Single Micro Pack is always wall mounted. Wall mounting hardware not included.

Electric height adjustment range is 27″-42″.

Actual depth is 23.5″. Actual width is 32.5″.

Cable management sleeve mounts to the back of leg.

Included bag hook mounts in front of leg on the base.

Order optional screen and screen liner separately:

- OE1 micro pack privacy screen, single/4-pack (HZ330.)
- OE1 micro pack screen liner (HZ350.)

When power is specified, the Logic Mini unit is included with the product. It does not need to be ordered separately.

When power is specified, an AC splitter is included. It allows the Logic Mini and the Micro Pack to plug into it, and a single cord exits the Micro Pack base to plug into a wall outlet.

The single Micro Pack unit cannot be mounted directly over a floor core/outlet.

Dimensions

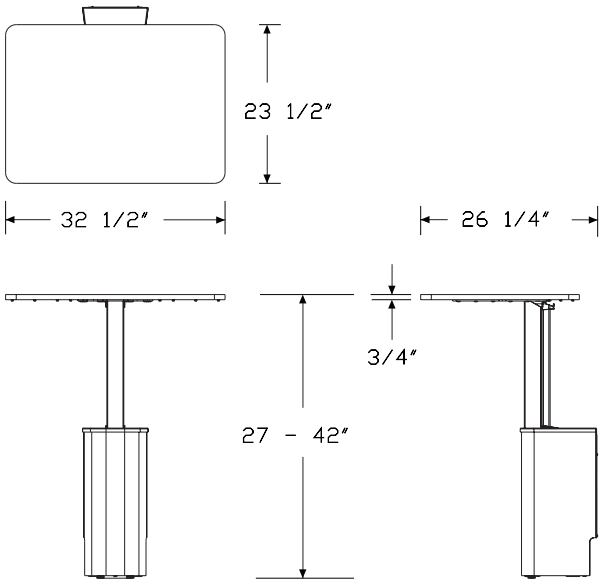

Specification Information

Step 1.

HZ300

Step 2. Edge

S. squared-edge

Step 3. Depth

23 23″ deep

Step 4. Width

32 32″ wide

Step 5. Surface Material

L high-pressure laminate top/thermoplastic edge
W veneer top/veneer edge [A]
A high-pressure laminate top/thermoplastic edge with MicrobeCare™ [A]
B veneer top/veneer edge with MicrobeCare™ [A]

Step 6. Top Thickness

04 ¾″ thick

Step 7. Mechanism

E electric

Step 8. User Power Type

N no power
G grommet mount
S surface clamp
B below surface attachment
M grommet mount/below surface mount
C surface clamp/below surface mount

Prices for Steps 1-8.

	L04EN	L04EG	L04ES	L04EB	L04EM	L04EC
HZ300S. 23 32	$3318	3876	3759	3759	4466	4350

	W04EN	W04EG	W04ES	W04EB	W04EM	W04EC
HZ300S. 23 32	$4310	4870	4752	4752	5459	5344

	A04EN	A04EG	A04ES	A04EB	A04EM	A04EC
HZ300S. 23 32	$3408	3966	3850	3850	4556	4440

	B04EN	B04EG	B04ES	B04EB	B04EM	B04EC
HZ300S. 23 32	$4402	4958	4843	4843	5550	5434

Step 9. Switch Option

SKS rounded simple switch +$0

Step 10. Grommet Power Access Cutout

For grommet mount (G) or grommet mount/below surface mount (M)

LC left cutout for grommet mount Logic Mini for Micro Packs +$0

Step 11. Power Configuration

For grommet mount (G), surface clamp (S), or below surface attachment (B)

J 1 simplex recptacle, 1 powered USB-A/USB-C combo +$215
K 2 simplex receptacles +$0

For grommet mount/below surface mount (M) or surface clamp/below surface mount (C)

L 1 simplex recptacle, 1 powered USB-A/USB-C combo on top/ 2 simplex recptacles on bottom +$0

Step 12. Power Attachment Finish

For grommet mount (G), surface clamp (S), below surface attachment (B), grommet mount/below surface mount (M), or surface clamp/below surface mount (C)

91 white (CP) +$0
98 studio white (CP) +$0
BK black +$0
G1 graphite (CP) +$0
UBK ultra black (CP) +$0

Step 13.

Top Finish

For high-pressure laminate top/thermoplastic edge (L) or high-pressure laminate top/thermoplastic edge with MicrobeCare™ (A)

125	natural maple (CP)	+$0
126	natural cherry (CP)	+$0
127	walnut (CP)	+$0
139	light ash (CP)	+$0
140	warm ash (CP)	+$0
76	light brown walnut	+$0
8Q	folkstone grey (CP)	+$0
91	white (CP)	+$0
98	studio white (CP)	+$0
CL	cool grey neutral	+$0
G1	graphite (CP)	+$0
HP	light anigre	+$0
LBA	clear on ash (CP)	+$0
LBB	oak on ash (CP)	+$0
LBC	walnut on ash (CP)	+$0
LBF	neutral twill	+$0
LBJ	graphite twill	+$0
LBQ	white twill	+$0
LBR	phantom ecru	+$0
LBS	phantom cocoa	+$0
LBU	medium matte walnut (CP)	+$0
LBV	warm grey teak	+$0
LU	soft white	+$0
WL	warm stone (CP)	+$0
WN	warm grey neutral	+$0

Top/Edge Finish

For veneer top/veneer edge (W) or veneer top/veneer edge with MicrobeCare™ (B)

2U	light brown walnut A	+$85
40	dark brown walnut A	+$85
CHD	noble cherry	+$85
ET	clear on ash A	+$85
EU	oak on ash A	+$85
EV	walnut on ash A	+$85
EW	medium matte walnut A	+$85
OK	white oak (nonstandard) A	+$85
UL	natural maple A	+$85
WHN	natural white oak	+$85

Step 14. Edge Finish

For high-pressure laminate top/thermoplastic edge (L) or high-pressure laminate top/thermoplastic edge with MicrobeCare™ (A)

125	natural maple (CP)	+$0
126	natural cherry (CP)	+$0
127	walnut (CP)	+$0
139	light ash (CP)	+$0
140	warm ash (CP)	+$0
76	light brown walnut	+$0
8Q	folkstone grey (CP)	+$0
91	white (CP)	+$0
98	studio white (CP)	+$0
CL	cool grey neutral	+$0
G1	graphite (CP)	+$0
HF	inner tone light	+$0
HP	light anigre	+$0
LBA	clear on ash (CP)	+$0
LBB	oak on ash (CP)	+$0
LBC	walnut on ash (CP)	+$0
LBF	neutral twill	+$0
LBJ	graphite twill	+$0
LBQ	white twill	+$0
LBR	phantom ecru	+$0
LBS	phantom cocoa	+$0
LBU	medium matte walnut (CP)	+$0
LBV	warm grey teak	+$0
LU	soft white	+$0
UBK	ultra black (CP)	+$0
WL	warm stone (CP)	+$0
WN	warm grey neutral	+$0

Step 15. Base Finish

Sand Texture Paint

8Q	folkstone grey (CP)	+$0
91	white (CP)	+$0
98	studio white (CP)	+$0
BK	black	+$0
DB3	glacier	+$175
DN2	nightfall	+$175
DR1	canyon	+$175
OLF	olive	+$175
UBK	ultra black (CP)	+$0

OE1 Micro Pack, 3-Pack HZ310S

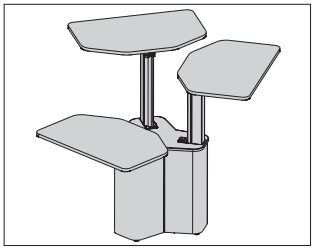

Product Information

Description

This freestanding unit is a pack of 3 height-adjustable surfaces. It comes with a cable management sleeve and 3 bag hooks. Optional screens can be ordered separately. Available with several power options or without power.

Notes

Electric height adjustment range is 27″-42″ above the floor.

Actual depth is 19.68″. Actual width is 30.3″.

Cable management sleeve mounts to the back of leg.

Included bag hooks can be mounted in front of each leg on the base.

Order optional screen and screen liner separately:

- OE1 micro pack privacy screen, 3-pack (HZ340.)
- OE1 micro pack screen liner (HZ350.)

When power is specified, the Logic Mini unit is included with the product. It does not need to be ordered separately.

When power is specified, an AC splitter is included. It allows the Logic Mini and the Micro Pack to plug into it, and a single cord exits the Micro Pack base to plug into a floor core, wall outlet, or Logic Reach unit.

The Micro Pack, 3-pack unit cannot be mounted directly over a floor core/outlet.

Dimensions

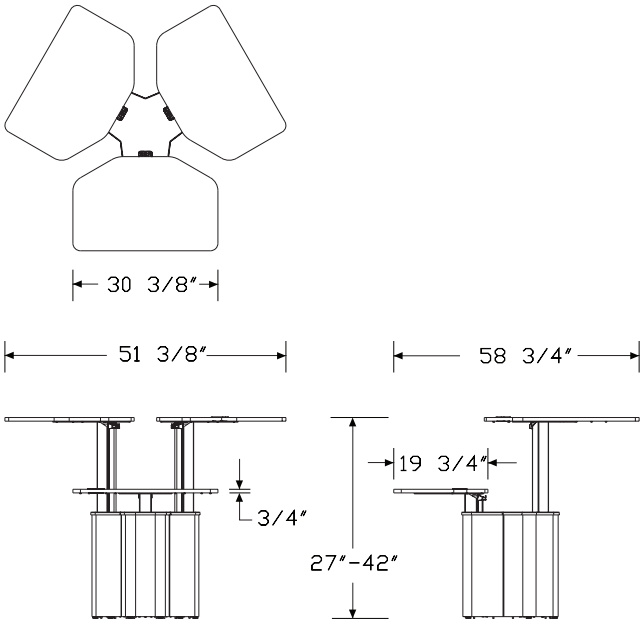

Specification Information

Step 1.

HZ310

Step 2. Edge

S. squared-edge

Step 3. Depth

20 20″ deep

Step 4. Width

31 31″ wide

Step 5. Surface Material

L high-pressure laminate top/thermoplastic edge

W veneer top/veneer edge A

A high-pressure laminate top/thermoplastic edge with MicrobeCare™ A

B veneer top/veneer edge with MicrobeCare™ A

Step 6. Top Thickness

04 ¾″ thick

Step 7. Mechanism

E electric

Step 8. User Power Type

N no power

G grommet mount

S surface clamp

B below surface attachment

M grommet mount/below surface mount

C surface clamp/below surface mount

Prices for Steps 1-8.

	L04EN	L04EG	L04ES	L04EB	L04EM	L04EC
HZ310S. 20 31	$8890	10563	10210	10210	12341	11989

	W04EN	W04EG	W04ES	W04EB	W04EM	W04EC
HZ310S. 20 31	$11557	13228	12877	12877	15008	14655

	A04EN	A04EG	A04ES	A04EB	A04EM	A04EC
HZ310S. 20 31	$9162	10835	10481	10481	12614	12260

	B04EN	B04EG	B04ES	B04EB	B04EM	B04EC
HZ310S. 20 31	$11828	13500	13146	13146	15278	14923

Step 9. Switch Option		
SKS	rounded simple switch	+$0

Step 10. Grommet Power Access Cutout		
For grommet mount (G) or grommet mount/below surface mount (M)		
LC	left cutout for grommet mount Logic Mini for Micro Packs	+$0

Step 11. Power Configuration		
For grommet mount (G), surface clamp (S), or below surface attachment (B)		
J	1 simplex recptacle, 1 powered USB-A/USB-C combo	+$645
K	2 simplex receptacles	+$0
For grommet mount/below surface mount (M) or surface clamp/below surface mount (C)		
L	1 simplex recptacle, 1 powered USB-A/USB-C combo on top/ 2 simplex recptacles on bottom	+$0

Step 12. Power Attachment Finish		
For grommet mount (G), surface clamp (S), below surface attachment (B), grommet mount/below surface mount (M), or surface clamp/below surface mount (C)		
91	white (CP)	+$0
98	studio white (CP)	+$0
BK	black	+$0
G1	graphite (CP)	+$0
UBK	ultra black (CP)	+$0

Step 13.		
Top Finish		
For high-pressure laminate top/thermoplastic edge (L) or high-pressure laminate top/thermoplastic edge with MicrobeCare™ (A)		
125	natural maple (CP)	+$0
126	natural cherry (CP)	+$0
127	walnut (CP)	+$0
139	light ash (CP)	+$0
140	warm ash (CP)	+$0
76	light brown walnut	+$0
8Q	folkstone grey (CP)	+$0
91	white (CP)	+$0
98	studio white (CP)	+$0
CL	cool grey neutral	+$0
G1	graphite (CP)	+$0
HP	light anigre	+$0
LBA	clear on ash (CP)	+$0
LBB	oak on ash (CP)	+$0
LBC	walnut on ash (CP)	+$0
LBF	neutral twill	+$0
LBJ	graphite twill	+$0
LBQ	white twill	+$0
LBR	phantom ecru	+$0
LBS	phantom cocoa	+$0
LBU	medium matte walnut (CP)	+$0
LBV	warm grey teak	+$0
LU	soft white	+$0
WL	warm stone (CP)	+$0
WN	warm grey neutral	+$0
Top/Edge Finish		
For veneer top/veneer edge (W) or veneer top/veneer edge with MicrobeCare™ (B)		
2U	light brown walnut A	+$85
40	dark brown walnut A	+$85
CHD	noble cherry	+$85
ET	clear on ash A	+$85
EU	oak on ash A	+$85
EV	walnut on ash A	+$85
EW	medium matte walnut A	+$85
OK	white oak (nonstandard) A	+$85
UL	natural maple A	+$85
WHN	natural white oak	+$85

Step 14. Edge Finish		
For high-pressure laminate top/thermoplastic edge (L) or high-pressure laminate top/thermoplastic edge with MicrobeCare™ (A)		
125	natural maple (CP)	+$0
126	natural cherry (CP)	+$0
127	walnut (CP)	+$0
139	light ash (CP)	+$0
140	warm ash (CP)	+$0
76	light brown walnut	+$0
8Q	folkstone grey (CP)	+$0
91	white (CP)	+$0
98	studio white (CP)	+$0
CL	cool grey neutral	+$0
G1	graphite (CP)	+$0
HF	inner tone light	+$0
HP	light anigre	+$0
LBA	clear on ash (CP)	+$0
LBB	oak on ash (CP)	+$0
LBC	walnut on ash (CP)	+$0
LBF	neutral twill	+$0
LBJ	graphite twill	+$0
LBQ	white twill	+$0
LBR	phantom ecru	+$0
LBS	phantom cocoa	+$0
LBU	medium matte walnut (CP)	+$0
LBV	warm grey teak	+$0
LU	soft white	+$0
UBK	ultra black (CP)	+$0
WL	warm stone (CP)	+$0
WN	warm grey neutral	+$0

Step 15. Base Finish		
Sand Texture Paint		
8Q	folkstone grey (CP)	+$0
91	white (CP)	+$0
98	studio white (CP)	+$0
BK	black	+$0
DB3	glacier	+$420
DN2	nightfall	+$420
DR1	canyon	+$420
OLF	olive	+$420
UBK	ultra black (CP)	+$0

OE1 Micro Pack, 4-Pack HZ320S

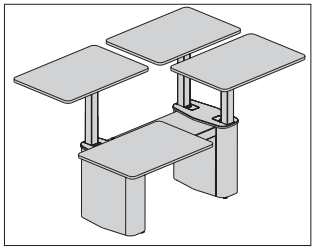

Product Information

Description

This freestanding unit is a pack of 4 height-adjustable surfaces. It comes with a cable management sleeve and 4 bag hooks. Optional screens can be ordered separately. Available with several power options or without power.

Notes

Electric height adjustment range is 27″-42″ above the floor.

Actual depth is 22.5″. Actual width is 32.5″.

Overall width of 4-pack is 70″. Width aligns with 70″-wide center screen.

Cable management sleeve mounts to the back of leg.

Included bag hooks can be mounted in front of each leg on the base or on the side of the left and right bases.

Order optional screens and screen liner separately:

- OE1 micro pack privacy screen, single/4-pack (HZ330.)
- OE1 micro pack screen liner (HZ350.)
- OE1 micro pack center screen, 4-pack, flat edge (HZ360.)
- OE1 micro pack center screen, 4-pack, Pari (HZ370.)
- OE1 micro pack center screen, 4-pack, laminate (HZ380.)

When power is specified, the Logic Mini unit is included with the product. It does not need to be ordered separately.

When power is specified, an AC splitter is included. It allows the Logic Mini and the Micro Pack to plug into it, and a single cord exits the Micro Pack base to plug into a floor core, wall outlet, or Logic Reach unit.

The Micro Pack, 4-pack unit cannot be mounted directly over a floor core/outlet.

When specifying grommet power access cutout (LR) option, 2 of the 4 surfaces will have a left-hand cutout and the other 2 surfaces will have a right-hand cutout. At time of installation, the choice can be made to have cutouts inbound or outbound.

Dimensions

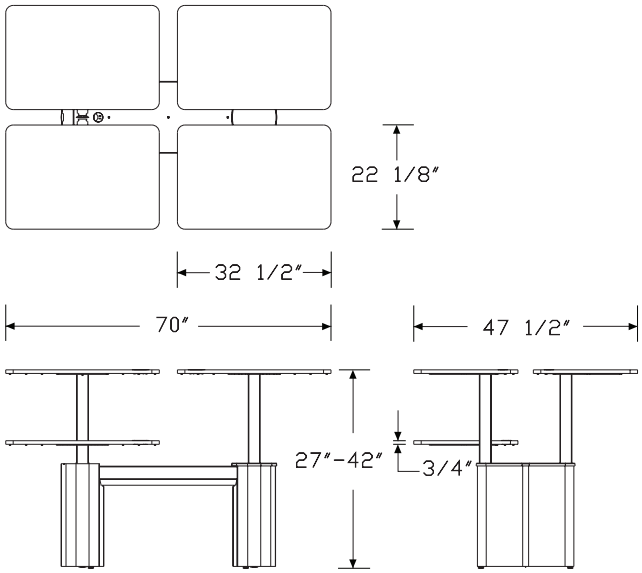

Specification Information

Step 1.

HZ320

Step 2. Edge

S. squared-edge

Step 3. Depth

23 23″ deep

Step 4. Width

33 33″ wide

Step 5. Surface Material

L high-pressure laminate top/thermoplastic edge
W veneer top/veneer edge A
A high-pressure laminate top/thermoplastic edge with MicrobeCare™ A
B veneer top/veneer edge with MicrobeCare™ A

Step 6. Top Thickness

04 ¾″ thick

Step 7. Mechanism

E electric

Step 8. User Power Type

N no power
G grommet mount
S surface clamp
B below surface attachment
M grommet mount/below surface mount
C surface clamp/below surface mount

Prices for Steps 1-8.

	L04EN	L04EG	L04ES	L04EB	L04EM	L04EC
HZ320S. 23 33	$12629	13907	13438	13438	18089	17620

	W04EN	W04EG	W04ES	W04EB	W04EM	W04EC
HZ320S. 23 33	$16604	17883	17414	17414	22064	21595

	A04EN	A04EG	A04ES	A04EB	A04EM	A04EC
HZ320S. 23 33	$12990	14269	13799	13799	18450	17981

	B04EN	B04EG	B04ES	B04EB	B04EM	B04EC
HZ320S. 23 33	$16966	18244	17775	17775	22427	21957

Step 9. Switch Option

SKS rounded simple switch +$0

Step 10. Grommet Power Access Cutout

For grommet mount (G) or grommet mount/below surface mount (M)

LR left and right cutout for logic mini for micro packs +$0

Step 11. Power Configuration

For grommet mount (G), surface clamp (S), or below surface attachment (B)

J 1 simplex recptacle, 1 powered USB-A/USB-C combo +$860
K 2 simplex receptacles +$0

For grommet mount/below surface mount (M) or surface clamp/below surface mount (C)

L 1 simplex recptacle, 1 powered USB-A/USB-C combo on top/ 2 simplex recptacles on bottom +$0

Step 12. Power Attachment Finish

For grommet mount (G), surface clamp (S), below surface attachment (B), grommet mount/below surface mount (M), or surface clamp/below surface mount (C)

91 white (CP) +$0
98 studio white (CP) +$0
BK black +$0
G1 graphite (CP) +$0
UBK ultra black (CP) +$0

Step 13.

Top Finish

For high-pressure laminate top/thermoplastic edge (L) or high-pressure laminate top/thermoplastic edge with MicrobeCare™ (A)

125	natural maple (CP)	+$0
126	natural cherry (CP)	+$0
127	walnut (CP)	+$0
139	light ash (CP)	+$0
140	warm ash (CP)	+$0
76	light brown walnut	+$0
8Q	folkstone grey (CP)	+$0
91	white (CP)	+$0
98	studio white (CP)	+$0
CL	cool grey neutral	+$0
G1	graphite (CP)	+$0
HP	light anigre	+$0
LBA	clear on ash (CP)	+$0
LBB	oak on ash (CP)	+$0
LBC	walnut on ash (CP)	+$0
LBF	neutral twill	+$0
LBJ	graphite twill	+$0
LBQ	white twill	+$0
LBR	phantom ecru	+$0
LBS	phantom cocoa	+$0
LBU	medium matte walnut (CP)	+$0
LBV	warm grey teak	+$0
LU	soft white	+$0
WL	warm stone (CP)	+$0
WN	warm grey neutral	+$0

Top/Edge Finish

For veneer top/veneer edge (W) or veneer top/veneer edge with MicrobeCare™ (B)

2U	light brown walnut A	+$85
40	dark brown walnut A	+$85
CHD	noble cherry	+$85
ET	clear on ash A	+$85
EU	oak on ash A	+$85
EV	walnut on ash A	+$85
EW	medium matte walnut A	+$85
OK	white oak (nonstandard) A	+$85
UL	natural maple A	+$85
WHN	natural white oak	+$85

Step 14. Edge Finish

For high-pressure laminate top/thermoplastic edge (L) or high-pressure laminate top/thermoplastic edge with MicrobeCare™ (A)

125	natural maple (CP)	+$0
126	natural cherry (CP)	+$0
127	walnut (CP)	+$0
139	light ash (CP)	+$0
140	warm ash (CP)	+$0
76	light brown walnut	+$0
8Q	folkstone grey (CP)	+$0
91	white (CP)	+$0
98	studio white (CP)	+$0
CL	cool grey neutral	+$0
G1	graphite (CP)	+$0
HF	inner tone light	+$0
HP	light anigre	+$0
LBA	clear on ash (CP)	+$0
LBB	oak on ash (CP)	+$0
LBC	walnut on ash (CP)	+$0
LBF	neutral twill	+$0
LBJ	graphite twill	+$0
LBQ	white twill	+$0
LBR	phantom ecru	+$0
LBS	phantom cocoa	+$0
LBU	medium matte walnut (CP)	+$0
LBV	warm grey teak	+$0
LU	soft white	+$0
UBK	ultra black (CP)	+$0
WL	warm stone (CP)	+$0
WN	warm grey neutral	+$0

Step 15. Base Finish

Sand Texture Paint

8Q	folkstone grey (CP)	+$0
91	white (CP)	+$0
98	studio white (CP)	+$0
BK	black	+$0
DB3	glacier	+$590
DN2	nightfall	+$590
DR1	canyon	+$590
OLF	olive	+$590
UBK	ultra black (CP)	+$0

OE1 Micro Pack Privacy Screen, Single/4-Pack HZ330.

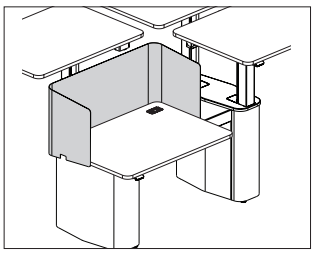

Product Information

Description

This metal screen attaches to the surface of the OE1 Workspace Collection™ Micro Pack, 4-Pack and Micro Pack, Single. Attachment hardware included. Package contains 1 screen.

Notes

Screen is used on the surface of the OE1 single Micro Pack (HZ300) and 4-pack (HZ320). It attaches directly to the surface.

Order felt screen liner (HZ350.) separately.

Dimensions

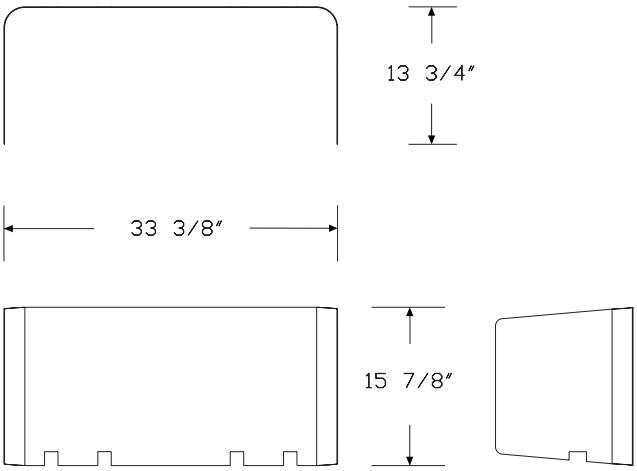

Specification Information

Step 1.

HZ330.

Step 2. Height

14	14″ high (from top of surface to top of screen)

Step 3. Width

33	33″ wide

Prices for Steps 1-3.

		33
HZ330.	**14**	$708

Step 4. Screen Finish

Sand Texture Paint

8Q	folkstone grey (CP)	+$0
91	white (CP)	+$0
98	studio white (CP)	+$0
BK	black	+$0
DB3	glacier	+$10
DN2	nightfall	+$10
DR1	canyon	+$10
OLF	olive	+$10
UBK	ultra black (CP)	+$0

OE1 Micro Pack Privacy Screen, 3-Pack HZ340.

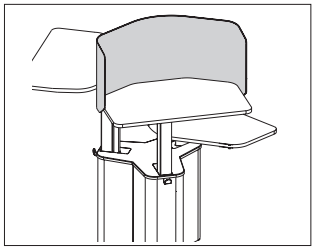

Product Information

Description

This metal screen attaches to the surface of the OE1 Workspace Collection™ Micro Pack, 3-Pack. Attachment hardware included. Package contains 1 screen.

Notes

Screen is used on the surface of the OE1 Micro Pack, 3-pack (HZ310). It attaches directly to the surface.

Order felt screen liner (HZ350.) separately.

Dimensions

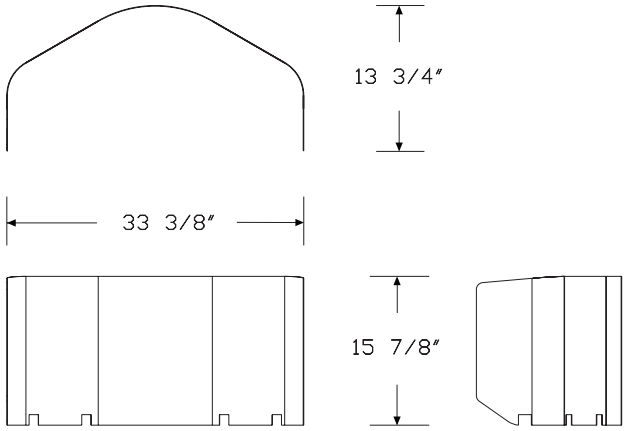

Specification Information

Step 1.

HZ340.

Step 2. Height

14	14″ high (from top of surface to top of screen)

Step 3. Width

32	32″ wide

Prices for Steps 1-3.

		32
HZ340.	**14**	$672

Step 4. Screen Finish

Sand Texture Paint

8Q	folkstone grey (CP)	+$0
91	white (CP)	+$0
98	studio white (CP)	+$0
BK	black	+$0
DB3	glacier	+$10
DN2	nightfall	+$10
DR1	canyon	+$10
OLF	olive	+$10
UBK	ultra black (CP)	+$0

OE1 Micro Pack Screen Liner HZ350.

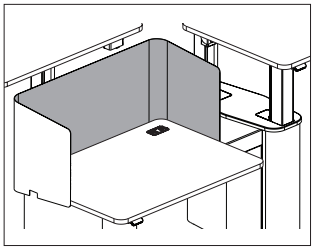

Product Information

Description

This felt liner attaches magnetically to the metal surface-mounted OE1 Workspace Collection™ Micro Pack screen. It provides softness and a touch of color. Package contains 1 liner.

Notes

Order the following Micro Pack screens separately:

- OE1 micro pack privacy screen, single/4-pack (HZ330.)
- OE1 micro pack privacy screen, 3-pack (HZ340.)

Dimensions

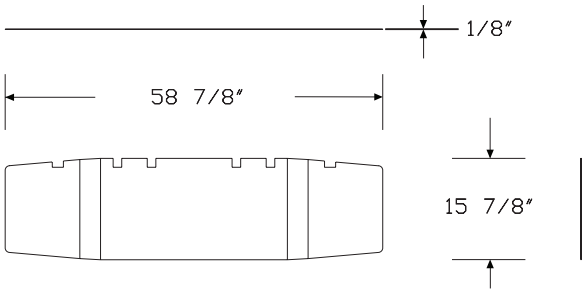

Specification Information

Step 1.

HZ350.

Step 2. Liner Type

1	liner for single micro pack or 4-pack micro pack
2	liner for 3-pack micro pack

Prices for Steps 1-2.

HZ350.	**1**	$470
	2	$470

Step 3. Screen Liner Fabric

Price Category 4	+$0

OE1 Micro Pack Center Screen, 4-Pack, Flat Edge

HZ360.

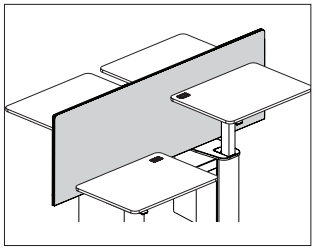

Product Information

Description

This screen provides privacy between surfaces of the OE1 Workspace Collection™ Micro Pack, 4-Pack. Installed height of the screen is 46″ or 53″. Attachment hardware included.

Notes

Screen accepts Customer's Own Material (COM). Yardage is estimated.

Height—Yards

23 (to reach 46″ high datum)—2.46

30 (to reach 53″ high datum)—4.91

Dimensions

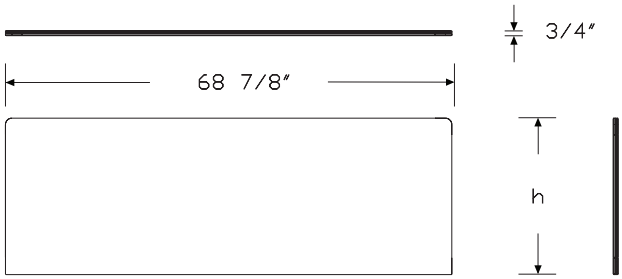

Specification Information

Step 1.

HZ360.

Step 2. Height

23 23″ high (to reach the 46″ high datum)

30 30″ high (to reach 53″ datum)

Step 3. Width

70 70″ wide

Step 4. Surface Material

D tackable fabric, horizontal with MicrobeCare™

R tackable fabric, horizontal

Prices for Steps 1-4.

	D	R
HZ360. 23 70	$1363	1277
30 70	$1627	1541

Step 5. Fabric

For 23″ high (to reach the 46″ high datum) (23)

Price Category 1	+$0
Price Category 2	+$23
Price Category 3	+$55
Price Category 4	+$97
Price Category C	+$236
Price Category E	+$356
Price Category 5	+$166
Price Category B	+$0

For 30″ high (to reach 53″ datum) (30)

Price Category B	+$0
Price Category 1	+$0
Price Category 2	+$46
Price Category 3	+$109
Price Category 4	+$196
Price Category 5	+$331
Price Category C	+$472
Price Category E	+$713

OE1 Micro Pack Center Screen, 4-Pack, Pari HZ370.

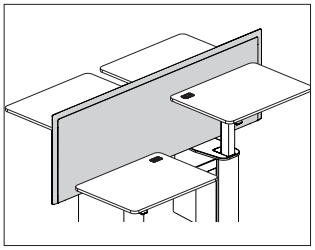

Product Information

Description

This screen provides privacy between surfaces of the OE1 Workspace Collection™ Micro Pack, 4-Pack. Installed height of the screen is 46″ or 53″. Attachment hardware included.

Notes

Screen accepts Customer's Own Material (COM). Yardage is estimated.

Height—Yards

23 (to reach 46″ high datum)—2.46

30 (to reach 53″ high datum)—4.91

Dimensions

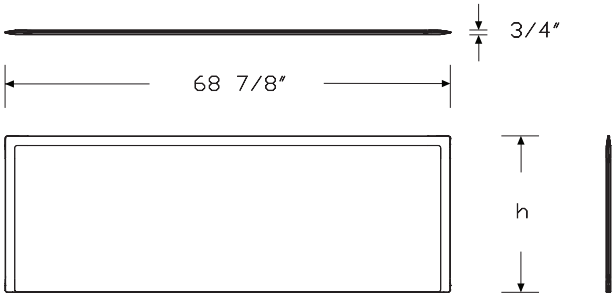

Specification Information

Step 1.

HZ370.

Step 2. Height

23	23″ high (to reach the 46″ high datum)
30	30″ high (to reach 53″ datum)

Step 3. Width

70	70″ wide

Step 4. Surface Material

D	tackable fabric, horizontal with MicrobeCare™
R	tackable fabric, horizontal

Prices for Steps 1-4.

		D	R
HZ370.	**23 70**	$1554	1470
	30 70	$1863	1776

Step 5. Fabric

For 23″ high (to reach the 46″ high datum) (23)

Price Category B	+$0
Price Category 1	+$0
Price Category 2	+$23
Price Category 3	+$55
Price Category 4	+$97
Price Category 5	+$166
Price Category C	+$236
Price Category E	+$356

For 30″ high (to reach 53″ datum) (30)

Price Category B	+$0
Price Category 1	+$0
Price Category 2	+$46
Price Category 3	+$109
Price Category 4	+$196
Price Category 5	+$331
Price Category C	+$472
Price Category E	+$713

OE1 Micro Pack Center Screen, 4-Pack, Laminate

HZ380.

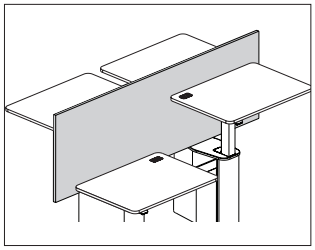

Product Information

Description

This screen provides privacy between surfaces of the OE1 Workspace Collection™ Micro Pack, 4-Pack. Installed height of the screen is 46″ or 53″. Attachment hardware included.

Dimensions

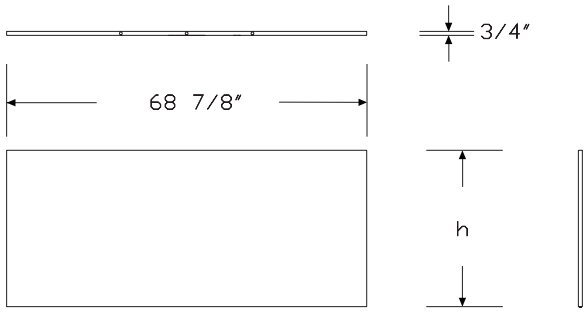

Specification Information

Step 1.

HZ380.

Step 2. Height

23	23″ high (to reach the 46″ high datum)
30	30″ high (to reach 53″ datum)

Step 3. Width

70	70″ wide

Step 4. Surface Material

L	high-pressure laminate top/thermoplastic edge

Prices for Steps 1-4.

			L
HZ380.	**23**	**70**	$795
	30	**70**	$953

Step 5. Grain Direction

HRG	horizontal grain	+$0

OE1 Micro Pack Center Screen, 4-Pack, Laminate *continued*

Step 6. Surface Finish		
125	natural maple (CP)	+$0
126	natural cherry (CP)	+$0
127	walnut (CP)	+$0
139	light ash (CP)	+$0
140	warm ash (CP)	+$0
76	light brown walnut	+$0
8Q	folkstone grey (CP)	+$0
91	white (CP)	+$0
98	studio white (CP)	+$0
CL	cool grey neutral	+$0
G1	graphite (CP)	+$0
HP	light anigre	+$0
LBA	clear on ash (CP)	+$0
LBB	oak on ash (CP)	+$0
LBC	walnut on ash (CP)	+$0
LBF	neutral twill	+$0
LBJ	graphite twill	+$0
LBQ	white twill	+$0
LBR	phantom ecru	+$0
LBS	phantom cocoa	+$0
LBU	medium matte walnut (CP)	+$0
LBV	warm grey teak	+$0
LU	soft white	+$0
WL	warm stone (CP)	+$0
WN	warm grey neutral	+$0

Step 7. Edge Finish		
125	natural maple (CP)	+$0
126	natural cherry (CP)	+$0
127	walnut (CP)	+$0
139	light ash (CP)	+$0
140	warm ash (CP)	+$0
76	light brown walnut	+$0
8Q	folkstone grey (CP)	+$0
91	white (CP)	+$0
98	studio white (CP)	+$0
CL	cool grey neutral	+$0
G1	graphite (CP)	+$0
HF	inner tone light	+$0
HP	light anigre	+$0
LBA	clear on ash (CP)	+$0
LBB	oak on ash (CP)	+$0
LBC	walnut on ash (CP)	+$0
LBF	neutral twill	+$0
LBJ	graphite twill	+$0
LBQ	white twill	+$0
LBR	phantom ecru	+$0
LBS	phantom cocoa	+$0
LBU	medium matte walnut (CP)	+$0
LBV	warm grey teak	+$0
LU	soft white	+$0
UBK	ultra black (CP)	+$0
WL	warm stone (CP)	+$0
WN	warm grey neutral	+$0

OE1 One-Piece Standing Communal Table, Single Sided HZ400S

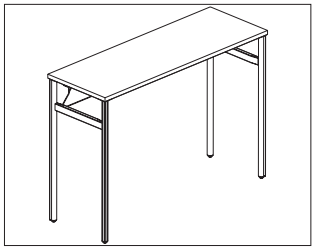

Product Information

Description

This OE1 Workspace Collection™ standing-height, single-sided Communal Table has a laminate top with thermoplastic edge, laminate top with thermoplastic-backed plywood edge, or veneer top and edge. Available with cutouts to accommodate Herman Miller power options that are ordered separately.

Notes

Cutouts for single-sided Communal Table are for rectangular Logic Mini units only.

Counterweights must be specified when using screens with this table. See OE1 planning guide for more information.

Dimensions

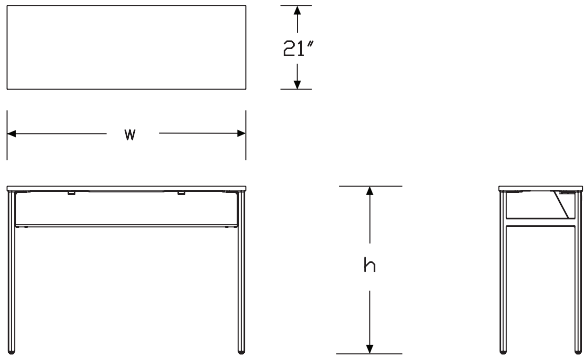

Specification Information

Step 1.

HZ400

Step 2. Edge

S. squared-edge

Step 3. Height

36 36″ high (counter height)
42 42″ high (bar height)

Step 4. Depth

21 21″ deep

Step 5. Width

60 60″ wide
72 72″ wide
96 96″ wide

Step 6. Surface Material

L high-pressure laminate top/thermoplastic edge
U high-pressure laminate/universal edge
W veneer top/veneer edge A
A high-pressure laminate top/thermoplastic edge with MicrobeCare™ A
C high-pressure laminate top/universal edge with MicrobeCare™ A

Prices for Steps 1-6.

			60L	60U	60W	60A	60C	72L
HZ400S.	**36**	**21**	$4385	4385	5349	4488	4488	4659
	42	**21**	$3835	3835	4682	3939	3939	4110

			72U	72W	72A	72C	96L	96U
HZ400S.	**36**	**21**	$4659	5684	4762	4762	4933	4933
	42	**21**	$4110	5014	4212	4212	4385	4385

			96W	96A	96C
HZ400S.	**36**	**21**	$6021	5051	5051
	42	**21**	$5349	4501	4501

Step 7. Power Access Cutout

For 60″ wide (60) or 72″ wide (72)

1	one centered cutout for Logic Mini (rectangle) - Y1414 & Y1412	+$65
2	two cutouts for Logic Mini Vine (rectangle) - Y1415 & Y1412	+$130
N	no cutouts	+$0

For 96″ wide (96)

2	two cutouts for Logic Mini Vine (rectangle) - Y1415 & Y1412	+$130
N	no cutouts	+$0

Step 8. Counterweight

For 60″ wide (60)

F	for use with fabric screen	+$0
M	for use with metal modesty screen	+$80
N	no screen	+$0

For 72″ wide (72)

F	for use with fabric screen	+$80
M	for use with metal modesty screen	+$160
N	no screen	+$0

For 96″ wide (96)

F	for use with fabric screen	+$160
M	for use with metal modesty screen	+$240
N	no screen	+$0

Step 9.

Top Finish

For high-pressure laminate top/thermoplastic edge (L), high-pressure laminate/universal edge (U), high-pressure laminate top/thermoplastic edge with MicrobeCare™ (A), or high-pressure laminate top/universal edge with MicrobeCare™ (C)

125	natural maple (CP) A	+$0
126	natural cherry (CP) A	+$0
127	walnut (CP) A	+$0
139	light ash (CP) A	+$0
140	warm ash (CP) A	+$0
76	light brown walnut	+$0
8Q	folkstone grey (CP)	+$0
91	white (CP)	+$0
98	studio white (CP)	+$0
CL	cool grey neutral	+$0
HF	inner tone light	+$0
HP	light anigre	+$0
LBA	clear on ash (CP)	+$0
LBB	oak on ash (CP)	+$0
LBC	walnut on ash (CP)	+$0
LBF	neutral twill	+$0
LBJ	graphite twill	+$0
LBQ	white twill	+$0
LBR	phantom ecru A	+$0
LBS	phantom cocoa A	+$0
LBU	medium matte walnut (CP) A	+$0
LBV	warm grey teak A	+$0
LT	light tone	+$0
LU	soft white	+$0
UBK	ultra black (CP) A	+$0
WL	warm stone (CP)	+$0
WN	warm grey neutral	+$0

Top/Edge Finish

For veneer top/veneer edge (W)

2U	light brown walnut A	+$200
40	dark brown walnut A	+$200
CHD	noble cherry	+$200
ET	clear on ash A	+$0
EU	oak on ash A	+$0
EV	walnut on ash A	+$0
EW	medium matte walnut A	+$200
OK	white oak (nonstandard) A	+$200
UL	natural maple A	+$0
WHN	natural white oak	+$200

Step 10. Edge Finish

For high-pressure laminate top/thermoplastic edge (L) or high-pressure laminate top/thermoplastic edge with MicrobeCare™ (A)

125	natural maple (CP)	+$0
126	natural cherry (CP)	+$0
127	walnut (CP)	+$0
139	light ash (CP)	+$0
140	warm ash (CP)	+$0
76	light brown walnut	+$0
8Q	folkstone grey (CP)	+$0
91	white (CP)	+$0
98	studio white (CP)	+$0
CL	cool grey neutral	+$0
G1	graphite (CP)	+$0
HF	inner tone light	+$0
HP	light anigre	+$0
LBA	clear on ash (CP)	+$0
LBB	oak on ash (CP)	+$0
LBC	walnut on ash (CP)	+$0
LBF	neutral twill	+$0
LBJ	graphite twill	+$0
LBQ	white twill	+$0
LBR	phantom ecru	+$0
LBS	phantom cocoa	+$0
LBU	medium matte walnut (CP)	+$0
LBV	warm grey teak	+$0
LU	soft white	+$0
UBK	ultra black (CP)	+$0
WL	warm stone (CP)	+$0

For high-pressure laminate/universal edge (U) or high-pressure laminate top/universal edge with MicrobeCare™ (C)

PLY	plywood edge	+$50

Step 11. Base Finish

Metallic Paint

611	beige mist metallic (CP)	+$0
613	silver (CP)	+$0
SNA	satin aluminum	+$135
SNB	satin bronze	+$135
SNC	satin carbon	+$135

Sand Texture Paint

UBK	ultra black (CP)	+$0
8Q	folkstone grey (CP)	+$0
91	white (CP)	+$0
98	studio white (CP)	+$0
BK	black	+$0
G1	graphite (CP)	+$0
WL	warm stone (CP)	+$0
DB3	glacier	+$125
DN2	nightfall	+$125
DR1	canyon	+$125
OLF	olive	+$125

OE1 One-Piece Seated Communal Table, Single Sided

HZ405S

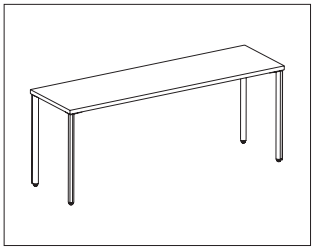

Product Information

Description

This OE1 Workspace Collection™ seated-height, single-sided Communal Table has a laminate top with thermoplastic edge, laminate top with thermoplastic-backed plywood edge, or veneer top and edge. Available with cutouts to accommodate Herman Miller power options that are ordered separately.

Notes

Cutouts for single-sided Communal Table are for rectangular Logic Mini units only.

Table includes stiffener.

Dimensions

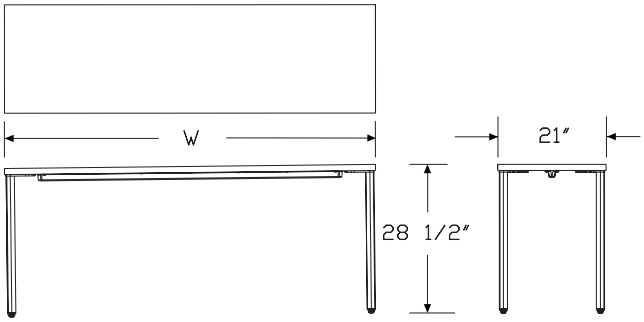

Specification Information

Step 1.

HZ405

Step 2. Edge

S. squared-edge

Step 3. Height

29 28.5″ high (seated height)

Step 4. Depth

21 21″ deep

Step 5. Width

60 60″ wide

72 72″ wide

Step 6. Surface Material

L high-pressure laminate top/thermoplastic edge

U high-pressure laminate/universal edge

W veneer top/veneer edge [A]

A high-pressure laminate top/thermoplastic edge with MicrobeCare™ [A]

C high-pressure laminate top/universal edge with MicrobeCare™ [A]

Prices for Steps 1-6.

	60L	60U	60W	60A	60C	72L
HZ405S. 29 21	$1514	1514	2269	1617	1617	1651

	72U	72W	72A	72C
HZ405S. 29 21	$1651	2474	1754	1754

Step 7. Power Access Cutout

N	no cutouts	+$0
1	one centered cutout for Logic Mini (rectangle) - Y1414 & Y1412	+$65
2	two cutouts for Logic Mini Vine (rectangle) - Y1415 & Y1412	+$130

Step 8.

Top Finish

For high-pressure laminate top/thermoplastic edge (L), high-pressure laminate/universal edge (U), high-pressure laminate top/thermoplastic edge with MicrobeCare™ (A), or high-pressure laminate top/universal edge with MicrobeCare™ (C)

125	natural maple (CP) A	+$0
126	natural cherry (CP) A	+$0
127	walnut (CP) A	+$0
139	light ash (CP) A	+$0
140	warm ash (CP) A	+$0
76	light brown walnut	+$0
8Q	folkstone grey (CP)	+$0
91	white (CP)	+$0
98	studio white (CP)	+$0
CL	cool grey neutral	+$0
HF	inner tone light	+$0
HP	light anigre	+$0
LBA	clear on ash (CP)	+$0
LBB	oak on ash (CP)	+$0
LBC	walnut on ash (CP)	+$0
LBF	neutral twill	+$0
LBJ	graphite twill	+$0
LBQ	white twill	+$0
LBR	phantom ecru A	+$0
LBS	phantom cocoa A	+$0
LBU	medium matte walnut (CP) A	+$0
LBV	warm grey teak A	+$0
LT	light tone	+$0
LU	soft white	+$0
UBK	ultra black (CP) A	+$0
WL	warm stone (CP)	+$0
WN	warm grey neutral	+$0

Top/Edge Finish

For veneer top/veneer edge (W)

2U	light brown walnut A	+$200
40	dark brown walnut A	+$200
CHD	noble cherry	+$200
ET	clear on ash A	+$0
EU	oak on ash A	+$0
EV	walnut on ash A	+$0
EW	medium matte walnut A	+$200
OK	white oak (nonstandard) A	+$200
UL	natural maple A	+$0
WHN	natural white oak	+$200

Step 9. Edge Finish

For high-pressure laminate top/thermoplastic edge (L) or high-pressure laminate top/thermoplastic edge with MicrobeCare™ (A)

125	natural maple (CP)	+$0
126	natural cherry (CP)	+$0
127	walnut (CP)	+$0
139	light ash (CP)	+$0
140	warm ash (CP)	+$0
76	light brown walnut	+$0
8Q	folkstone grey (CP)	+$0
91	white (CP)	+$0
98	studio white (CP)	+$0
CL	cool grey neutral	+$0
G1	graphite (CP)	+$0
HF	inner tone light	+$0
HP	light anigre	+$0
LBA	clear on ash (CP)	+$0
LBB	oak on ash (CP)	+$0
LBC	walnut on ash (CP)	+$0
LBF	neutral twill	+$0
LBJ	graphite twill	+$0
LBQ	white twill	+$0
LBR	phantom ecru	+$0
LBS	phantom cocoa	+$0
LBU	medium matte walnut (CP)	+$0
LBV	warm grey teak	+$0
LU	soft white	+$0
UBK	ultra black (CP)	+$0
WL	warm stone (CP)	+$0

For high-pressure laminate/universal edge (U) or high-pressure laminate top/universal edge with MicrobeCare™ (C)

PLY	plywood edge	+$50

Step 10. Base Finish

Metallic Paint

611	beige mist metallic (CP)	+$0
613	silver (CP)	+$0
SNA	satin aluminum	+$135
SNB	satin bronze	+$135
SNC	satin carbon	+$135

OE1 One-Piece Seated Communal Table, Single Sided *continued*

Sand Texture Paint		
UBK	ultra black (CP)	+$0
8Q	folkstone grey (CP)	+$0
91	white (CP)	+$0
98	studio white (CP)	+$0
BK	black	+$0
G1	graphite (CP)	+$0
WL	warm stone (CP)	+$0
DB3	glacier	+$125
DN2	nightfall	+$125
DR1	canyon	+$125
OLF	olive	+$125

OE1 Two-Piece Standing Communal Table, Single Sided HZ410S

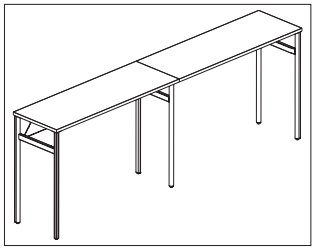

Product Information

Description

This OE1 Workspace Collection™ 2-piece, standing-height, single-sided Communal Table has a laminate top with thermoplastic edge, laminate top with thermoplastic-backed plywood edge, or veneer top and edge. Available with cutouts to accommodate Herman Miller power options that are ordered separately.

Notes

Cutouts for single-sided Communal Table are for rectangular Logic Mini units only.

Counterweights must be specified when using screens with this table. See OE1 planning guide for more information.

Dimensions

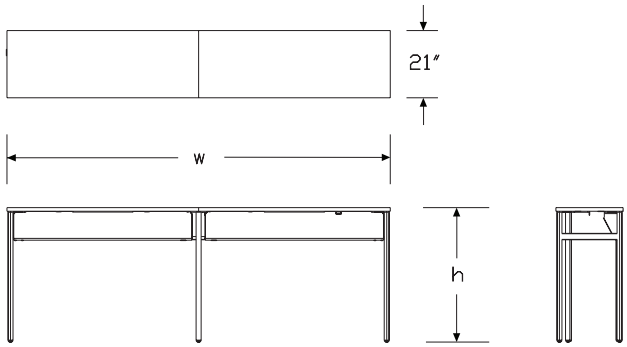

Specification Information

Step 1.

HZ410

Step 2. Edge

S. squared-edge

Step 3. Height

36 36″ high (counter height)
42 42″ high (bar height)

Step 4. Depth

21 21″ deep

Step 5. Width

120 120″ wide
144 144″ wide
192 192″ wide

Step 6. Surface Material

L high-pressure laminate top/thermoplastic edge
U high-pressure laminate/universal edge
W veneer top/veneer edge A
A high-pressure laminate top/thermoplastic edge with MicrobeCare™ A
C high-pressure laminate top/universal edge with MicrobeCare™ A

Prices for Steps 1-6.

			120L	120U	120W	120A	120C	144L
HZ410S.	**36**	**21**	$7341	7341	8953	7546	7546	7615
	42	**21**	$6517	6517	7951	6722	6722	6792

			144U	144W	144A	144C	192L	192U
HZ410S.	**36**	**21**	$7615	9291	7821	7821	7890	7890
	42	**21**	$6792	8285	6997	6997	7067	7067

			192W	192A	192C
HZ410S.	**36**	**21**	$9626	8095	8095
	42	**21**	$8620	7272	7272

Step 7. Power Access Cutout

For 120" wide (120) or 144" wide (144)

N	no cutouts	+$0
2	two cutouts for Logic Mini Vine (rectangle) - Y1415 & Y1412	+$130
4	four cutouts for Logic Mini Vine (rectangle) - Y1415 & Y1412 (2 cutouts in each surface)	+$260

For 192" wide (192)

N	no cutouts	+$0
4	four cutouts for Logic Mini Vine (rectangle) - Y1415 & Y1412 (2 cutouts in each surface)	+$260

Step 8. Counterweight

For 120" wide (120)

F	for use with fabric screen	+$0
M	for use with metal modesty screen	+$160
N	no screen	+$0

For 144" wide (144)

F	for use with fabric screen	+$160
M	for use with metal modesty screen	+$320
N	no screen	+$0

For 192" wide (192)

F	for use with fabric screen	+$320
M	for use with metal modesty screen	+$480
N	no screen	+$0

Step 9.

Top Finish

For high-pressure laminate top/thermoplastic edge (L), high-pressure laminate/universal edge (U), high-pressure laminate top/thermoplastic edge with MicrobeCare™ (A), or high-pressure laminate top/universal edge with MicrobeCare™ (C)

125	natural maple (CP) A	+$0
126	natural cherry (CP) A	+$0
127	walnut (CP) A	+$0
139	light ash (CP) A	+$0
140	warm ash (CP) A	+$0
76	light brown walnut	+$0
8Q	folkstone grey (CP)	+$0
91	white (CP)	+$0
98	studio white (CP)	+$0
CL	cool grey neutral	+$0
HF	inner tone light	+$0
HP	light anigre	+$0
LBA	clear on ash (CP)	+$0
LBB	oak on ash (CP)	+$0
LBC	walnut on ash (CP)	+$0
LBF	neutral twill	+$0
LBJ	graphite twill	+$0
LBQ	white twill	+$0
LBR	phantom ecru A	+$0
LBS	phantom cocoa A	+$0
LBU	medium matte walnut (CP) A	+$0
LBV	warm grey teak A	+$0
LT	light tone	+$0
LU	soft white	+$0
UBK	ultra black (CP) A	+$0
WL	warm stone (CP)	+$0
WN	warm grey neutral	+$0

Top/Edge Finish

For veneer top/veneer edge (W)

2U	light brown walnut A	+$200
40	dark brown walnut A	+$200
CHD	noble cherry	+$200
ET	clear on ash A	+$0
EU	oak on ash A	+$0
EV	walnut on ash A	+$0
EW	medium matte walnut A	+$200
OK	white oak (nonstandard) A	+$200
UL	natural maple A	+$0
WHN	natural white oak	+$200

Step 10. Edge Finish

For high-pressure laminate top/thermoplastic edge (L) or high-pressure laminate top/thermoplastic edge with MicrobeCare™ (A)

125	natural maple (CP)	+$0
126	natural cherry (CP)	+$0
127	walnut (CP)	+$0
139	light ash (CP)	+$0
140	warm ash (CP)	+$0
76	light brown walnut	+$0
8Q	folkstone grey (CP)	+$0
91	white (CP)	+$0
98	studio white (CP)	+$0
CL	cool grey neutral	+$0
G1	graphite (CP)	+$0
HF	inner tone light	+$0
HP	light anigre	+$0
LBA	clear on ash (CP)	+$0
LBB	oak on ash (CP)	+$0
LBC	walnut on ash (CP)	+$0
LBF	neutral twill	+$0
LBJ	graphite twill	+$0
LBQ	white twill	+$0
LBR	phantom ecru	+$0
LBS	phantom cocoa	+$0
LBU	medium matte walnut (CP)	+$0
LBV	warm grey teak	+$0
LU	soft white	+$0
UBK	ultra black (CP)	+$0
WL	warm stone (CP)	+$0

For high-pressure laminate/universal edge (U) or high-pressure laminate top/universal edge with MicrobeCare™ (C)

PLY	plywood edge	+$50

Step 11. Base Finish

Metallic Paint

611	beige mist metallic (CP)	+$0
613	silver (CP)	+$0
SNA	satin aluminum	+$135
SNB	satin bronze	+$135
SNC	satin carbon	+$135

Sand Texture Paint

UBK	ultra black (CP)	+$0
8Q	folkstone grey (CP)	+$0
91	white (CP)	+$0
98	studio white (CP)	+$0
BK	black	+$0
G1	graphite (CP)	+$0
WL	warm stone (CP)	+$0
DB3	glacier	+$125
DN2	nightfall	+$125
DR1	canyon	+$125
OLF	olive	+$125

OE1 Communal Table Metal Screen, Surface Attached with Modesty HZ420.

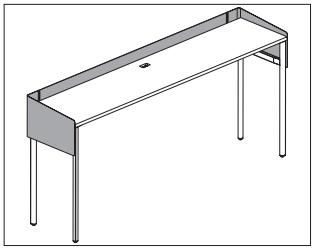

Product Information

Description

This metal screen attaches to the surface of a single-sided OE1 Workspace Collection™ Communal Table. It provides boundary above and modesty below the surface. Attachment hardware included.

Notes

Screen extends 3″ above and 10″ below the surface.

Dimensions

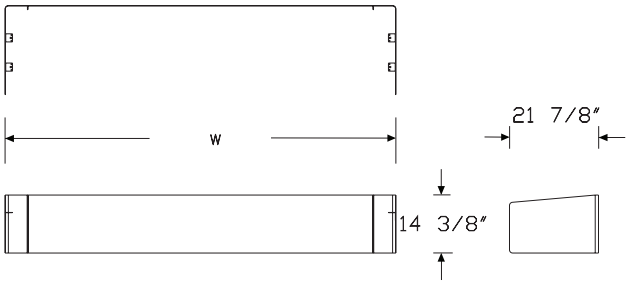

Specification Information

Step 1.

HZ420.

Step 2. Height

3	3″ above surface/10″ below surface

Step 3. Communal Table Width

60	60″ wide (for use with 1 piece work bar)
72	72″ wide (for use with 1 piece work bar)
96	96″ wide (for use with 1 piece work bar)
120	120″ wide (for use with 2 piece work bar)
144	144″ wide (for use with 2 piece work bar)
192	192″ wide (for use with 2 piece work bar)

Prices for Steps 1-3.

		60	72	96	120	144	192
HZ420.	**3**	$965	1172	1375	1651	1856	2061

Step 4. Screen Finish

Metallic Paint

For 120″ wide (for use with 2 piece work bar) (120), 144″ wide (for use with 2 piece work bar) (144), or 192″ wide (for use with 2 piece work bar) (192)

611	beige mist metallic (CP)	+$0
613	silver (CP)	+$0
SNA	satin aluminum	+$135
SNB	satin bronze	+$135
SNC	satin carbon	+$135

Sand Texture Paint

For 120″ wide (for use with 2 piece work bar) (120), 144″ wide (for use with 2 piece work bar) (144), or 192″ wide (for use with 2 piece work bar) (192)

8Q	folkstone grey (CP)	+$0
91	white (CP)	+$0
98	studio white (CP)	+$0
BK	black	+$0
DB3	glacier	+$125
DN2	nightfall	+$125
DR1	canyon	+$125
OLF	olive	+$125
UBK	ultra black (CP)	+$0

OE1 Communal Table Metal Screen, Surface Attached with Modesty

continued

Metallic Paint

For 60″ wide (for use with 1 piece work bar) (60), 72″ wide (for use with 1 piece work bar) (72), or 96″ wide (for use with 1 piece work bar) (96)

611	beige mist metallic (CP)	+$0
613	silver (CP)	+$0
SNA	satin aluminum	+$60
SNB	satin bronze	+$60
SNC	satin carbon	+$60

Sand Texture Paint

For 60″ wide (for use with 1 piece work bar) (60), 72″ wide (for use with 1 piece work bar) (72), or 96″ wide (for use with 1 piece work bar) (96)

8Q	folkstone grey (CP)	+$0
91	white (CP)	+$0
98	studio white (CP)	+$0
BK	black	+$0
DB3	glacier	+$50
DN2	nightfall	+$50
DR1	canyon	+$50
OLF	olive	+$50
UBK	ultra black (CP)	+$0

OE1 Communal Table Flat Edge Screen, Surface Attached with Modesty

HZ430.

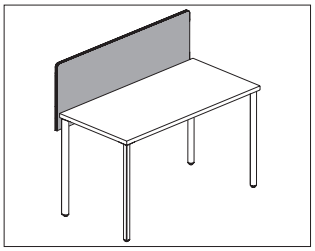

Product Information

Description

This tackable fabric screen attaches to the surface of an OE1 Workspace Collection™ Communal Table. It provides boundary above and modesty below the surface. Attachment hardware included.

Notes

Screen accepts Customer's Own Material (COM). Yardage is estimated for nondirectional, 54″ wide fabrics.

For vertical fabric direction (T, E):

Width—Yardage

48—1.70

For horizontal fabric direction (R, D):

Width—Yardage

48—1.76

60—2.08

72—2.46

For information on multiple quantities or directional fabrics, contact COM Department. See Order Information in appendices.

Dimensions

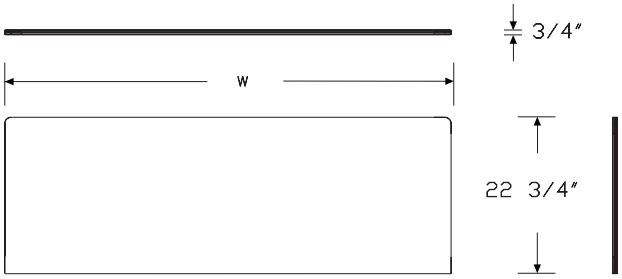

Specification Information

Step 1.

HZ430.

Step 2. Attachment

W communal table surface attached

Step 3. Height

14 14″ above surface/ 9″ below surface

Step 4. Width

48 48″ wide

60 60″ wide

72 72″ wide

Step 5. Surface Material

For 48″ wide (48)

T tackable fabric

R tackable fabric, horizontal

D tackable fabric, horizontal with MicrobeCare™

E tackable fabric with MicrobeCare™

For 60″ wide (60) or 72″ wide (72)

R tackable fabric, horizontal

D tackable fabric, horizontal with MicrobeCare™

Prices for Steps 1-5.

	48T	48R	48D	48E	60R	60D
HZ430. W 14	$878	878	960	960	1011	1096

	72R	72D
HZ430. W 14	$1231	1313

Step 6. Bracket Finish

G1 graphite (CP) +$0

OE1 Communal Table Flat Edge Screen, Surface Attached with Modesty *continued*

Step 7. Fabric	
For 48″ wide (48)	
Price Category B	+$373
Price Category 1	+$0
Price Category 2	+$48
Price Category 3	+$118
Price Category 4	+$209
Price Category 5	+$355
Price Category C	+$506
Price Category E	+$764
For 60″ wide (60)	
Price Category B	+$457
Price Category 1	+$0
Price Category 2	+$60
Price Category 3	+$144
Price Category 4	+$256
Price Category 5	+$436
Price Category C	+$619
Price Category E	+$935
For 72″ wide (72)	
Price Category B	+$539
Price Category 1	+$0
Price Category 2	+$70
Price Category 3	+$169
Price Category 4	+$301
Price Category 5	+$514
Price Category C	+$730
Price Category E	+$1103

OE1 Communal Table Pari Screen, Surface Attached with Modesty HZ440.

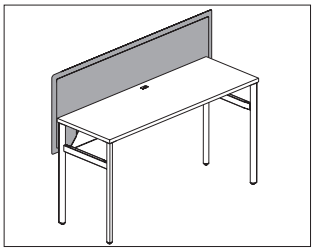

Product Information

Description

This tackable Pari fabric screen attaches to the surface of an OE1 Workspace Collection™ Communal Table. It provides boundary above and modesty below the surface. Attachment hardware included.

Notes

Screen accepts Customer's Own Material (COM). Yardage is estimated for nondirectional, 54″ wide fabrics.

For vertical fabric direction (T, E):

Width—Yardage

48—1.70

For horizontal fabric direction (R, D):

Width—Yardage

48—1.76

60—2.08

72—2.46

For information on multiple quantities or directional fabrics, contact COM Department. See Order Information in appendices.

Dimensions

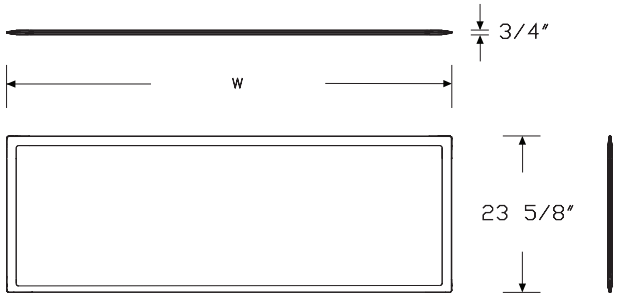

Specification Information

Step 1.

HZ440.

Step 2. Attachment

W communal table surface attached

Step 3. Height

14 14″ above surface/ 9″ below surface

Step 4. Width

48 48″ wide

60 60″ wide

72 72″ wide

Step 5. Surface Material

For 48″ wide (48)

T tackable fabric

R tackable fabric, horizontal

D tackable fabric, horizontal with MicrobeCare™

E tackable fabric with MicrobeCare™

For 60″ wide (60) or 72″ wide (72)

R tackable fabric, horizontal

D tackable fabric, horizontal with MicrobeCare™

Prices for Steps 1-5.

	48T	48R	48D	48E	60R	60D
HZ440. W 14	$1213	1213	1297	1297	1416	1499

	72R	72D
HZ440. W 14	$1562	1646

Step 6. Bracket Finish

UBK ultra black (CP) +$0

OE1 Communal Table Pari Screen, Surface Attached with Modesty

continued

Step 7. Fabric	
For 48″ wide (48)	
Price Category B	+$373
Price Category 1	+$0
Price Category 2	+$48
Price Category 3	+$118
Price Category 4	+$209
Price Category 5	+$355
Price Category C	+$506
Price Category E	+$764
For 60″ wide (60)	
Price Category 5	+$436
Price Category B	+$457
Price Category 1	+$0
Price Category 2	+$60
Price Category 3	+$144
Price Category 4	+$256
Price Category C	+$619
Price Category E	+$935
For 72″ wide (72)	
Price Category B	+$539
Price Category 1	+$0
Price Category 2	+$70
Price Category 3	+$169
Price Category 4	+$301
Price Category C	+$730
Price Category E	+$1103

OE1 One-Piece Standing Communal Table, Double Sided HZ450S

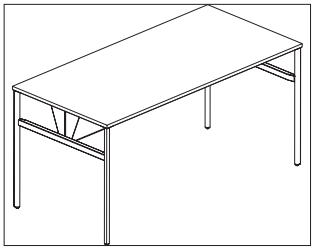

Product Information

Description

This OE1 Workspace Collection™ standing-height, double-sided Communal Table has a laminate top with thermoplastic edge, laminate top with thermoplastic-backed plywood edge, or veneer top and edge. Available with cutouts to accommodate Herman Miller power options that are ordered separately.

Dimensions

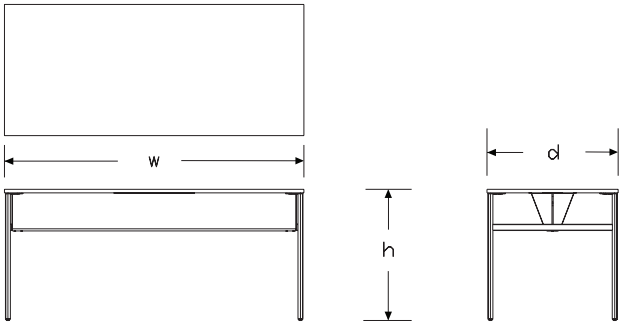

Specification Information

Step 1.

HZ450

Step 2. Edge

S. squared-edge

Step 3. Height

36 36″ high (counter height)
42 42″ high (bar height)

Step 4. Depth

30 30″ deep
42 42″ deep

Step 5. Width

60 60″ wide
72 72″ wide
96 96″ wide

Step 6. Surface Material

L high-pressure laminate top/thermoplastic edge
U high-pressure laminate/universal edge
W veneer top/veneer edge A
A high-pressure laminate top/thermoplastic edge with MicrobeCare™ A
C high-pressure laminate top/universal edge with MicrobeCare™ A

Prices for Steps 1-6.

			60L	60U	60W	60A	60C	72L
HZ450S.	**36**	**30**	$4583	4583	5957	4686	4686	4857
		42	$5130	5130	6670	5235	5235	5405
	42	**30**	$4067	4067	5287	4170	4170	4341
		42	$4615	4615	6001	4719	4719	4891

			72U	72W	72A	72C	96L	96U
HZ450S.	**36**	**30**	$4857	6312	4960	4960	5130	5130
		42	$5405	7027	5508	5508	5681	5681
	42	**30**	$4341	5644	4444	4444	4643	4643
		42	$4891	6357	4994	4994	5200	4643

			96W	96A	96C
HZ450S.	**36**	**30**	$6670	5247	5247
		42	$7384	5796	5796
	42	**30**	$6036	4761	4761
		42	$6760	5317	5317

Step 7. Power Access Cutout

For 30″ deep (30) with 60″ wide (60)

NC	no cutout	+$0
C1	one center cutout for Logic Mini (rectangle) - Y1414 and Y1412.1	+$65
C2	one center cutout for Logic Mini (square) - Y1414 and Y1412.2	+$65

For 42″ deep (42) with 60″ wide (60)

NC	no cutout	+$0
C1	one center cutout for Logic Mini (rectangle) - Y1414 and Y1412.1	+$65
C2	one center cutout for Logic Mini (square) - Y1414 and Y1412.2	+$65
L3	one center cutout for logic Y1425 3 port	+$65
L5	one center cutout for logic Y1425 5 port	+$65
L6	one center cutout for logic Y1425 6 port	+$65
TB	one center cutout for technology bucket	+$190

For 30″ deep (30) with 72″ wide (72), or 96″ wide (96)

NC	no cutout	+$0
C3	two cutouts for logic mini (rectangle) - Y1415 and Y1412.1	+$130
C4	two cutouts for logic mini (square) - Y1415 and Y1412.2	+$130

For 42″ deep (42) with 72″ wide (72), or 96″ wide (96)

NC	no cutout	+$0
C3	two cutouts for logic mini (rectangle) - Y1415 and Y1412.1	+$130
C4	two cutouts for logic mini (square) - Y1415 and Y1412.2	+$130
L3	one center cutout for logic Y1425 3 port	+$65
L5	one center cutout for logic Y1425 5 port	+$65
L6	one center cutout for logic Y1425 6 port	+$65
TB	one center cutout for technology bucket	+$190

Step 8.

Top Finish

For high-pressure laminate top/thermoplastic edge (L), high-pressure laminate/universal edge (U), high-pressure laminate top/thermoplastic edge with MicrobeCare™ (A), or high-pressure laminate top/universal edge with MicrobeCare™ (C)

125	natural maple (CP) A	+$0
126	natural cherry (CP) A	+$0
127	walnut (CP) A	+$0
139	light ash (CP) A	+$0
140	warm ash (CP) A	+$0
76	light brown walnut	+$0
8Q	folkstone grey (CP)	+$0
91	white (CP)	+$0
98	studio white (CP)	+$0
CL	cool grey neutral	+$0
HF	inner tone light	+$0
HP	light anigre	+$0
LBA	clear on ash (CP)	+$0
LBB	oak on ash (CP)	+$0
LBC	walnut on ash (CP)	+$0
LBF	neutral twill	+$0
LBJ	graphite twill	+$0
LBQ	white twill	+$0
LBR	phantom ecru A	+$0
LBS	phantom cocoa A	+$0
LBU	medium matte walnut (CP) A	+$0
LBV	warm grey teak A	+$0
LT	light tone	+$0
LU	soft white	+$0
UBK	ultra black (CP) A	+$0
WL	warm stone (CP)	+$0
WN	warm grey neutral	+$0

Top/Edge Finish

For veneer top/veneer edge (W)

2U	light brown walnut A	+$200
40	dark brown walnut A	+$200
CHD	noble cherry	+$200
ET	clear on ash A	+$0
EU	oak on ash A	+$0
EV	walnut on ash A	+$0
EW	medium matte walnut A	+$200
OK	white oak (nonstandard) A	+$200
UL	natural maple A	+$0
WHN	natural white oak	+$200

Step 9. Edge Finish

For high-pressure laminate top/thermoplastic edge (L) or high-pressure laminate top/thermoplastic edge with MicrobeCare™ (A)

125	natural maple (CP)	+$0
126	natural cherry (CP)	+$0
127	walnut (CP)	+$0
139	light ash (CP)	+$0
140	warm ash (CP)	+$0
76	light brown walnut	+$0
8Q	folkstone grey (CP)	+$0
91	white (CP)	+$0
98	studio white (CP)	+$0
CL	cool grey neutral	+$0
G1	graphite (CP)	+$0
HF	inner tone light	+$0
HP	light anigre	+$0
LBA	clear on ash (CP)	+$0
LBB	oak on ash (CP)	+$0
LBC	walnut on ash (CP)	+$0
LBF	neutral twill	+$0
LBJ	graphite twill	+$0
LBQ	white twill	+$0
LBR	phantom ecru	+$0
LBS	phantom cocoa	+$0
LBU	medium matte walnut (CP)	+$0
LBV	warm grey teak	+$0
LU	soft white	+$0
UBK	ultra black (CP)	+$0
WL	warm stone (CP)	+$0

For high-pressure laminate/universal edge (U) or high-pressure laminate top/universal edge with MicrobeCare™ (C)

PLY	plywood edge	+$50

Step 10. Base Finish

Metallic Paint

611	beige mist metallic (CP)	+$0
613	silver (CP)	+$0
SNA	satin aluminum	+$135
SNB	satin bronze	+$135
SNC	satin carbon	+$135

Sand Texture Paint

UBK	ultra black (CP)	+$0
8Q	folkstone grey (CP)	+$0
91	white (CP)	+$0
98	studio white (CP)	+$0
BK	black	+$0
G1	graphite (CP)	+$0
WL	warm stone (CP)	+$0
DB3	glacier	+$125
DN2	nightfall	+$125
DR1	canyon	+$125
OLF	olive	+$125

Step 11. Base Type

For 30″ deep (30)

G	glides	+$0

For 42″ deep (42)

C	casters	+$40
G	glides	+$0

OE1 Leg Cable Manager for Communal Tables

HZ480.

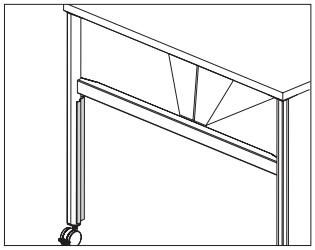

Product Information

Description

This cable manager routes cables from the underside of a standing height or counter height OE1 Workspace Collection™ table down to the floor. The kit includes the cable manager and a cord bracket that attaches to the leg plate.

Notes

Cable manager can hold 2 cords.

Cable manager can be used on standing-height and counter-height OE1 Communal Tables. See OE1 planning guide for application information.

Dimensions

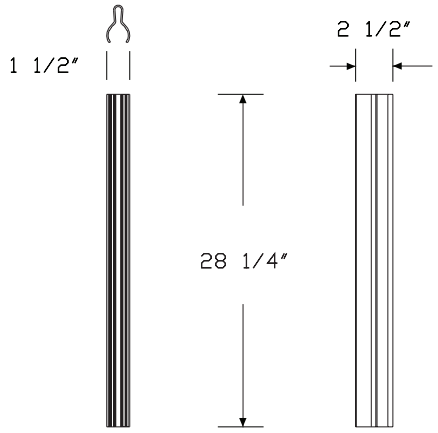

Specification Information

Step 1.

HZ480.

Step 2. Cable Manager Height

28	28″ high

Prices for Steps 1-2.

HZ480. 28		$125

Step 3. Finish

8Q	folkstone grey (CP)	+$0
BK	black	+$0
DB3	glacier	+$20
DN2	nightfall	+$20
DR1	canyon	+$20
OLF	olive	+$20
UBK	ultra black (CP)	+$0

OE1 Three-Piece Standing Communal Table, Double Sided

HZ470S

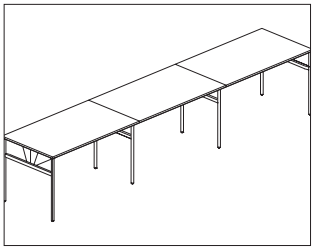

Product Information

Description

This OE1 Workspace Collection™ 3-piece, standing-height, double-sided Communal Table has a laminate top with thermoplastic edge, laminate top with thermoplastic-backed plywood edge, or veneer top and edge. Available with cutouts to accommodate Herman Miller power options that are ordered separately.

Dimensions

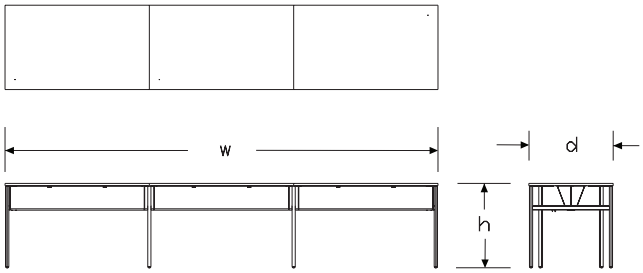

Specification Information

Step 1.

HZ470

Step 2. Edge

S. squared-edge

Step 3. Height

36 36″ high (counter height)

42 42″ high (bar height)

Step 4. Depth

30 30″ deep

42 42″ deep

Step 5. Width

180 180″ wide

216 216″ wide

Step 6. Surface Material

L high-pressure laminate top/thermoplastic edge

U high-pressure laminate/universal edge

W veneer top/veneer edge [A]

A high-pressure laminate top/thermoplastic edge with MicrobeCare™ [A]

C high-pressure laminate top/universal edge with MicrobeCare™ [A]

Prices for Steps 1-6.

			180L	180U	180W	180A	180C	216L
HZ470S.	**36**	**30**	$12566	12566	16334	12874	12874	13389
		42	$13116	13116	17048	13425	13425	13940
	42	**30**	$11273	11273	14654	11582	11582	12097
		42	$11822	11822	15365	12130	12130	12646

			216U	216W	216A	216C
HZ470S.	**36**	**30**	$13389	17407	13698	13698
		42	$13940	18119	14246	14246
	42	**30**	$12097	15724	12406	12406
		42	$12646	16438	12956	12956

OE1 Three-Piece Standing Communal Table, Double Sided

continued

Step 7. Power Access Cutout

For 30″ deep (30) with 180″ wide (180)

NC	no cutout	+$0
C1	three center cutouts for logic mini (rectangle) - Y1415 and Y1412.1	+$195
C2	three center cutouts for logic mini (square) - Y1415 and Y1412.2	+$195

For 42″ deep (42) with 180″ wide (180)

NC	no cutout	+$0
C1	three center cutouts for logic mini (rectangle) - Y1415 and Y1412.1	+$195
C2	three center cutouts for logic mini (square) - Y1415 and Y1412.2	+$195
L3	three center cutout for logic Y1425 3 port (1 centered cutout in each surface)	+$195
L5	three center cutout for logic Y1425 5 port (1 centered cutout in each surface)	+$195
L6	three center cutout for logic Y1425 6 port (1 centered cutout in each surface)	+$195
TB	three center cutout for technology bucket (1 centered cutout in each surface)	+$570
LS	three cutouts for left logic Y1425 5 port, center technology bucket, right logic Y1425 5 port	+$320

For 30″ deep (30) with 216″ wide (216)

NC	no cutout	+$0
C3	six cutouts for logic mini (rectangle) - Y1415 and Y1412.1 (2 cutouts in each surface)	+$390
C4	six cutouts for logic mini (square) - Y1415 and Y1412.1 (2 cutouts in each surface)	+$390

For 42″ deep (42) with 216″ wide (216)

NC	no cutout	+$0
C3	six cutouts for logic mini (rectangle) - Y1415 and Y1412.1 (2 cutouts in each surface)	+$390
C4	six cutouts for logic mini (square) - Y1415 and Y1412.1 (2 cutouts in each surface)	+$390
L3	three center cutout for logic Y1425 3 port (1 centered cutout in each surface)	+$195
L5	three center cutout for logic Y1425 5 port (1 centered cutout in each surface)	+$195
L6	three center cutout for logic Y1425 6 port (1 centered cutout in each surface)	+$195
TB	three center cutout for technology bucket (1 centered cutout in each surface)	+$570
LT	three cutouts for left logic Y1425 6 port, center techology bucket, right logic Y1425 6 port	+$320

OE1 Three-Piece Standing Communal Table, Double Sided

continued

Step 8.

Top Finish

For high-pressure laminate top/thermoplastic edge (L), high-pressure laminate/universal edge (U), high-pressure laminate top/thermoplastic edge with MicrobeCare™ (A), or high-pressure laminate top/universal edge with MicrobeCare™ (C)

125	natural maple (CP) A	+$0
126	natural cherry (CP) A	+$0
127	walnut (CP) A	+$0
139	light ash (CP) A	+$0
140	warm ash (CP) A	+$0
76	light brown walnut	+$0
8Q	folkstone grey (CP)	+$0
91	white (CP)	+$0
98	studio white (CP)	+$0
CL	cool grey neutral	+$0
HF	inner tone light	+$0
HP	light anigre	+$0
LBA	clear on ash (CP)	+$0
LBB	oak on ash (CP)	+$0
LBC	walnut on ash (CP)	+$0
LBF	neutral twill	+$0
LBJ	graphite twill	+$0
LBQ	white twill	+$0
LBR	phantom ecru A	+$0
LBS	phantom cocoa A	+$0
LBU	medium matte walnut (CP) A	+$0
LBV	warm grey teak A	+$0
LT	light tone	+$0
LU	soft white	+$0
UBK	ultra black (CP) A	+$0
WL	warm stone (CP)	+$0
WN	warm grey neutral	+$0

Top/Edge Finish

For veneer top/veneer edge (W)

2U	light brown walnut A	+$200
40	dark brown walnut A	+$200
CHD	noble cherry	+$200
ET	clear on ash A	+$0
EU	oak on ash A	+$0
EV	walnut on ash A	+$0
EW	medium matte walnut A	+$200
OK	white oak (nonstandard) A	+$200
UL	natural maple A	+$0
WHN	natural white oak	+$200

Step 9. Edge Finish

For high-pressure laminate top/thermoplastic edge (L) or high-pressure laminate top/thermoplastic edge with MicrobeCare™ (A)

125	natural maple (CP)	+$0
126	natural cherry (CP)	+$0
127	walnut (CP)	+$0
139	light ash (CP)	+$0
140	warm ash (CP)	+$0
76	light brown walnut	+$0
8Q	folkstone grey (CP)	+$0
91	white (CP)	+$0
98	studio white (CP)	+$0
CL	cool grey neutral	+$0
G1	graphite (CP)	+$0
HF	inner tone light	+$0
HP	light anigre	+$0
LBA	clear on ash (CP)	+$0
LBB	oak on ash (CP)	+$0
LBC	walnut on ash (CP)	+$0
LBF	neutral twill	+$0
LBJ	graphite twill	+$0
LBQ	white twill	+$0
LBR	phantom ecru	+$0
LBS	phantom cocoa	+$0
LBU	medium matte walnut (CP)	+$0
LBV	warm grey teak	+$0
LU	soft white	+$0
UBK	ultra black (CP)	+$0
WL	warm stone (CP)	+$0

For high-pressure laminate/universal edge (U) or high-pressure laminate top/universal edge with MicrobeCare™ (C)

PLY	plywood edge	+$50

Step 10. Base Finish

Metallic Paint

611	beige mist metallic (CP)	+$0
613	silver (CP)	+$0
SNA	satin aluminum	+$260
SNB	satin bronze	+$260
SNC	satin carbon	+$260

OE1 Three-Piece Standing Communal Table, Double Sided

continued

Sand Texture Paint		
UBK	ultra black (CP)	+$0
8Q	folkstone grey (CP)	+$0
91	white (CP)	+$0
98	studio white (CP)	+$0
BK	black	+$0
G1	graphite (CP)	+$0
WL	warm stone (CP)	+$0
DB3	glacier	+$250
DN2	nightfall	+$250
DR1	canyon	+$250
OLF	olive	+$250

OE1 Two-Piece Standing Communal Table, Double Sided HZ460S

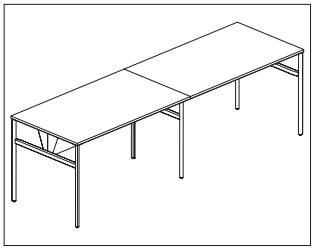

Product Information

Description

This OE1 Workspace Collection™ standing-height, double-sided Communal Table has a laminate top with thermoplastic edge, laminate top with thermoplastic-backed plywood edge, or veneer top and edge. Available with cutouts to accommodate Herman Miller power options that are ordered separately.

Dimensions

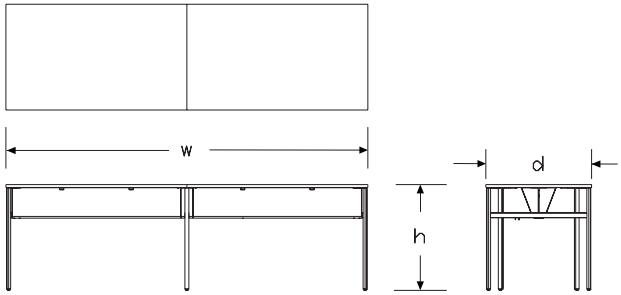

Specification Information

Step 1.

HZ460

Step 2. Edge

S. squared-edge

Step 3. Height

36 36″ high (counter height)
42 42″ high (bar height)

Step 4. Depth

30 30″ deep
42 42″ deep

Step 5. Width

120 120″ wide
144 144″ wide
192 192″ wide

Step 6. Surface Material

L high-pressure laminate top/thermoplastic edge
U high-pressure laminate/universal edge
W veneer top/veneer edge A
A high-pressure laminate top/thermoplastic edge with MicrobeCare™ A
C high-pressure laminate top/universal edge with MicrobeCare™ A

Prices for Steps 1-6.

			120L	120U	120W	120A	120C	144L
HZ460S.	**36**	**30**	$9064	9064	11783	9271	9271	9201
		42	$9613	9613	12497	9820	9820	9752
	42	**30**	$8101	8101	10533	8308	8308	8237
		42	$8650	8650	11245	8856	8856	8786

			144U	144W	144A	144C	192L	192U
HZ460S.	**36**	**30**	$9201	11962	9408	9408	9752	9752
		42	$9752	12675	9957	9957	10300	10300
	42	**30**	$8237	10709	8445	8445	8786	8786
		42	$8786	11424	8994	8994	9336	9336

			192W	192A	192C
HZ460S.	**36**	**30**	$12675	9984	9984
		42	$13389	10535	10535
	42	**30**	$11424	9021	9021
		42	$12137	9570	9570

Step 7. Power Access Cutout

For 30″ deep (30) with 120″ wide (120)

NC	no cutout	+$0
C5	two cutouts for logic mini (rectangle) - Y1415 and Y1412.1 (1 centered cutout in each surface)	+$130
C6	two cutouts for logic mini (square) - Y1415 and Y1412.1 (1 centered cutout in each surface)	+$130

For 42″ deep (42) with 120″ wide (120)

NC	no cutout	+$0
C5	two cutouts for logic mini (rectangle) - Y1415 and Y1412.1 (1 centered cutout in each surface)	+$130
C6	two cutouts for logic mini (square) - Y1415 and Y1412.1 (1 centered cutout in each surface)	+$130
L3	two cutouts for logic Y1425 3 port (1 centered cutout in each surface)	+$130
L5	two cutouts for logic Y1425 5 port (1 centered cutout in each surface)	+$130
L6	two cutouts for logic Y1425 6 port (1 centered cutout in each surface)	+$130
TB	two cutouts for technology bucket (1 centered cutout in each surface)	+$380

For 30″ deep (30) with 144″ wide (144), or 192″ wide (192)

NC	no cutout	+$0
C7	four cutouts for logic mini (rectangle) - Y1415 and Y1412.1 (2 cutouts in each surface)	+$260
C8	four cutouts for logic mini (square) - Y1415 and Y1412.2 (2 cutouts in each surface)	+$260

For 42″ deep (42) with 144″ wide (144), or 192″ wide (192)

NC	no cutout	+$0
C7	four cutouts for logic mini (rectangle) - Y1415 and Y1412.1 (2 cutouts in each surface)	+$260
C8	four cutouts for logic mini (square) - Y1415 and Y1412.2 (2 cutouts in each surface)	+$260
L3	two cutouts for logic Y1425 3 port (1 centered cutout in each surface)	+$130
L5	two cutouts for logic Y1425 5 port (1 centered cutout in each surface)	+$130
L6	two cutouts for logic Y1425 6 port (1 centered cutout in each surface)	+$130
TB	two cutouts for technology bucket (1 centered cutout in each surface)	+$380

Step 8.

Top Finish

For high-pressure laminate top/thermoplastic edge (L), high-pressure laminate/universal edge (U), high-pressure laminate top/thermoplastic edge with MicrobeCare™ (A), or high-pressure laminate top/universal edge with MicrobeCare™ (C)

125	natural maple (CP) A	+$0
126	natural cherry (CP) A	+$0
127	walnut (CP) A	+$0
139	light ash (CP) A	+$0
140	warm ash (CP) A	+$0
76	light brown walnut	+$0
8Q	folkstone grey (CP)	+$0
91	white (CP)	+$0
98	studio white (CP)	+$0
CL	cool grey neutral	+$0
HF	inner tone light	+$0
HP	light anigre	+$0
LBA	clear on ash (CP)	+$0
LBB	oak on ash (CP)	+$0
LBC	walnut on ash (CP)	+$0
LBF	neutral twill	+$0
LBJ	graphite twill	+$0
LBQ	white twill	+$0
LBR	phantom ecru A	+$0
LBS	phantom cocoa A	+$0
LBU	medium matte walnut (CP) A	+$0
LBV	warm grey teak A	+$0
LT	light tone	+$0
LU	soft white	+$0
UBK	ultra black (CP) A	+$0
WL	warm stone (CP)	+$0
WN	warm grey neutral	+$0

Top/Edge Finish

For veneer top/veneer edge (W)

2U	light brown walnut A	+$200
40	dark brown walnut A	+$200
CHD	noble cherry	+$200
ET	clear on ash A	+$0
EU	oak on ash A	+$0
EV	walnut on ash A	+$0
EW	medium matte walnut A	+$200
OK	white oak (nonstandard) A	+$200
UL	natural maple A	+$0
WHN	natural white oak	+$200

Step 9. Edge Finish

For high-pressure laminate top/thermoplastic edge (L) or high-pressure laminate top/thermoplastic edge with MicrobeCare™ (A)

125	natural maple (CP)	+$0
126	natural cherry (CP)	+$0
127	walnut (CP)	+$0
139	light ash (CP)	+$0
140	warm ash (CP)	+$0
76	light brown walnut	+$0
8Q	folkstone grey (CP)	+$0
91	white (CP)	+$0
98	studio white (CP)	+$0
CL	cool grey neutral	+$0
G1	graphite (CP)	+$0
HF	inner tone light	+$0
HP	light anigre	+$0
LBA	clear on ash (CP)	+$0
LBB	oak on ash (CP)	+$0
LBC	walnut on ash (CP)	+$0
LBF	neutral twill	+$0
LBJ	graphite twill	+$0
LBQ	white twill	+$0
LBR	phantom ecru	+$0
LBS	phantom cocoa	+$0
LBU	medium matte walnut (CP)	+$0
LBV	warm grey teak	+$0
LU	soft white	+$0
UBK	ultra black (CP)	+$0
WL	warm stone (CP)	+$0

For high-pressure laminate/universal edge (U) or high-pressure laminate top/universal edge with MicrobeCare™ (C)

PLY	plywood edge	+$50

Step 10. Base Finish

Metallic Paint

611	beige mist metallic (CP)	+$0
613	silver (CP)	+$0
SNA	satin aluminum	+$185
SNB	satin bronze	+$185
SNC	satin carbon	+$185

Sand Texture Paint

UBK	ultra black (CP)	+$0
8Q	folkstone grey (CP)	+$0
91	white (CP)	+$0
98	studio white (CP)	+$0
BK	black	+$0
G1	graphite (CP)	+$0
WL	warm stone (CP)	+$0
DB3	glacier	+$175
DN2	nightfall	+$175
DR1	canyon	+$175
OLF	olive	+$175

OE1 Teardrop Leg HZ500.

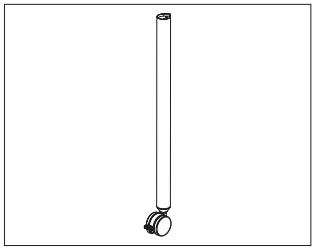

Product Information

Description

This single leg supports 1 corner of a surface. It can be specified with a glide or locking caster. Attachment hardware included. Package contains 1 leg.

Dimensions

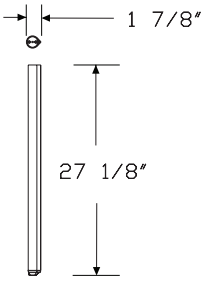

Specification Information

Step 1.

HZ500.	$211

Step 2. Leg Finish

Metallic Paint

611	beige mist metallic (CP)	+$0
613	silver (CP)	+$0
SNA	satin aluminum	+$35
SNB	satin bronze	+$35
SNC	satin carbon	+$35

Sand Texture Paint

UBK	ultra black (CP)	+$0
8Q	folkstone grey (CP)	+$0
91	white (CP)	+$0
98	studio white (CP)	+$0
BK	black	+$0
G1	graphite (CP)	+$0
WL	warm stone (CP)	+$0
DB3	glacier	+$30
DN2	nightfall	+$30
DR1	canyon	+$30
OLF	olive	+$30

Step 3. Base Type

C	casters	+$0
G	glides	+$0

OE1 Worksurface, Rectangle HZ505S

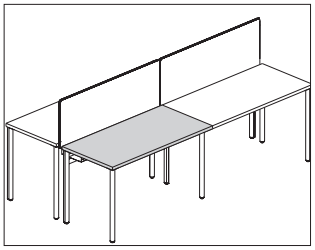

Product Information

Description

This surface attaches to OE1 Workspace Collection™ Teardrop Legs to create a freestanding rectangular table or can be ganged together to create a bench. It has a laminate top with thermoplastic edge, laminate top with thermoplastic-backed plywood edge, or veneer top and edge. Laminate and veneer surfaces are 1¼″ thick.

Notes

MicrobeCare™ is an antimicrobial coating applied to the laminate or veneer surface of this product.

MicrobeCare protects products from mold, mildew, algae, and bacteria that cause deterioration, discoloration, odors, and stains.

MicrobeCare is registered with the US Environmental Protection Agency (EPA).

Stiffener (HZ510.) is required for any laminate or veneer surface 54″ wide or wider. See the OE1 planning guide for specific stiffener guidelines. Stiffener is ordered separately.

Dimensions

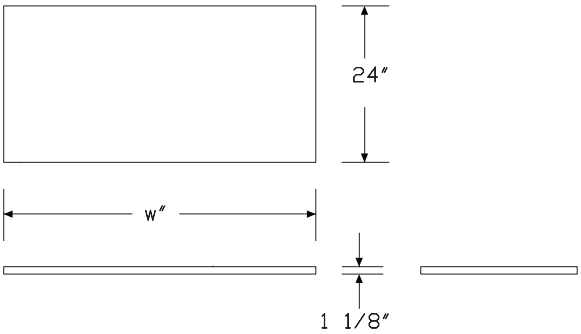

Specification Information

Step 1.

HZ505

Step 2. Edge

S. squared-edge

Step 3. Depth

18 18″ deep
24 24″ deep
30 30″ deep

Step 4. Width

For 18″ deep (18)

48 48″ wide
60 60″ wide
72 72″ wide

For 24″ deep (24) or 30″ deep (30)

36 36″ wide
42 42″ wide
48 48″ wide
54 54″ wide
60 60″ wide
66 66″ wide
72 72″ wide

Step 5. Surface Material

L high-pressure laminate top/thermoplastic edge
U high-pressure laminate/universal edge
W veneer top/veneer edge A
A high-pressure laminate top/thermoplastic edge with MicrobeCare™ A
C high-pressure laminate top/universal edge with MicrobeCare™ A

Prices for Steps 1-5.

			L	U	W	A	C
HZ505S.	**18**	**48**	$347	347	603	450	450
		60	$460	460	803	564	564
		72	$566	566	987	670	670

24	**36**	$347	347	603	436	436
	42	$406	406	706	496	496
	48	$462	462	810	565	565
	54	$542	542	947	646	646
	60	$626	626	1090	728	728
	66	$728	728	1268	831	831
	72	$839	839	1468	942	942
30	**36**	$392	392	683	482	482
	42	$452	452	792	541	541
	48	$519	519	909	622	622
	54	$600	600	1045	702	702
	60	$685	685	1199	789	789
	66	$791	791	1384	894	894
	72	$905	905	1582	1007	1007

Step 6. Power Access Cutout

For 18″ deep (18)

NC	no cutout	+$0

For 24″ deep (24) or 30″ deep (30) with 36″ wide (36)

NC	no cutout	+$0

For 24″ deep (24) or 30″ deep (30) with 42″ wide (42), 48″ wide (48), 54″ wide (54), or 60″ wide (60), or 66″ wide (66), or 72″ wide (72)

NC	no cutout	+$0
RC	right cutout for Logic Mini - Y1414 and Y1412.1	+$65
LC	left cutout for Logic Mini - Y1414 and Y1412.1	+$65
CC	center cutout for Logic Mini - Y1414 and Y1412.1	+$65

Step 7.

Top Finish

For high-pressure laminate top/thermoplastic edge (L), high-pressure laminate/universal edge (U), high-pressure laminate top/thermoplastic edge with MicrobeCare™ (A), or high-pressure laminate top/universal edge with MicrobeCare™ (C)

125	natural maple (CP) A	+$0
126	natural cherry (CP) A	+$0
127	walnut (CP) A	+$0
139	light ash (CP) A	+$0
140	warm ash (CP) A	+$0
76	light brown walnut	+$0
8Q	folkstone grey (CP)	+$0
91	white (CP)	+$0
98	studio white (CP)	+$0
CL	cool grey neutral	+$0
HF	inner tone light	+$0
HP	light anigre	+$0
LBA	clear on ash (CP)	+$0
LBB	oak on ash (CP)	+$0
LBC	walnut on ash (CP)	+$0
LBF	neutral twill	+$0
LBJ	graphite twill	+$0
LBQ	white twill	+$0
LBR	phantom ecru A	+$0
LBS	phantom cocoa A	+$0
LBU	medium matte walnut (CP) A	+$0
LBV	warm grey teak A	+$0
LT	light tone	+$0
LU	soft white	+$0
UBK	ultra black (CP) A	+$0
WL	warm stone (CP)	+$0
WN	warm grey neutral	+$0

Top/Edge Finish

For veneer top/veneer edge (W)

2U	light brown walnut A	+$85
40	dark brown walnut A	+$85
CHD	noble cherry	+$85
ET	clear on ash A	+$85
EU	oak on ash A	+$85
EV	walnut on ash A	+$85
EW	medium matte walnut A	+$85
OK	white oak (nonstandard) A	+$85
OU	walnut	+$85
UL	natural maple A	+$85
WHN	natural white oak	+$85

Step 8. Edge Finish

For high-pressure laminate top/thermoplastic edge (L) or high-pressure laminate top/thermoplastic edge with MicrobeCare™ (A)

125	natural maple (CP)	+$0
126	natural cherry (CP)	+$0
127	walnut (CP)	+$0
139	light ash (CP)	+$0
140	warm ash (CP)	+$0
76	light brown walnut	+$0
8Q	folkstone grey (CP)	+$0
91	white (CP)	+$0
98	studio white (CP)	+$0
CL	cool grey neutral	+$0
G1	graphite (CP)	+$0
HF	inner tone light	+$0
HP	light anigre	+$0
LBA	clear on ash (CP)	+$0
LBB	oak on ash (CP)	+$0
LBC	walnut on ash (CP)	+$0
LBF	neutral twill	+$0
LBJ	graphite twill	+$0
LBQ	white twill	+$0
LBR	phantom ecru	+$0
LBS	phantom cocoa	+$0
LBU	medium matte walnut (CP)	+$0
LBV	warm grey teak	+$0
LU	soft white	+$0
UBK	ultra black (CP)	+$0
WL	warm stone (CP)	+$0

For high-pressure laminate/universal edge (U) or high-pressure laminate top/universal edge with MicrobeCare™ (C)

PLY	plywood edge	+$50

OE1 Stiffener HZ510.

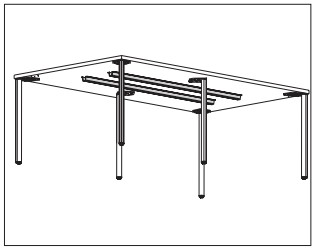

Product Information

Description

This stiffener adds additional stiffness to an OE1 Workspace Collection™ freestanding surface. Attachment hardware included.

Notes

Stiffener hangs below the surface and is 1¼″ high.

Stiffener is not used on surfaces less than 54″ wide.

Common stiffener applications include the following. See OE1 planning guide for more applications.

Stiffener Width—Leg Placement—Surface Width

39—2 legs outbound—54″

43—2 legs outbound—60″

48—2 legs outbound—66″

57—2 legs outbound—72″

Dimensions

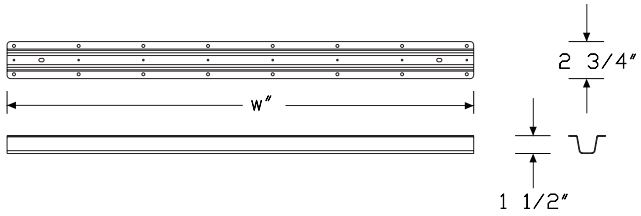

Specification Information

Step 1.

HZ510.

Step 2. Width

39	38⅝″ wide
43	43¼″ wide
48	48″ wide
57	57⅜″ wide
67	66¾″ wide
81	80⅞″ wide

Prices for Steps 1-2.

HZ510.	**39**	$94
	43	$94
	48	$94
	57	$94
	67	$94
	81	$94

OE1 Rectangular Table HZ515S

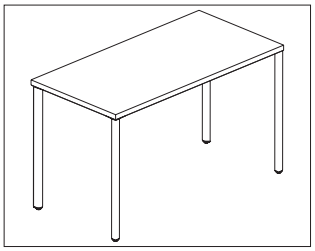

Product Information

Description

This rectangular table comes with 4 teardrop-shaped post legs. It has a laminate top with thermoplastic edge, laminate top with thermoplastic-backed plywood edge, or veneer top and edge. All casters are locking casters. Glides have 1½″ leveling range. Shipped knocked down.

Notes

Surface thickness is 1¼″.

Reinforcement channels are used under table tops 54″ wide and wider. Channel will be located along center line for 18″- and 24″-deep surfaces, and 19″ from front edge for 30″-deep surfaces. Reinforcement channel included.

Caster option has all locking casters.

Legs can be installed with angled edge out or with rounded edge out. Choice is made at time of installation.

Order Logic Mini power units (Y1414., Y1412.) separately.

MicrobeCare™ is an antimicrobial coating applied to the laminate or veneer surface of this product.

MicrobeCare™ protects products from mold, mildew, algae, and bacteria that cause deterioration, discoloration, odors, and stains.

MicrobeCare™ is registered with the US Environmental Protection Agency (EPA).

Dimensions

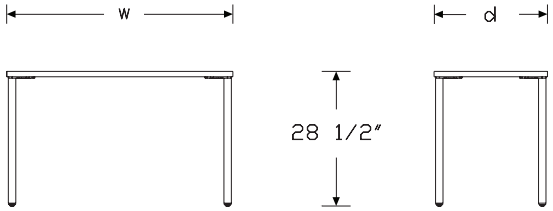

Specification Information

Step 1.

HZ515

Step 2. Edge

S. squared-edge

Step 3. Depth

18 18″ deep
24 24″ deep
30 30″ deep

Step 4. Width

For 18″ deep (18)

48 48″ wide
60 60″ wide
72 72″ wide

For 24″ deep (24) or 30″ deep (30)

36 36″ wide
42 42″ wide
48 48″ wide
54 54″ wide
60 60″ wide
66 66″ wide
72 72″ wide

Step 5. Surface Material

L high-pressure laminate top/thermoplastic edge
U high-pressure laminate/universal edge
W veneer top/veneer edge A
A high-pressure laminate top/thermoplastic edge with MicrobeCare™ A
C high-pressure laminate top/universal edge with MicrobeCare™ A

Prices for Steps 1-5.

		L	U	W	A	C
HZ515S. 18	**48**	$1132	1132	1375	1234	1234
	60	$1241	1241	1522	1342	1342
	72	$1340	1340	1653	1444	1444

24	**36**	$1132	1132	1375	1220	1220
	42	$1189	1189	1450	1278	1278
	48	$1242	1242	1526	1345	1345
	54	$1318	1318	1620	1421	1421
	60	$1396	1396	1723	1500	1500
	66	$1495	1495	1852	1598	1598
	72	$1602	1602	1985	1705	1705
30	**36**	$1175	1175	1436	1263	1263
	42	$1232	1232	1508	1320	1320
	48	$1296	1296	1591	1399	1399
	54	$1370	1370	1688	1475	1475
	60	$1454	1454	1796	1557	1557
	66	$1555	1555	1928	1658	1658
	72	$1663	1663	2073	1766	1766

Step 6. Power Access Cutout

For 18″ deep (18)

NC	no cutout	+$0

For 24″ deep (24) or 30″ deep (30) with 36″ wide (36)

NC	no cutout	+$0

For 24″ deep (24) or 30″ deep (30) with 42″ wide (42), 48″ wide (48), 54″ wide (54), or 60″ wide (60), or 66″ wide (66), or 72″ wide (72)

NC	no cutout	+$0
RC	right cutout for Logic Mini - Y1414 and Y1412.1	+$55
LC	left cutout for Logic Mini - Y1414 and Y1412.1	+$55
CC	center cutout for Logic Mini - Y1414 and Y1412.1	+$55

Step 7.

Top Finish

For high-pressure laminate top/thermoplastic edge (L), high-pressure laminate/universal edge (U), high-pressure laminate top/thermoplastic edge with MicrobeCare™ (A), or high-pressure laminate top/universal edge with MicrobeCare™ (C)

125	natural maple (CP) A	+$0
126	natural cherry (CP) A	+$0
127	walnut (CP) A	+$0
139	light ash (CP) A	+$0
140	warm ash (CP) A	+$0
76	light brown walnut	+$0
8Q	folkstone grey (CP)	+$0
91	white (CP)	+$0
98	studio white (CP)	+$0
CL	cool grey neutral	+$0
HF	inner tone light	+$0
HP	light anigre	+$0
LBA	clear on ash (CP)	+$0
LBB	oak on ash (CP)	+$0
LBC	walnut on ash (CP)	+$0
LBF	neutral twill	+$0
LBJ	graphite twill	+$0
LBQ	white twill	+$0
LBR	phantom ecru A	+$0
LBS	phantom cocoa A	+$0
LBU	medium matte walnut (CP) A	+$0
LBV	warm grey teak A	+$0
LT	light tone	+$0
LU	soft white	+$0
UBK	ultra black (CP) A	+$0
WL	warm stone (CP)	+$0
WN	warm grey neutral	+$0

Top/Edge Finish

For veneer top/veneer edge (W)

2U	light brown walnut A	+$85
40	dark brown walnut A	+$85
CHD	noble cherry A	+$85
ET	clear on ash A	+$85
EU	oak on ash A	+$85
EV	walnut on ash A	+$85
EW	medium matte walnut A	+$85
OK	white oak (nonstandard) A	+$85
OU	walnut A	+$85
UL	natural maple A	+$85
WHN	natural white oak A	+$85

Step 8. Edge Finish

For high-pressure laminate top/thermoplastic edge (L) or high-pressure laminate top/thermoplastic edge with MicrobeCare™ (A)

125	natural maple (CP)	+$0
126	natural cherry (CP)	+$0
127	walnut (CP)	+$0
139	light ash (CP)	+$0
140	warm ash (CP)	+$0
76	light brown walnut	+$0
8Q	folkstone grey (CP)	+$0
91	white (CP)	+$0
98	studio white (CP)	+$0
CL	cool grey neutral	+$0
G1	graphite (CP)	+$0
HF	inner tone light	+$0
HP	light anigre	+$0
LBA	clear on ash (CP)	+$0
LBB	oak on ash (CP)	+$0
LBC	walnut on ash (CP)	+$0
LBF	neutral twill	+$0
LBJ	graphite twill	+$0
LBQ	white twill	+$0
LBR	phantom ecru	+$0
LBS	phantom cocoa	+$0
LBU	medium matte walnut (CP)	+$0
LBV	warm grey teak	+$0
LU	soft white	+$0
UBK	ultra black (CP)	+$0
WL	warm stone (CP)	+$0

For high-pressure laminate/universal edge (U) or high-pressure laminate top/universal edge with MicrobeCare™ (C)

PLY	plywood edge	+$50

Step 9. Leg Finish

Metallic Paint

611	beige mist metallic (CP)	+$0
613	silver (CP)	+$0
SNA	satin aluminum	+$30
SNB	satin bronze	+$30
SNC	satin carbon	+$30

Sand Texture Paint

UBK	ultra black (CP)	+$0
8Q	folkstone grey (CP)	+$0
91	white (CP)	+$0
98	studio white (CP)	+$0
BK	black	+$0
G1	graphite (CP)	+$0
WL	warm stone (CP)	+$0
DB3	glacier	+$125
DN2	nightfall	+$125
DR1	canyon	+$125
OLF	olive	+$125

Step 10. Base Type

C	casters	+$0
G	glides	+$0

OE1 Accessory Bridge HZ520.

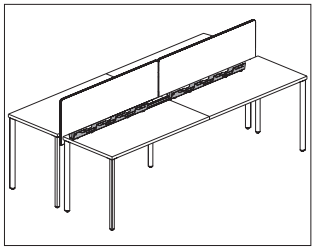

Product Information

Description

This Accessory Bridge attaches OE1 Workspace Collection™ tables together to create a back-to-back bench. It has an optional wire management tray.

Notes

Accessory Bridge does not work for 36″-wide tables.

Specify no power and wire management (N) option for just ganging brackets to connect tables together.

Flat edge and Pari screens can be mounted to the Accessory Bridge.

See the planning guide for more information.

Dimensions

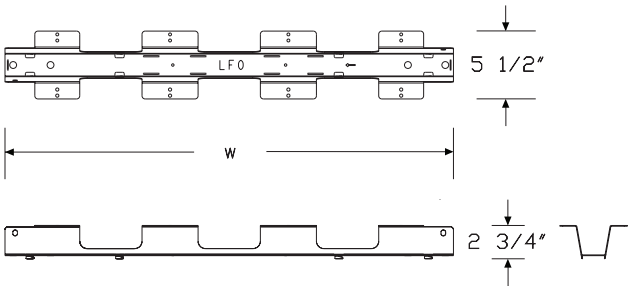

Specification Information

Step 1.

HZ520.

Step 2. Width

1	For surfaces 42″ wide or 48″ wide
2	For surfaces 54″ wide or 60″ wide
3	For surfaces 66″ wide or 72″ wide

Step 3. Power & Wire Management

N	no power and wire management
P	for use with power and wire management

Prices for Steps 1-3.

		N	P
HZ520.	**1**	$251	604
	2	$284	691
	3	$322	747

Step 4. Bracket Finish

BK	black	+$0
UBK	ultra black (CP)	+$0

OE1 End Caps for Accessory Bridge 2/Pkg HZ525.

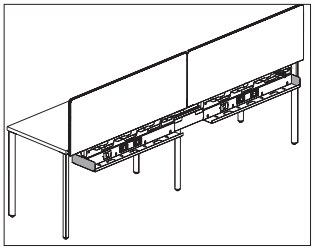

Product Information

Description

These end caps attach to the ends of the OE1 Workspace Collection™ Accessory Bridge. Package contains 2 end caps.

Dimensions

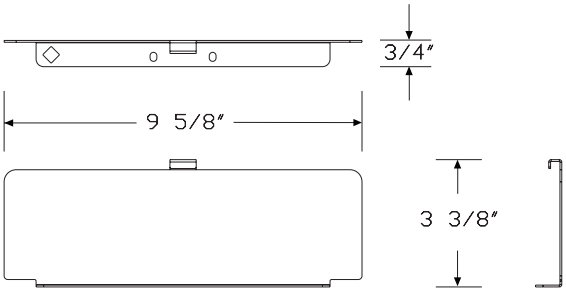

Specification Information

Step 1.

HZ525.	$173

Step 2. Bracket Finish

BK	black	+$0

OE1 Bridge Connector HZ530.

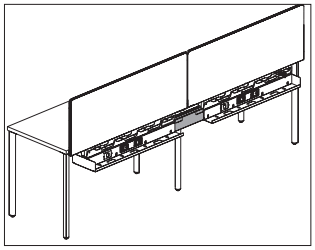

Product Information

Description

This connector is intended to bridge the gap between adjacent table Accessory Bridge with power and wire management. Product is UL listed.

Notes

When using power on connected tables, the OE1 Workspace Collection™ Bridge Connector is required and must be ordered.

Dimensions

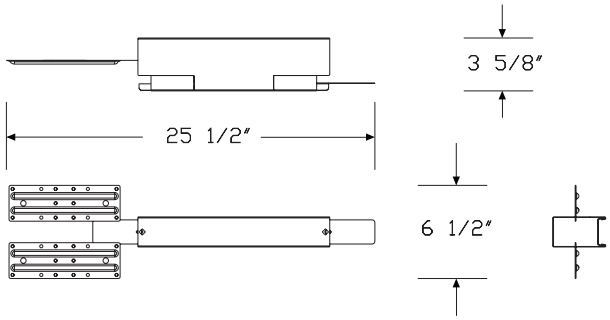

Specification Information

Step 1.

HZ530.	$177

Step 2. Finish

BK	black	+$0
UBK	ultra black (CP)	+$0

OE1 Worksurface, Project Table HZ550S

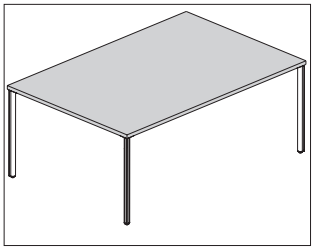

Product Information

Description

This surface attaches to OE1 Workspace Collection™ Teardrop Legs to create a project table. It has a laminate top with thermoplastic edge, laminate top with thermoplastic-backed plywood edge, or veneer top and edge. Laminate and veneer surfaces are 1¼″ thick.

Notes

MicrobeCare™ is an antimicrobial coating applied to the laminate or veneer surface of this product.

MicrobeCare protects products from mold, mildew, algae, and bacteria that cause deterioration, discoloration, odors, and stains.

MicrobeCare is registered with the US Environmental Protection Agency (EPA).

Project tables 84″ or 96″ wide require an intermediate leg on each side, for a total of 6 legs.

All project tables require 2 stiffeners (HZ510.), ordered separately.

Dimensions

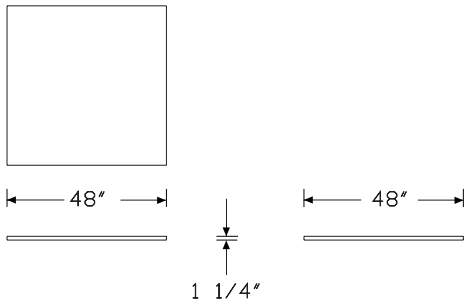

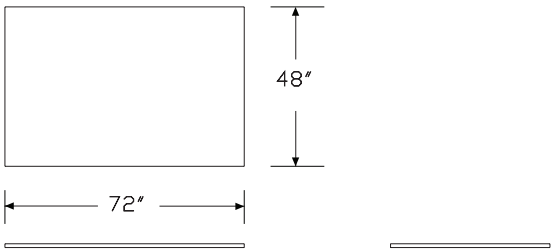

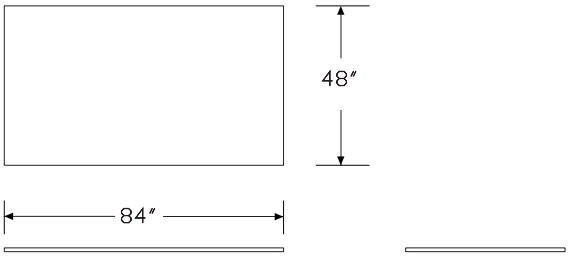

Specification Information

Step 1.

HZ550

Step 2. Edge

S.	squared-edge

Step 3. Depth

42	42″ deep
48	48″ deep

Step 4. Width

42	42″ wide
48	48″ wide
50	49.75″ wide
51	50.75″ wide
54	54″ wide
60	60″ wide
62	61.75″ wide
63	62.75″ wide
66	66″ wide
72	72″ wide
84	84″ wide
96	96″ wide

Step 5. Surface Material

L	high-pressure laminate top/thermoplastic edge
U	high-pressure laminate/universal edge
W	veneer top/veneer edge A
A	high-pressure laminate top/thermoplastic edge with MicrobeCare™ A
C	high-pressure laminate top/universal edge with MicrobeCare™ A

Prices for Steps 1-5.

			L	U	W	A	C
HZ550S.	**42**	**42**	$656	656	1146	747	747
		48	$802	802	1399	904	904
		50	$861	861	1500	962	962
		51	$916	916	1602	1019	1019
		54	$944	944	1651	1048	1048
		60	$1089	1089	1905	1192	1192
		62	$1146	1146	2005	1251	1251
		63	$1204	1204	2105	1307	1307
		66	$1233	1233	2156	1337	1337
		72	$1378	1378	2409	1480	1480
		84	$1522	1522	2661	1640	1640
		96	$1614	1614	2821	1729	1729
	48	**42**	$802	802	1399	904	904
		48	$967	967	1686	1069	1069
		50	$1029	1029	1796	1132	1132
		51	$1091	1091	1908	1194	1194
		54	$1125	1125	1962	1228	1228
		60	$1283	1283	2242	1387	1387
		62	$1346	1346	2352	1450	1450
		63	$1410	1410	2463	1513	1513
		66	$1441	1441	2518	1545	1545
		72	$1601	1601	2796	1703	1703
		84	$1758	1758	3073	1876	1876
		96	$1857	1857	3250	1974	1974

Step 6. Power Access Cutout

For 42″ wide (42), 48″ wide (48), 49.75″ wide (50), 50.75″ wide (51), 54″ wide (54), 60″ wide (60), 61.75″ wide (62), or 62.75″ wide (63)

NC	no cutout	+$0
C1	one center cutout for Logic Mini (RECTANGLE) - Y1414 and Y1412.1	+$65
C2	double center cutouts for logic mini (rectangle) - Y1414 AND Y1412.1	+$130
C3	one center cutout for Logic Mini (SQUARE) - Y1414 and Y1412.2	+$65
L3	one center cutout for logic Y1425 3 port	+$65
L5	one center cutout for logic Y1425 5 port	+$65
L6	one center cutout for logic Y1425 6 port	+$65
TB	one center cutout for technology bucket	+$190

For 66″ wide (66), 72″ wide (72), 84″ wide (84), or 96″ wide (96)

NC	no cutout	+$0
C4	two cutouts for logic mini (rectangle) - Y1414 and Y1412.1	+$130
C5	double center cutouts for logic mini (rectangle) - Y1414 AND Y1412.1	+$130
C6	two cutouts for logic mini (square) - Y1414 and Y1412.2	+$130
L3	two cutouts for logic Y1425 3 port	+$130
L5	two cutouts for logic Y1425 5 port	+$130
L6	two cutouts for logic Y1425 6 port	+$130
TB	one center cutout for technology bucket	+$130

Step 7.

Top Finish

For high-pressure laminate top/thermoplastic edge (L), high-pressure laminate/universal edge (U), high-pressure laminate top/thermoplastic edge with MicrobeCare™ (A), or high-pressure laminate top/universal edge with MicrobeCare™ (C)

125	natural maple (CP) A	+$0
126	natural cherry (CP) A	+$0
127	walnut (CP) A	+$0
139	light ash (CP) A	+$0
140	warm ash (CP) A	+$0
76	light brown walnut	+$0
8Q	folkstone grey (CP)	+$0
91	white (CP)	+$0
98	studio white (CP)	+$0
CL	cool grey neutral	+$0
HF	inner tone light	+$0
HP	light anigre	+$0
LBA	clear on ash (CP)	+$0
LBB	oak on ash (CP)	+$0
LBC	walnut on ash (CP)	+$0
LBF	neutral twill	+$0
LBJ	graphite twill	+$0
LBQ	white twill	+$0
LBR	phantom ecru A	+$0
LBS	phantom cocoa A	+$0
LBU	medium matte walnut (CP) A	+$0
LBV	warm grey teak A	+$0
LT	light tone	+$0
LU	soft white	+$0
UBK	ultra black (CP) A	+$0
WL	warm stone (CP)	+$0
WN	warm grey neutral	+$0

Top/Edge Finish

For veneer top/veneer edge (W)

2U	light brown walnut A	+$85
40	dark brown walnut A	+$85
CHD	noble cherry	+$85
ET	clear on ash A	+$85
EU	oak on ash A	+$85
EV	walnut on ash A	+$85
EW	medium matte walnut A	+$85
OK	white oak (nonstandard) A	+$85
UL	natural maple A	+$85
WHN	natural white oak	+$85

Step 8. Edge Finish

For high-pressure laminate top/thermoplastic edge (L) or high-pressure laminate top/thermoplastic edge with MicrobeCare™ (A)

125	natural maple (CP)	+$0
126	natural cherry (CP)	+$0
127	walnut (CP)	+$0
139	light ash (CP)	+$0
140	warm ash (CP)	+$0
76	light brown walnut	+$0
8Q	folkstone grey (CP)	+$0
91	white (CP)	+$0
98	studio white (CP)	+$0
CL	cool grey neutral	+$0
G1	graphite (CP)	+$0
HF	inner tone light	+$0
HP	light anigre	+$0
LBA	clear on ash (CP)	+$0
LBB	oak on ash (CP)	+$0
LBC	walnut on ash (CP)	+$0
LBF	neutral twill	+$0
LBJ	graphite twill	+$0
LBQ	white twill	+$0
LBR	phantom ecru	+$0
LBS	phantom cocoa	+$0
LBU	medium matte walnut (CP)	+$0
LBV	warm grey teak	+$0
LU	soft white	+$0
UBK	ultra black (CP)	+$0
WL	warm stone (CP)	+$0

For high-pressure laminate/universal edge (U) or high-pressure laminate top/universal edge with MicrobeCare™ (C)

PLY	plywood edge	+$50

OE1 Project Table HZ555S

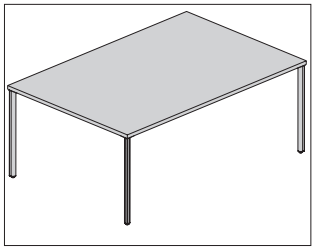

Product Information

Description

This OE1 Workspace Collection™ seated-height Project Table has a laminate top with thermoplastic edge, laminate top with thermoplastic-backed plywood edge, or veneer top and edge. Laminate and veneer surfaces are 1¼″ thick. Available with cutouts to accommodate Herman Miller power options that are ordered separately. Table comes with 1½″ leveling glides. Shipped knocked down.

Notes

All project tables come with 2 stiffeners (HZ510.).

Project tables that are 84″ or 96″ wide come with an intermediate leg on each side, for a total of 6 legs.

All casters are locking.

Dimensions

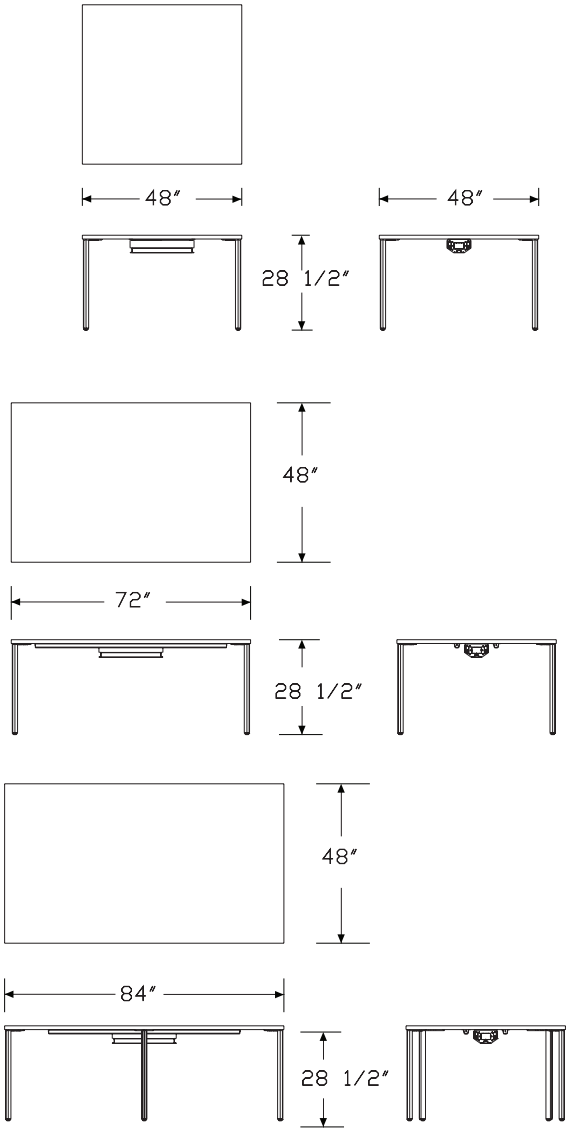

Specification Information

Step 1.

HZ555

Step 2. Edge

S.	squared-edge

Step 3. Depth

42	42″ deep
48	48″ deep

Step 4. Width

42	42″ wide
48	48″ wide
50	49.75″ wide
51	50.75″ wide
54	54″ wide
60	60″ wide
62	61.75″ wide
63	62.75″ wide
66	66″ wide
72	72″ wide
84	84″ wide
96	96″ wide

Step 5. Surface Material

L	high-pressure laminate top/thermoplastic edge
U	high-pressure laminate/universal edge
W	veneer top/veneer edge [A]
A	high-pressure laminate top/thermoplastic edge with MicrobeCare™ [A]
C	high-pressure laminate top/universal edge with MicrobeCare™ [A]

Prices for Steps 1-5.

			L	U	W	A	C
HZ555S.	**42**	**42**	$1426	1426	2488	1517	1517
		48	$1564	1564	2741	1667	1667
		50	$1619	1619	2839	1722	1722
		51	$1674	1674	2928	1778	1778
		54	$1702	1702	2997	1806	1806
		60	$1839	1839	3223	1942	1942
		62	$1893	1893	3292	1996	1996
		63	$1947	1947	3401	2050	2050
		66	$1975	1975	3471	2079	2079
		72	$2113	2113	3690	2217	2217
		84	$2386	2386	4176	2506	2506
		96	$2738	2738	4726	2854	2854
	48	**42**	$1564	1564	2741	1667	1667
		48	$1721	1721	3009	1824	1824
		50	$1781	1781	3114	1884	1884
		51	$1841	1841	3223	1944	1944
		54	$1872	1872	3292	1974	1974
		60	$2023	2023	3539	2125	2125
		62	$2084	2084	3635	2187	2187
		63	$2144	2144	3757	2247	2247
		66	$2174	2174	3828	2276	2276
		72	$2325	2325	4074	2428	2428
		84	$2599	2599	4540	2715	2715
		96	$2874	2874	5027	2990	2990

Step 6. Power Access Cutout

For 42″ wide (42), 48″ wide (48), 49.75″ wide (50), 50.75″ wide (51), 54″ wide (54), 60″ wide (60), 61.75″ wide (62), or 62.75″ wide (63)

NC	no cutout	+$0
C1	one center cutout for Logic Mini (RECTANGLE) - Y1414 and Y1412.1	+$65
C2	double center cutouts for logic mini (rectangle) - Y1414 AND Y1412.1	+$130
C3	one center cutout for Logic Mini (SQUARE) - Y1414 and Y1412.2	+$65
L3	one center cutout for logic Y1425 3 port	+$65
L5	one center cutout for logic Y1425 5 port	+$65
L6	one center cutout for logic Y1425 6 port	+$65
TB	one center cutout for technology bucket	+$190

For 66″ wide (66), 72″ wide (72), 84″ wide (84), or 96″ wide (96)

NC	no cutout	+$0
C4	two cutouts for logic mini (rectangle) - Y1414 and Y1412.1	+$130
C5	double center cutouts for logic mini (rectangle) - Y1414 AND Y1412.1	+$130
C6	two cutouts for logic mini (square) - Y1414 and Y1412.2	+$130
L3	two cutouts for logic Y1425 3 port	+$130
L5	two cutouts for logic Y1425 5 port	+$130
L6	two cutouts for logic Y1425 6 port	+$130
TB	one center cutout for technology bucket	+$130

Step 7.

Top Finish

For high-pressure laminate top/thermoplastic edge (L), high-pressure laminate/universal edge (U), high-pressure laminate top/thermoplastic edge with MicrobeCare™ (A), or high-pressure laminate top/universal edge with MicrobeCare™ (C)

125	natural maple (CP) A	+$0
126	natural cherry (CP) A	+$0
127	walnut (CP) A	+$0
139	light ash (CP) A	+$0
140	warm ash (CP) A	+$0
76	light brown walnut	+$0
8Q	folkstone grey (CP)	+$0
91	white (CP)	+$0
98	studio white (CP)	+$0
CL	cool grey neutral	+$0
HF	inner tone light	+$0
HP	light anigre	+$0
LBA	clear on ash (CP)	+$0
LBB	oak on ash (CP)	+$0
LBC	walnut on ash (CP)	+$0
LBF	neutral twill	+$0
LBJ	graphite twill	+$0
LBQ	white twill	+$0
LBR	phantom ecru A	+$0
LBS	phantom cocoa A	+$0
LBU	medium matte walnut (CP) A	+$0
LBV	warm grey teak A	+$0
LT	light tone	+$0
LU	soft white	+$0
UBK	ultra black (CP) A	+$0
WL	warm stone (CP)	+$0
WN	warm grey neutral	+$0

Top/Edge Finish

For veneer top/veneer edge (W)

2U	light brown walnut A	+$85
40	dark brown walnut A	+$85
CHD	noble cherry	+$85
ET	clear on ash A	+$85
EU	oak on ash A	+$85
EV	walnut on ash A	+$85
EW	medium matte walnut A	+$85
OK	white oak (nonstandard) A	+$85
UL	natural maple A	+$85
WHN	natural white oak	+$85

Step 8. Edge Finish

For high-pressure laminate top/thermoplastic edge (L) or high-pressure laminate top/thermoplastic edge with MicrobeCare™ (A)

125	natural maple (CP)	+$0
126	natural cherry (CP)	+$0
127	walnut (CP)	+$0
139	light ash (CP)	+$0
140	warm ash (CP)	+$0
76	light brown walnut	+$0
8Q	folkstone grey (CP)	+$0
91	white (CP)	+$0
98	studio white (CP)	+$0
CL	cool grey neutral	+$0
G1	graphite (CP)	+$0
HF	inner tone light	+$0
HP	light anigre	+$0
LBA	clear on ash (CP)	+$0
LBB	oak on ash (CP)	+$0
LBC	walnut on ash (CP)	+$0
LBF	neutral twill	+$0
LBJ	graphite twill	+$0
LBQ	white twill	+$0
LBR	phantom ecru	+$0
LBS	phantom cocoa	+$0
LBU	medium matte walnut (CP)	+$0
LBV	warm grey teak	+$0
LU	soft white	+$0
UBK	ultra black (CP)	+$0
WL	warm stone (CP)	+$0

For high-pressure laminate/universal edge (U) or high-pressure laminate top/universal edge with MicrobeCare™ (C)

PLY	plywood edge	+$50

Step 9. Leg Finish

Metallic Paint

611	beige mist metallic (CP)	+$0
613	silver (CP)	+$0
SNA	satin aluminum	+$135
SNB	satin bronze	+$135
SNC	satin carbon	+$135

Sand Texture Paint		
UBK	ultra black (CP)	+$0
8Q	folkstone grey (CP)	+$0
91	white (CP)	+$0
98	studio white (CP)	+$0
BK	black	+$0
G1	graphite (CP)	+$0
WL	warm stone (CP)	+$0
DB3	glacier	+$125
DN2	nightfall	+$125
DR1	canyon	+$125
OLF	olive	+$125

Step 10. Base Type		
C	casters	+$0
G	glides	+$0

OE1 Leg Cable Manager for Seated Height Tables

HZ560.

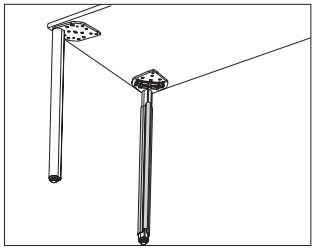

Product Information

Description

This cable manager routes cables from the underside of an OE1 Workspace Collection™ seated height table down to the floor. The kit includes the cable manager and a cord bracket that attaches to the leg plate.

Notes

Cable manager can hold 2 cords.

Dimensions

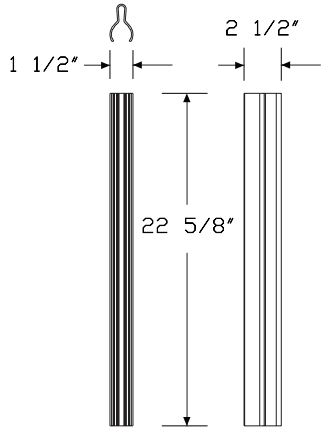

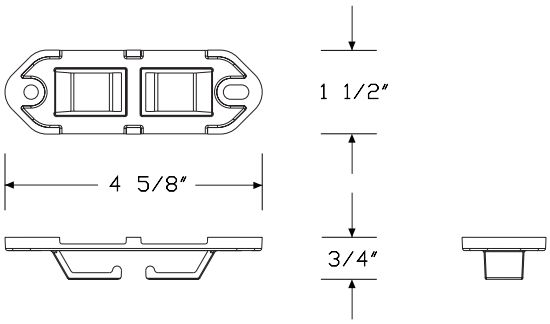

Specification Information

Step 1.

HZ560.

Step 2. Cable Manager Height

23	23″ high for seated height tables

Prices for Steps 1-2.

HZ560. 23		$125

Step 3. Finish

8Q	folkstone grey (CP)	+$0
BK	black	+$0
DB3	glacier	+$20
DN2	nightfall	+$20
DR1	canyon	+$20
OLF	olive	+$20
UBK	ultra black (CP)	+$0

OE1 Ganging Connector HZ565.

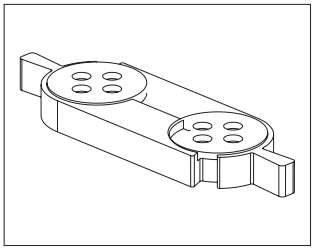

Product Information

Description

This kit has 2 clips that attach to the underside of 2 adjacent surfaces, ganging them together to provide stability and allow components to be routed from 1 surface to another. Finish is black. Package contains 1 full connector assembly.

Notes

When ganging along the width of 2 surfaces, 2 connector assemblies are required. When ganging along the depth of 2 surfaces, 1 connector assembly is required. See OE1 planning guide for more information.

Dimensions

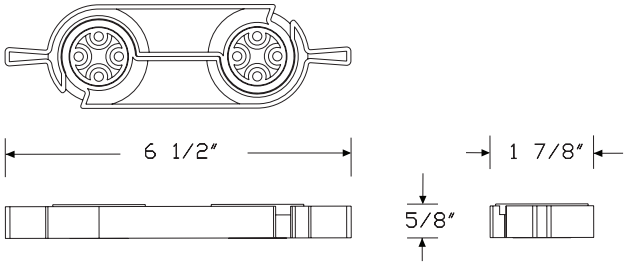

Specification Information

Step 1.

HZ565.	$87

OE1 Bridge Mounted Screen, Flat Edge HZ535.

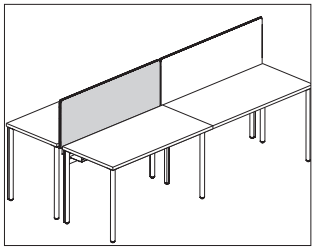

Product Information

Description

This flat edge screen provides privacy on the Accessory Bridge in a bench configuration with OE1 Workspace Collection™ tables. Installed height of the screen is 42″, 46″, or 53″ high. Attachment hardware included.

Notes

Screen only attaches to the OE1 Accessory Bridge (HZ520.).

Screen accepts Customer's Own Material (COM). Yardage is estimated for nondirectional, 54″ wide fabrics.

For vertical fabric direction (T, E) for 42″ and 48″ wide only:

Height—Yardage

14—1.26

18—1.51

25—1.95

For horizontal fabric direction (R, D) for 14″ and 18″ height:

Width—Yardage

42—1.51

48—1.70

54—1.89

60—2.08

66—2.27

72—2.46

For 25″ height:

42—3.02

48—3.40

54—3.78

60—3.85

66—4.54

72—4.91

Dimensions

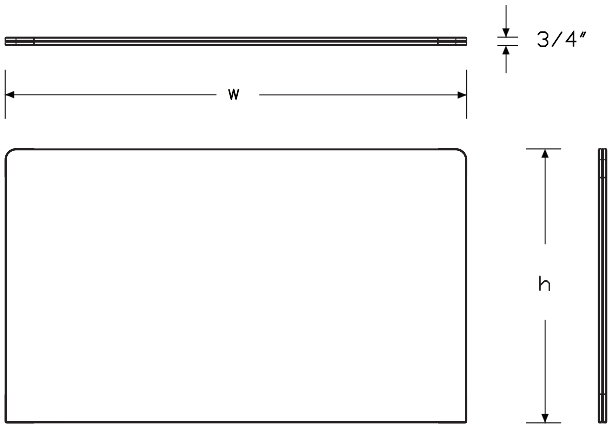

Specification Information

Step 1.

HZ535.

Step 2. Height

14	14″ high (to reach 42″ datum)
18	18″ high (to reach 46″ datum)
25	25″ high (to reach 53″ datum)

Step 3. Width

42	42″ wide
48	48″ wide
54	54″ wide
60	60″ wide
66	66″ wide
72	72″ wide

Step 4. Surface Material

For 42″ wide (42) or 48″ wide (48)

D	tackable fabric, horizontal with MicrobeCare™
E	tackable fabric with MicrobeCare™
R	tackable fabric, horizontal
T	tackable fabric

For 54″ wide (54), 60″ wide (60), 66″ wide (66), or 72″ wide (72)

D	tackable fabric, horizontal with MicrobeCare™
R	tackable fabric, horizontal

Prices for Steps 1-4.

			D	E	R	T
HZ535.	**14**	**42**	$912	912	826	826
		48	$967	967	880	880
		54	$1023	—	936	—
		60	$1089	—	1003	—
		66	$1157	—	1073	—
		72	$1228	—	1141	—
	18	**42**	$1011	1011	926	926
		48	$1073	1073	987	987
		54	$1135	—	1051	—
		60	$1208	—	1126	—
		66	$1288	—	1202	—
		72	$1364	—	1280	—
	25	**42**	$1150	1150	1065	1065
		48	$1220	1220	1136	1136
		54	$1291	—	1205	—
		60	$1378	—	1293	—
		66	$1467	—	1383	—
		72	$1555	—	1469	—

Step 5. Fabric

For 14″ high (to reach 42″ datum) (14) or 18″ high (to reach 46″ datum) (18) with 42″ wide (42), or 48″ wide (48)

Price Category B	+$176
Price Category 1	+$0
Price Category 2	+$23
Price Category 3	+$55
Price Category 4	+$98
Price Category 5	+$168
Price Category C	+$239
Price Category E	+$361

For 25″ high (to reach 53″ datum) (25) with 42″ wide (42), or 48″ wide (48)

Price Category B	+$311
Price Category 1	+$0
Price Category 2	+$41
Price Category 3	+$97
Price Category 4	+$174
Price Category 5	+$295
Price Category C	+$420
Price Category E	+$636

For 14″ high (to reach 42″ datum) (14) or 18″ high (to reach 46″ datum) (18) with 54″ wide (54), or 60″ wide (60)

Price Category B	+$217
Price Category 1	+$0
Price Category 2	+$29
Price Category 3	+$68
Price Category 4	+$121
Price Category 5	+$208
Price Category C	+$294
Price Category E	+$445

OE1 Bridge Mounted Screen, Flat Edge *continued*

For 14″ high (to reach 42″ datum) (14) or 18″ high (to reach 46″ datum) (18) with 66″ wide (66), or 72″ wide (72)	
Price Category B	+$259
Price Category 1	+$0
Price Category 2	+$34
Price Category 3	+$82
Price Category 4	+$145
Price Category 5	+$247
Price Category C	+$350
Price Category E	+$530

For 25″ high (to reach 53″ datum) (25) with 54″ wide (54), or 60″ wide (60)	
Price Category B	+$384
Price Category 1	+$0
Price Category 2	+$50
Price Category 3	+$121
Price Category 4	+$215
Price Category 5	+$365
Price Category C	+$520
Price Category E	+$785

For 25″ high (to reach 53″ datum) (25) with 66″ wide (66), or 72″ wide (72)	
Price Category B	+$456
Price Category 1	+$0
Price Category 2	+$59
Price Category 3	+$144
Price Category 4	+$256
Price Category 5	+$434
Price Category C	+$618
Price Category E	+$934

OE1 Bridge Mounted Screen, Pari HZ540.

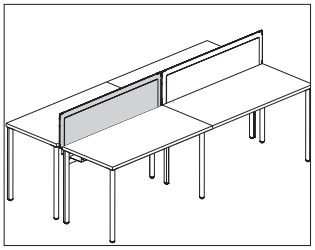

Product Information

Description

This Pari screen provides privacy on the Accessory Bridge in a bench configuration with OE1 tables. Installed height of the screen is 42″, 46″, or 53″ high. Attachment hardware included.

Notes

Screen only attaches to the OE1 Accessory Bridge (HZ520.).

Screen accepts Customer's Own Material (COM). Yardage is estimated for nondirectional, 54″ wide fabrics.

For vertical fabric direction (T, E) for 42″ and 48″ wide only:

Height—Yardage

14—1.26

18—1.51

25—1.95

For horizontal fabric direction (R, D) for 14″ and 18″ height:

Width—Yardage

42—1.51

48—1.70

54—1.89

60—2.08

66—2.27

72—2.46

For 25″ height:

42—3.02

48—3.40

54—3.78

60—3.85

66—4.54

72—4.91

Dimensions

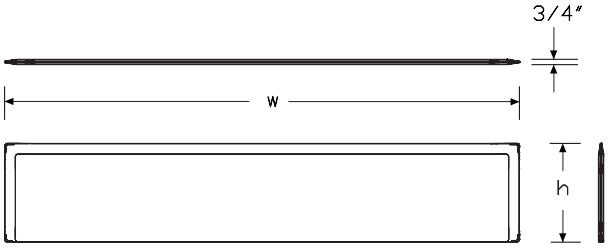

Specification Information

Step 1.

HZ540.

Step 2. Height

14	14″ high (to reach 42″ datum)
18	18″ high (to reach 46″ datum)
25	25″ high (to reach 53″ datum)

Step 3. Width

42	42″ wide
48	48″ wide
54	54″ wide
60	60″ wide
66	66″ wide
72	72″ wide

Step 4. Surface Material

For 42″ wide (42) or 48″ wide (48)

D	tackable fabric, horizontal with MicrobeCare™
E	tackable fabric with MicrobeCare™
R	tackable fabric, horizontal
T	tackable fabric

For 54″ wide (54), 60″ wide (60), 66″ wide (66), or 72″ wide (72)

D	tackable fabric, horizontal with MicrobeCare™
R	tackable fabric, horizontal

Prices for Steps 1-4.

			D	E	R	T
HZ540.	**14**	**42**	$1139	1139	1054	1054
		48	$1234	1234	1150	1150
		54	$1332	—	1246	—
		60	$1414	—	1329	—
		66	$1496	—	1412	—
		72	$1578	—	1494	—
	18	**42**	$1264	1264	1179	1179
		48	$1371	1371	1289	1289
		54	$1480	—	1395	—
		60	$1573	—	1489	—
		66	$1664	—	1580	—
		72	$1758	—	1673	—

25	**42**	$1384	1384	1298	1298
	48	$1501	1501	1416	1416
	54	$1619	—	1532	—
	60	$1721	—	1634	—
	66	$1823	—	1738	—
	72	$1923	—	1839	—

Step 5. Fabric

For 14″ high (to reach 42″ datum) (14) or 18″ high (to reach 46″ datum) (18) with 42″ wide (42), or 48″ wide (48)

Price Category B	+$176
Price Category 1	+$0
Price Category 2	+$23
Price Category 3	+$55
Price Category 4	+$98
Price Category 5	+$168
Price Category C	+$239
Price Category E	+$361

For 25″ high (to reach 53″ datum) (25) with 42″ wide (42), or 48″ wide (48)

Price Category B	+$311
Price Category 1	+$0
Price Category 2	+$41
Price Category 3	+$97
Price Category 4	+$174
Price Category 5	+$295
Price Category C	+$420
Price Category E	+$636

For 14″ high (to reach 42″ datum) (14) or 18″ high (to reach 46″ datum) (18) with 54″ wide (54), or 60″ wide (60)

Price Category B	+$217
Price Category 1	+$0
Price Category 2	+$29
Price Category 3	+$68
Price Category 4	+$121
Price Category 5	+$208
Price Category C	+$294
Price Category E	+$445

For 14″ high (to reach 42″ datum) (14) or 18″ high (to reach 46″ datum) (18) with 66″ wide (66), or 72″ wide (72)

Price Category B	+$259
Price Category 1	+$0
Price Category 2	+$34
Price Category 3	+$82
Price Category 4	+$145
Price Category 5	+$247
Price Category C	+$350
Price Category E	+$530

For 25″ high (to reach 53″ datum) (25) with 54″ wide (54), or 60″ wide (60)

Price Category B	+$384
Price Category 1	+$0
Price Category 2	+$50
Price Category 3	+$121
Price Category 4	+$215
Price Category 5	+$365
Price Category C	+$520
Price Category E	+$785

For 25″ high (to reach 53″ datum) (25) with 66″ wide (66), or 72″ wide (72)

Price Category B	+$456
Price Category 1	+$0
Price Category 2	+$59
Price Category 3	+$144
Price Category 4	+$256
Price Category 5	+$434
Price Category C	+$618
Price Category E	+$934

OE1 Bridge Mounted Screen, Laminate HZ545.

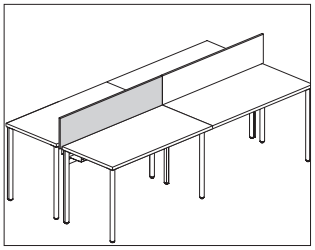

Product Information

Description

This laminate screen provides privacy on the Accessory Bridge in a bench configuration with OE1 Workspace Collection™ tables. Installed height of the screen is 42″, 46″, or 53″ high. Attachment hardware included.

Notes

Screen only attaches to the OE1 Accessory Bridge (HZ520.).

Dimensions

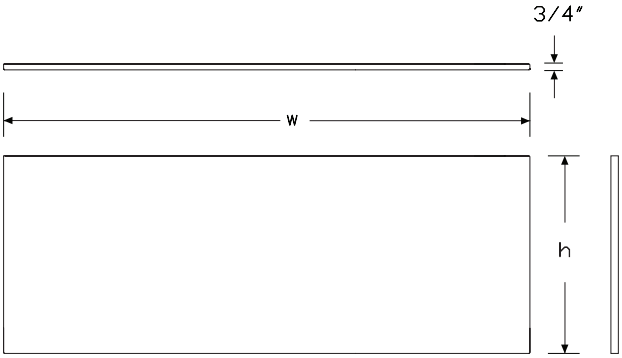

Specification Information

Step 1.

HZ545.

Step 2. Height

14	14″ high (to reach 42″ datum)
18	18″ high (to reach 46″ datum)
25	25″ high (to reach 53″ datum)

Step 3. Width

42	42″ wide
48	48″ wide
54	54″ wide
60	60″ wide
66	66″ wide
72	72″ wide

Step 4. Surface Material

L	high-pressure laminate top/thermoplastic edge

Prices for Steps 1-4.

			L
HZ545.	**14**	**42**	$531
		48	$575
		54	$617
		60	$672
		66	$709
		72	$747
	18	**42**	$638
		48	$690
		54	$739
		60	$808
		66	$850
		72	$893
	25	**42**	$764
		48	$826
		54	$888
		60	$969
		66	$1021
		72	$1071

Step 5. Grain Direction

HRG	horizontal grain	+$0

OE1 Bridge Mounted Screen, Laminate *continued*

Step 6. Surface Finish		
125	natural maple (CP)	+$0
126	natural cherry (CP)	+$0
127	walnut (CP)	+$0
139	light ash (CP)	+$0
140	warm ash (CP)	+$0
76	light brown walnut	+$0
8Q	folkstone grey (CP)	+$0
91	white (CP)	+$0
98	studio white (CP)	+$0
CL	cool grey neutral	+$0
G1	graphite (CP)	+$0
HP	light anigre	+$0
LBA	clear on ash (CP)	+$0
LBB	oak on ash (CP)	+$0
LBC	walnut on ash (CP)	+$0
LBF	neutral twill	+$0
LBJ	graphite twill	+$0
LBQ	white twill	+$0
LBR	phantom ecru	+$0
LBS	phantom cocoa	+$0
LBU	medium matte walnut (CP)	+$0
LBV	warm grey teak	+$0
LU	soft white	+$0
WL	warm stone (CP)	+$0
WN	warm grey neutral	+$0

Step 7. Edge Finish		
125	natural maple (CP)	+$0
126	natural cherry (CP)	+$0
127	walnut (CP)	+$0
139	light ash (CP)	+$0
140	warm ash (CP)	+$0
76	light brown walnut	+$0
8Q	folkstone grey (CP)	+$0
91	white (CP)	+$0
98	studio white (CP)	+$0
CL	cool grey neutral	+$0
G1	graphite (CP)	+$0
HF	inner tone light	+$0
HP	light anigre	+$0
LBA	clear on ash (CP)	+$0
LBB	oak on ash (CP)	+$0
LBC	walnut on ash (CP)	+$0
LBF	neutral twill	+$0
LBJ	graphite twill	+$0
LBQ	white twill	+$0
LBR	phantom ecru	+$0
LBS	phantom cocoa	+$0
LBU	medium matte walnut (CP)	+$0
LBV	warm grey teak	+$0
LU	soft white	+$0
UBK	ultra black (CP)	+$0
WL	warm stone (CP)	+$0
WN	warm grey neutral	+$0

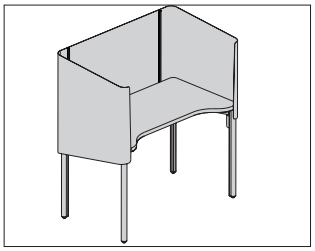

Product Information

Description

This OE1 Workspace Collection™ Nook provides privacy and boundary for focused work. It has a 26″D×45″W laminate top with thermoplastic edge, laminate top with thermoplastic-backed plywood edge, or veneer top and edge. Laminate and veneer surfaces are 1¼″ thick. The screen extends 21½″ above the surface and has optional liners.

Notes

There is a 1″ gap between surface and screen.

Liners (HZ575.) are optional, and can also be ordered separately.

All Liner sections come in the same specified fabric.

Dimensions

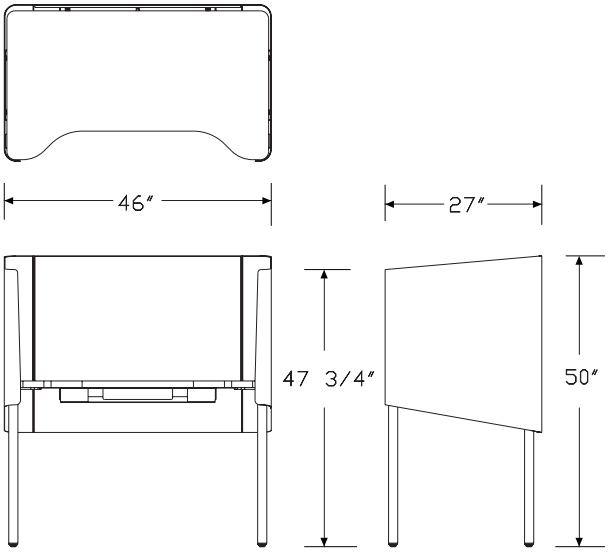

Specification Information

Step 1.

HZ570

Step 2. Edge

S. squared-edge

Step 3. Surface Depth

26 26″ deep

Step 4. Surface Width

45 45″ wide

Step 5. Surface Material

L high-pressure laminate top/thermoplastic edge

W veneer top/veneer edge A

A high-pressure laminate top/thermoplastic edge with MicrobeCare™ A

Step 6. Liner Options

C center liner, no side liners

L center liner and two side liners

N no center liner, no side liners

Prices for Steps 1-6.

	LC	LL	LN	WC	WL	WN
HZ570S. 26 45	$3565	4231	3241	4623	5289	4299

	AC	AL	AN
HZ570S. 26 45	$3653	4322	3330

Step 7. Power Access Cutout

NC	no cutout	+$0
CC	center cutout for Logic Mini - Y1414 and Y1412.1	+$65

Step 8. Screen Finish

Metallic Paint

611	beige mist metallic (CP)	+$0
613	silver (CP)	+$0
SNA	satin aluminum	+$60
SNB	satin bronze	+$60
SNC	satin carbon	+$60

Sand Texture Paint		
8Q	folkstone grey (CP)	+$0
91	white (CP)	+$0
98	studio white (CP)	+$0
BK	black	+$0
DB3	glacier	+$50
DN2	nightfall	+$50
DR1	canyon	+$50
G1	graphite (CP)	+$0
OLF	olive	+$50
UBK	ultra black (CP)	+$0
WL	warm stone (CP)	+$0

Step 9. Liner Fabric

For center liner, no side liners (C) or center liner and two side liners (L)

Price Category 4 +$0

Step 10.

Top Finish

For high-pressure laminate top/thermoplastic edge (L) or high-pressure laminate top/thermoplastic edge with MicrobeCare™ (A)

125	natural maple (CP) A	+$0
126	natural cherry (CP) A	+$0
127	walnut (CP) A	+$0
139	light ash (CP) A	+$0
140	warm ash (CP) A	+$0
76	light brown walnut	+$0
8Q	folkstone grey (CP)	+$0
91	white (CP)	+$0
98	studio white (CP)	+$0
CL	cool grey neutral	+$0
HF	inner tone light	+$0
HP	light anigre	+$0
LBA	clear on ash (CP)	+$0
LBB	oak on ash (CP)	+$0
LBC	walnut on ash (CP)	+$0
LBF	neutral twill	+$0
LBJ	graphite twill	+$0
LBQ	white twill	+$0
LBR	phantom ecru A	+$0
LBS	phantom cocoa A	+$0
LBU	medium matte walnut (CP) A	+$0
LBV	warm grey teak A	+$0
LT	light tone	+$0
LU	soft white	+$0
UBK	ultra black (CP) A	+$0
WL	warm stone (CP)	+$0
WN	warm grey neutral	+$0

Top/Edge Finish

For veneer top/veneer edge (W)

2U	light brown walnut A	+$85
40	dark brown walnut A	+$85
CHD	noble cherry	+$85
ET	clear on ash A	+$85
EU	oak on ash A	+$85
EV	walnut on ash A	+$85
EW	medium matte walnut A	+$85
OK	white oak (nonstandard) A	+$85
UL	natural maple A	+$85
WHN	natural white oak	+$85

Step 11. Edge Finish		
For high-pressure laminate top/thermoplastic edge (L) or high-pressure laminate top/thermoplastic edge with MicrobeCare™ (A)		
125	natural maple (CP)	+$0
126	natural cherry (CP)	+$0
127	walnut (CP)	+$0
139	light ash (CP)	+$0
140	warm ash (CP)	+$0
76	light brown walnut	+$0
8Q	folkstone grey (CP)	+$0
91	white (CP)	+$0
98	studio white (CP)	+$0
CL	cool grey neutral	+$0
G1	graphite (CP)	+$0
HF	inner tone light	+$0
HP	light anigre	+$0
LBA	clear on ash (CP)	+$0
LBB	oak on ash (CP)	+$0
LBC	walnut on ash (CP)	+$0
LBF	neutral twill	+$0
LBJ	graphite twill	+$0
LBQ	white twill	+$0
LBR	phantom ecru	+$0
LBS	phantom cocoa	+$0
LBU	medium matte walnut (CP)	+$0
LBV	warm grey teak	+$0
LU	soft white	+$0
UBK	ultra black (CP)	+$0
WL	warm stone (CP)	+$0

Step 12. Leg Finish		
Metallic Paint		
611	beige mist metallic (CP)	+$0
613	silver (CP)	+$0
SNA	satin aluminum	+$135
SNB	satin bronze	+$135
SNC	satin carbon	+$135
Sand Texture Paint		
UBK	ultra black (CP)	+$0
8Q	folkstone grey (CP)	+$0
91	white (CP)	+$0
98	studio white (CP)	+$0
BK	black	+$0
G1	graphite (CP)	+$0
WL	warm stone (CP)	+$0
DB3	glacier	+$125
DN2	nightfall	+$125
DR1	canyon	+$125
OLF	olive	+$125

Step 13. Base Type		
C	casters	+$0
G	glides	+$0

OE1 Nook Liner HZ575.

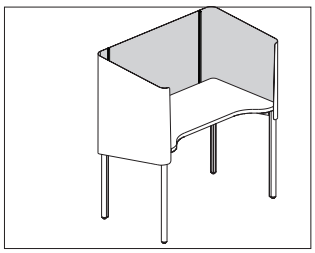

Product Information

Description

This liner retrofits to the OE1 Workspace Collection™ Nook. It is user movable without tools.

Notes

Liner is compatible with the OE1 Nook (HZ570).

Dimensions

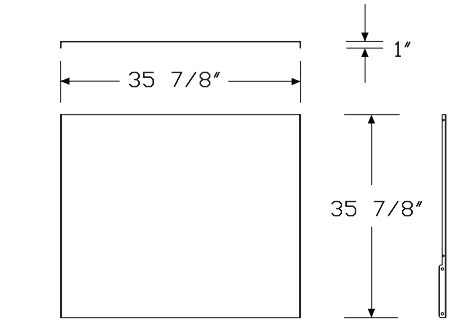

Centre Liner

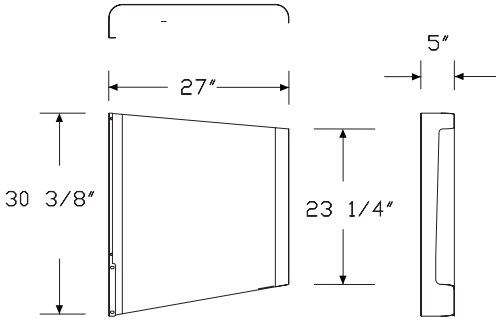

Right Liner

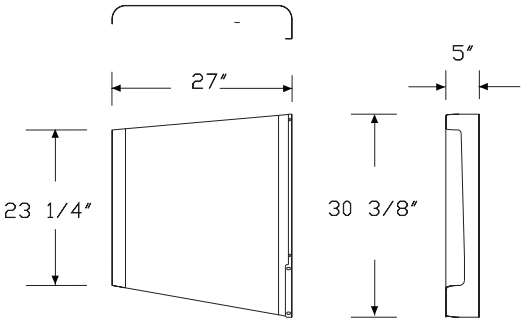

Left Liner

Specification Information	
Step 1.	
HZ575.	

Step 2. Liner Options	
C	center liner, no side liners
L	center liner and two side liners
S	two side liners, no center liner

Prices for Steps 1-2.		
HZ575.	**C**	$413
	L	$1101
	S	$688

Step 3. Finish	
Price Category 4	+$0

OE1 Huddle Table HZ580S

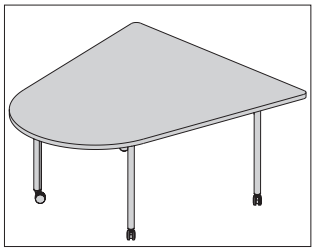

Product Information

Description

This OE1 Workspace Collection™ seated-height Huddle Table has a laminate top with thermoplastic edge, or veneer top and edge. Laminate and veneer surfaces are 1¼″ thick. Available with cutouts to accommodate Herman Miller power options that are ordered separately. Table comes with 1½″ leveling glides or casters.

Dimensions

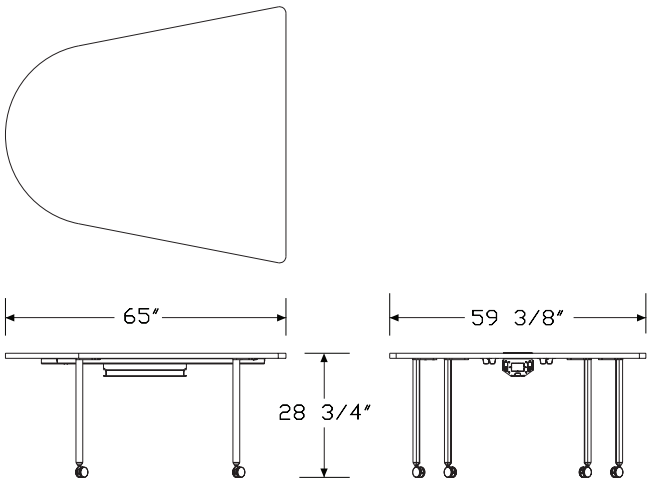

Specification Information

Step 1.

HZ580

Step 2. Edge

S.	squared-edge

Step 3. Depth

60	60″ deep

Step 4. Width

65	65″ wide

Step 5. Surface Material

L	high-pressure laminate top/thermoplastic edge
W	veneer top/veneer edge A
A	high-pressure laminate top/thermoplastic edge with MicrobeCare™ A

Prices for Steps 1-5.

	L	W	A
HZ580S. 60 65	$2323	4528	2427

Step 6. Power Access Cutout

NC	no cutout	+$0
C5	off-center cutout for logic mini (square) Y14xx and Y1412	+$65
L3	one center cutout for logic Y1425 3 port	+$65
L5	one center cutout for logic Y1425 5 port	+$65
L6	one center cutout for logic Y1425 6 port	+$65
TB	one center cutout for technology bucket	+$190

Step 7.

Top Finish

For high-pressure laminate top/thermoplastic edge (L) or high-pressure laminate top/thermoplastic edge with MicrobeCare™ (A)

125	natural maple (CP) A	+$0
126	natural cherry (CP) A	+$0
127	walnut (CP) A	+$0
139	light ash (CP) A	+$0
140	warm ash (CP) A	+$0
76	light brown walnut	+$0
8Q	folkstone grey (CP)	+$0
91	white (CP)	+$0
98	studio white (CP)	+$0
CL	cool grey neutral	+$0
HF	inner tone light	+$0
HP	light anigre	+$0
LBA	clear on ash (CP)	+$0
LBB	oak on ash (CP)	+$0
LBC	walnut on ash (CP)	+$0
LBF	neutral twill	+$0
LBJ	graphite twill	+$0
LBQ	white twill	+$0
LBR	phantom ecru A	+$0
LBS	phantom cocoa A	+$0
LBU	medium matte walnut (CP) A	+$0
LBV	warm grey teak A	+$0
LT	light tone	+$0
LU	soft white	+$0
UBK	ultra black (CP) A	+$0
WL	warm stone (CP)	+$0
WN	warm grey neutral	+$0

Top/Edge Finish

For veneer top/veneer edge (W)

2U	light brown walnut A	+$85
40	dark brown walnut A	+$85
CHD	noble cherry	+$85
ET	clear on ash A	+$85
EU	oak on ash A	+$85
EV	walnut on ash A	+$85
EW	medium matte walnut A	+$85
OK	white oak (nonstandard) A	+$85
UL	natural maple A	+$85
WHN	natural white oak	+$85

Step 8. Edge Finish

For high-pressure laminate top/thermoplastic edge (L) or high-pressure laminate top/thermoplastic edge with MicrobeCare™ (A)

125	natural maple (CP)	+$0
126	natural cherry (CP)	+$0
127	walnut (CP)	+$0
139	light ash (CP)	+$0
140	warm ash (CP)	+$0
76	light brown walnut	+$0
8Q	folkstone grey (CP)	+$0
91	white (CP)	+$0
98	studio white (CP)	+$0
CL	cool grey neutral	+$0
G1	graphite (CP)	+$0
HF	inner tone light	+$0
HP	light anigre	+$0
LBA	clear on ash (CP)	+$0
LBB	oak on ash (CP)	+$0
LBC	walnut on ash (CP)	+$0
LBF	neutral twill	+$0
LBJ	graphite twill	+$0
LBQ	white twill	+$0
LBR	phantom ecru	+$0
LBS	phantom cocoa	+$0
LBU	medium matte walnut (CP)	+$0
LBV	warm grey teak	+$0
LU	soft white	+$0
UBK	ultra black (CP)	+$0
WL	warm stone (CP)	+$0

Step 9. Leg Finish

Metallic Paint

611	beige mist metallic (CP)	+$0
613	silver (CP)	+$0
SNA	satin aluminum	+$135
SNB	satin bronze	+$135
SNC	satin carbon	+$135

Sand Texture Paint		
UBK	ultra black (CP)	+$0
8Q	folkstone grey (CP)	+$0
91	white (CP)	+$0
98	studio white (CP)	+$0
BK	black	+$0
G1	graphite (CP)	+$0
WL	warm stone (CP)	+$0
DB3	glacier	+$125
DN2	nightfall	+$125
DR1	canyon	+$125
OLF	olive	+$125

Step 10. Base Type		
C	casters	+$0
G	glides	+$0

OE1 Power Entry, Internal Direct Connect HZ700.

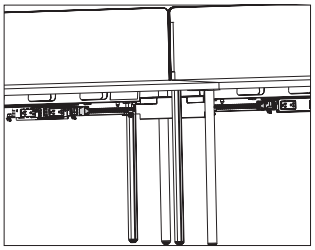

Product Information

Description

This power entry connects a building's electrical from a wall, floor, or column to the end of a 4-circuit junction block and distributes up to 4 20-amp circuits. UL Listed for use with OE1 Workspace Collection™ in the US and Canada.

Notes

OE1 modular power products are only compatible with other OE1 modular products.

Power entry can be field cut to the appropriate length.

Finish color on liquid tight conduit is black.

To manage and/or cover power entry, order power entry cover (HZ720.) separately.

A licensed electrician must wire the power entry to the building's electrical system.

Dimensions

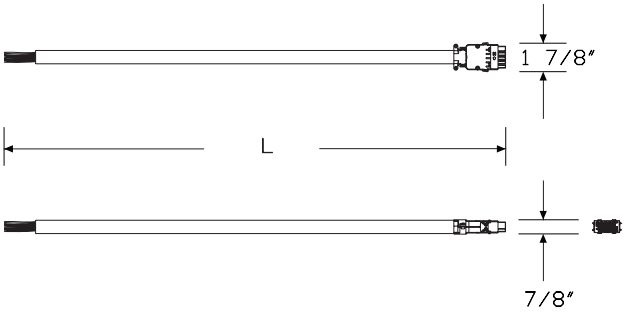

Specification Information

Step 1.

HZ700.

Step 2. Configuration

08 8-wire, 4 circuit, shared neutral

10 10-wire, 4-circuit, separate neutrals

Step 3. Entry Length

06 6′ long

12 12′ long

18 18′ long

Prices for Steps 1-3.

		06	12	18
HZ700.	**08**	$292	413	498
	10	$292	413	498

OE1 Power Entry, New York HZ710.

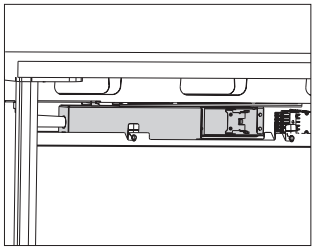

Product Information

Description

This power entry connects a building's electrical from a wall, floor, or column to the end of a 4-circuit junction block and distributes up to 4 20-amp circuits. UL Listed for use with OE1 Workspace Collection™ in the US and Canada.

Notes

OE1 modular power products are only compatible with other OE1 modular products.

A licensed electrician must wire the power entry to the building's electrical system.

Dimensions

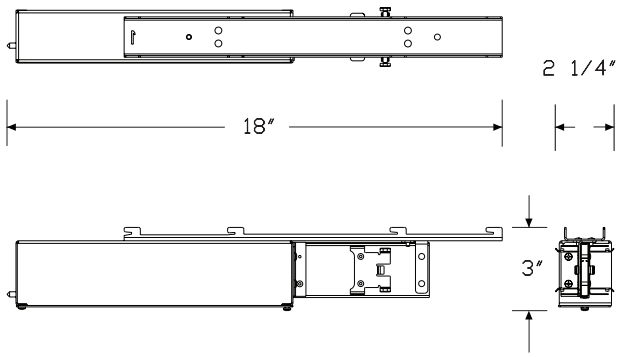

Specification Information

Step 1.

HZ710.

Step 2. Configuration

08	8-wire, 4 circuit, shared neutral
10	10-wire, 4-circuit, separate neutrals

Prices for Steps 1-2.

HZ710.	**08**	$473
	10	$473

OE1 Power Entry Cover HZ720.

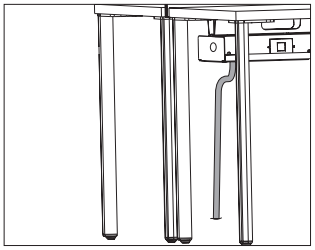

Product Information

Description

This mesh cover manages cables and covers the power entry. Attachment hardware included.

Notes

OE1 modular power products are only compatible with other OE1 modular products.

Dimensions

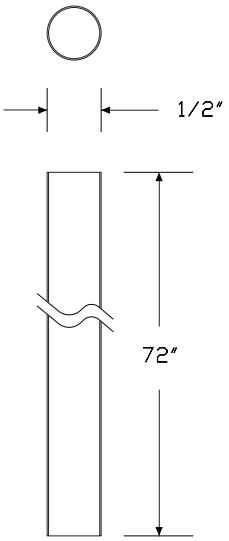

Specification Information

Step 1.

HZ720.

Step 2. Length

72	72″ long

Step 3. Attachment

B	for use with accessory bridge

Prices for Steps 1-3.

		B
HZ720.	**72**	$182

Step 4. Finish

UBK	ultra black (CP)	+$0
BK	black	+$0

OE1 Power Harness HZ730.

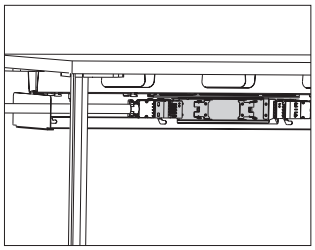

Product Information

Description

This power harness holds up to 4 receptacles.

Notes

1 harness can hold 4 receptacles, 2 on each side.

OE1 modular power products are only compatible with other OE1 modular products.

Dimensions

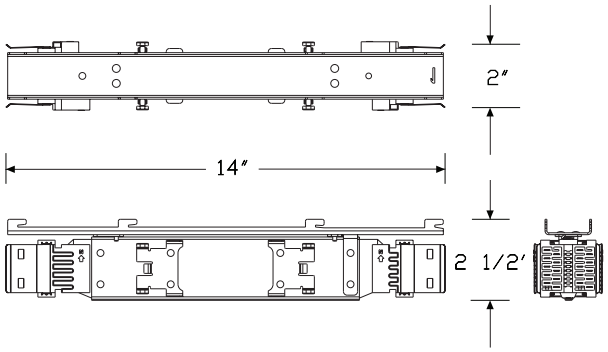

Specification Information

Step 1.

HZ730.

Step 2. Configuration

08	8-wire, 4 circuit, shared neutral
10	10-wire, 4-circuit, separate neutrals

Prices for Steps 1-2.

HZ730.	**08**	$198
	10	$198

OE1 Power Jumper HZ740.

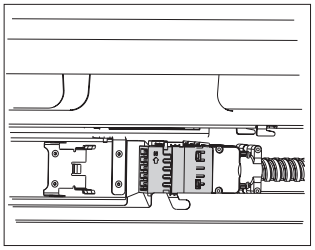

Product Information

Description

This power jumper distributes up to 4 20-amp circuits between 2 junction boxes. UL Listed for use with OE1 Workspace Collection™ in the US and Canada.

Notes

OE1 modular power products are only compatible with other OE1 modular products.

Dimensions

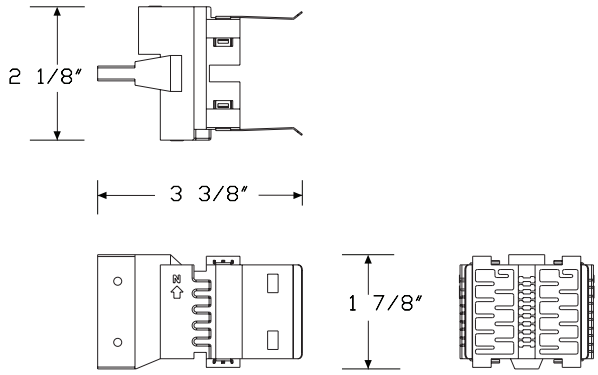

Specification Information

Step 1.

HZ740.

Step 2. Configuration

08	8-wire, 4 circuit, shared neutral
10	10-wire, 4-circuit, separate neutrals

Step 3. Width

42	42″ wide
48	48″ wide
54	54″ wide
60	60″ wide
66	66″ wide
72	72″ wide

Prices for Steps 1-3.

		42	48	54	60	66	72
HZ740.	**08**	$140	147	154	169	175	182
	10	$140	147	154	169	175	182

OE1 Receptacle, 4-Circuit, 15 Amp (Package of 4) HZ750.

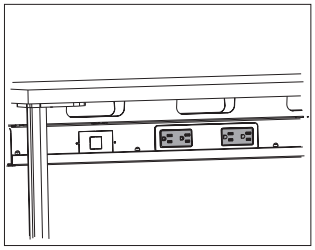

Product Information

Description

This 15-amp receptacle locks into the power harness. It is UL Listed and Canadian UL Listed. Package contains 4 receptacles.

Notes

OE1 modular power products are only compatible with other OE1 modular products.

Dimensions

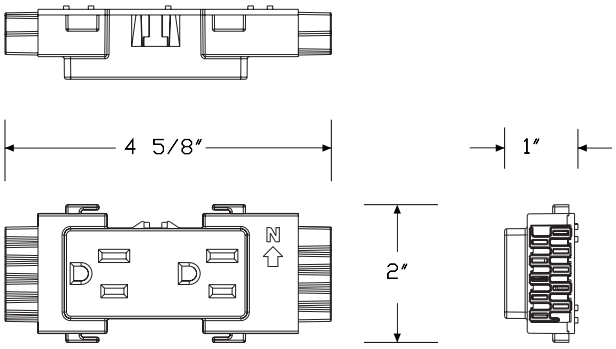

Specification Information

Step 1.

HZ750.

Step 2. Configuration

AN	8-wire duplex, shared neutral, circuit a
BN	8-wire duplex, shared neutral, circuit b
CN	8-wire duplex, shared neutral, circuit c
DN	8-wire duplex, shared neutral, circuit d
AG	8-wire duplex, shared neutral, circuit a, isolated ground
BG	8-wire duplex, shared neutral, circuit b, isolated ground
CG	8-wire duplex, shared neutral, circuit c, isolated ground
DG	8-wire duplex, shared neutral, circuit d, isolated ground
1N	10-wire duplex, independent neutral, circuit 1
2N	10-wire duplex, independent neutral, circuit 2
3N	10-wire duplex, independent neutral, circuit 3
4N	10-wire duplex, independent neutral, circuit 4
1G	10-wire duplex, independent neutral, circuit 1, isolated ground
2G	10-wire duplex, independent neutral, circuit 2, isolated ground
3G	10-wire duplex, independent neutral, circuit 3, isolated ground
4G	10-wire duplex, independent neutral, circuit 4, isolated ground

Prices for Steps 1-2.

HZ750.	**AN**	$165
	BN	$165
	CN	$165
	DN	$165
	AG	$165
	BG	$165
	CG	$165
	DG	$165
	1N	$165
	2N	$165
	3N	$165
	4N	$165
	1G	$165
	2G	$165
	3G	$165
	4G	$165

Step 3. Finish

UBK	ultra black (CP)	+$0
BK	black	+$0

OE1 Controlled Receptacle, 4-Circuit, 15 Amp (Package of 4) HZ760.

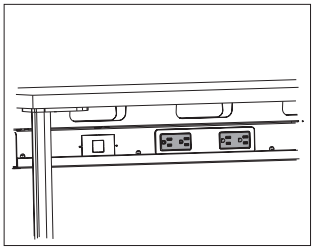

Product Information

Description

A controlled receptacle should be used for any receptacle that is under automated control by the energy management system. This 15-amp receptacle locks into the power harness. It is UL Listed and Canadian UL Listed. Package contains 4 receptacles.

Notes

This receptacle does not have any built-in control. It just has the controlled labeling. Receptacle must be controlled by some other means.

Receptacle depth is 1″.

OE1 modular power products are only compatible with other OE1 modular products.

Dimensions

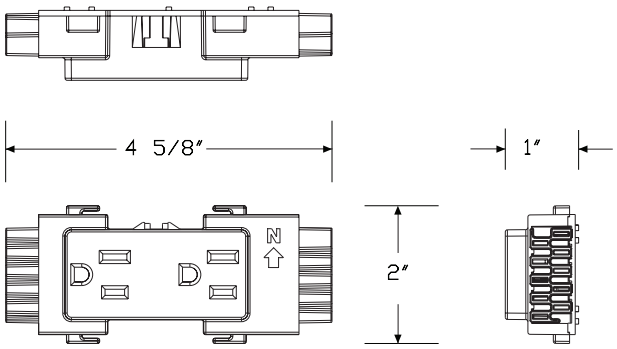

Specification Information

Step 1.

HZ760.

Step 2. Configuration

AN	8-wire duplex, shared neutral, circuit a
BN	8-wire duplex, shared neutral, circuit b
CN	8-wire duplex, shared neutral, circuit c
DN	8-wire duplex, shared neutral, circuit d
AG	8-wire duplex, shared neutral, circuit a, isolated ground
BG	8-wire duplex, shared neutral, circuit b, isolated ground
CG	8-wire duplex, shared neutral, circuit c, isolated ground
DG	8-wire duplex, shared neutral, circuit d, isolated ground
1N	10-wire duplex, independent neutral, circuit 1
2N	10-wire duplex, independent neutral, circuit 2
3N	10-wire duplex, independent neutral, circuit 3
4N	10-wire duplex, independent neutral, circuit 4
1G	10-wire duplex, independent neutral, circuit 1, isolated ground
2G	10-wire duplex, independent neutral, circuit 2, isolated ground
3G	10-wire duplex, independent neutral, circuit 3, isolated ground
4G	10-wire duplex, independent neutral, circuit 4, isolated ground

Prices for Steps 1-2.

HZ760.	**AN**	$161
	BN	$161
	CN	$161
	DN	$161
	AG	$161
	BG	$161
	CG	$161
	DG	$161
	1N	$161
	2N	$161
	3N	$161
	4N	$161
	1G	$161
	2G	$161
	3G	$161
	4G	$161

Step 3. Finish

UBK	ultra black (CP)	+$0
BK	black	+$0

OE1 Receptacle, 20 Amp HZ770.

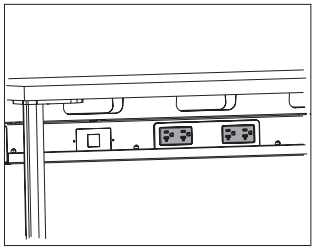

Product Information

Description

This 20-amp receptacle locks into the power harness. It provides power to equipment with a 20-amp standard plug head or cap. It also accepts 15-amp standard plug heads or caps. It is UL Listed and Canadian UL Listed. Package contains 1 receptacle.

Notes

Avoid overloading circuit by ensuring total connected load does not exceed 16 amps. If 1 piece of equipment requires all available power, do not use receptacle's second outlet or install additional receptacles on that circuit. In many cases, equipment requiring this receptacle will use all available power.

Receptacle depth is 1¼″.

OE1 modular power products are only compatible with other OE1 modular products.

Dimensions

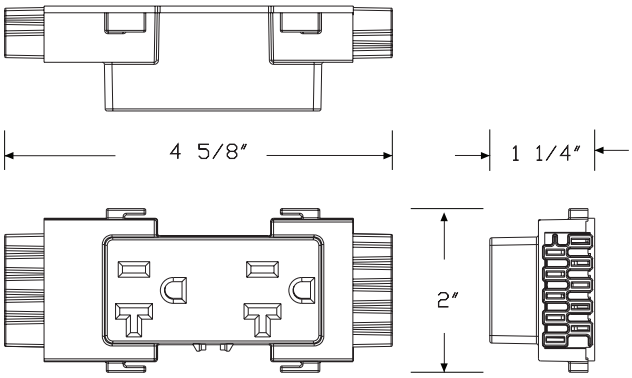

Specification Information

Step 1.

HZ770.

Step 2. Configuration

AN	8-wire duplex, shared neutral, circuit a
BN	8-wire duplex, shared neutral, circuit b
AG	8-wire duplex, shared neutral, circuit a, isolated ground
BG	8-wire duplex, shared neutral, circuit b, isolated ground
1N	10-wire duplex, independent neutral, circuit 1
2N	10-wire duplex, independent neutral, circuit 2
1G	10-wire duplex, independent neutral, circuit 1, isolated ground
2G	10-wire duplex, independent neutral, circuit 2, isolated ground

Prices for Steps 1-2.

HZ770.	**AN**	$63
	BN	$63
	AG	$63
	BG	$63
	1N	$63
	2N	$63
	1G	$63
	2G	$63

Step 3. Finish

UBK	ultra black (CP)	+$0
BK	black	+$0

OE1 Controlled Receptacle, 20 Amp HZ780.

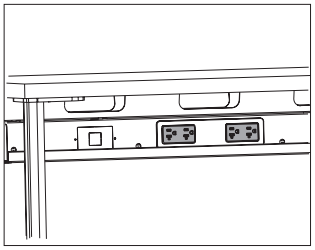

Product Information

Description

A controlled receptacle should be used for any receptacle that is under automated control by the energy management system. This 20-amp receptacle locks into the power harness. It provides power to equipment with a 20-amp standard plug head or cap. It also accepts 15-amp standard plug heads or caps. It is UL Listed and Canadian UL Listed. Package contains 1 receptacle.

Notes

Avoid overloading circuit by ensuring total connected load does not exceed 16 amps. If 1 piece of equipment requires all available power, do not use receptacle's second outlet or install additional receptacles on that circuit. In many cases, equipment requiring this receptacle will use all available power.

This receptacle does not have any built-in control. It just has the controlled labeling. Receptacle must be controlled by some other means.

Receptacle depth is 1¼″.

OE1 modular power products are only compatible with other OE1 modular products.

Dimensions

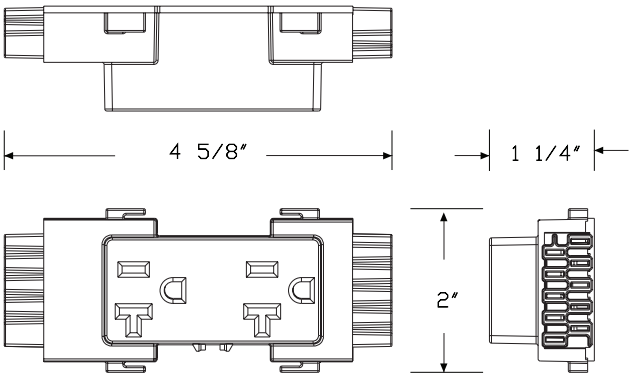

Specification Information

Step 1.

HZ780.

Step 2. Configuration

AN	8-wire duplex, shared neutral, circuit a
BN	8-wire duplex, shared neutral, circuit b
AG	8-wire duplex, shared neutral, circuit a, isolated ground
BG	8-wire duplex, shared neutral, circuit b, isolated ground
1N	10-wire duplex, independent neutral, circuit 1
2N	10-wire duplex, independent neutral, circuit 2
1G	10-wire duplex, independent neutral, circuit 1, isolated ground
2G	10-wire duplex, independent neutral, circuit 2, isolated ground

Prices for Steps 1-2.

HZ780.	**AN**	$63
	BN	$63
	AG	$63
	BG	$63
	1N	$63
	2N	$63
	1G	$63
	2G	$63

Step 3. Finish

UBK	ultra black (CP)	+$0
BK	black	+$0

OE1 Movable Screen, Pari Y1141.

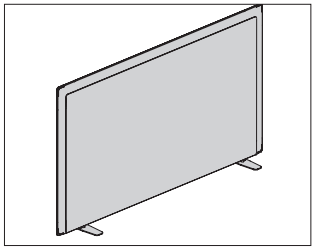

Product Information

Description

This movable, tackable screen sits on top of work surfaces to extend the overall height and provide boundary and privacy on tables, benches and systems products. It has a frameless all-fabric design and is freestanding. Base finish available in folkstone grey or black.

Notes

Datum heights reflect placement on 29″-high fixed-height work surface and align with Canvas datum lines. Screen can be used on fixed, level work surface.

Specify width of screen to match width of work surface.

Screen heights are nominal. Actual screen heights are: 12½″ (14), 16½″ (18), and 23½″ (25).

Screen accepts Customer's Own Material (COM). Yardage is estimated for directional, 54″ wide fabrics.

For vertical fabric direction (T, E):

Height—Yardage

14—1.17

18—1.42

25—1.83

For horizontal fabric direction (R, D):

Width—Yardage

42—1.51

48—1.70

54—1.89

60—2.08

66—2.27

72—2.46

For information on multiple quantities or directional fabrics, contact COM Department. See Order Information in appendices.

Dimensions

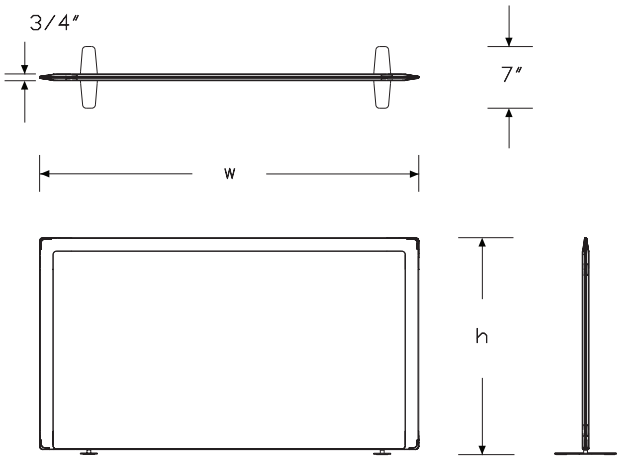

Specification Information

Step 1.

Y1141.

Step 2. Height

14	14″ high (to reach 42″ datum)
18	18″ high (to reach 46″ datum)
25	25″ high (to reach 53″ datum)

Step 3. Width

42	42″ wide
48	48″ wide
54	54″ wide
60	60″ wide
66	66″ wide
72	72″ wide

Step 4. Surface Material

For 42″ wide (42) or 48″ wide (48)

D	tackable fabric, horizontal with MicrobeCare™
E	tackable fabric with MicrobeCare™
R	tackable fabric, horizontal
T	tackable fabric

For 54″ wide (54), 60″ wide (60), 66″ wide (66), or 72″ wide (72)

D	tackable fabric, horizontal with MicrobeCare™
R	tackable fabric, horizontal

Prices for Steps 1-4.

			D	E	R	T
Y1141.	**14**	**42**	$799	799	732	732
		48	$824	824	757	757
		54	$848	—	782	—
		60	$874	—	808	—
		66	$914	—	846	—
		72	$965	—	898	—
	18	**42**	$965	965	898	898
		48	$989	989	923	923
		54	$1015	—	949	—
		60	$1042	—	975	—
		66	$1079	—	1012	—
		72	$1129	—	1061	—
	25	**42**	$1096	1096	1030	1030
		48	$1121	1121	1055	1055
		54	$1148	—	1081	—
		60	$1174	—	1107	—
		66	$1211	—	1144	—
		72	$1261	—	1195	—

Step 5. Base Finish

8Q	folkstone grey (CP)	+$0
BK	black	+$0
UBK	ultra black (CP)	+$0

Step 6. Fabric

For 14″ high (to reach 42″ datum) (14) with 42″ wide (42)

Price Category B	+$149
Price Category 1	+$0
Price Category 2	+$36
Price Category 3	+$86
Price Category 4	+$155
Price Category 5	+$263
Price Category C	+$203
Price Category E	+$305

For 14″ high (to reach 42″ datum) (14) with 48″ wide (48)

Price Category B	+$169
Price Category 1	+$0
Price Category 2	+$41
Price Category 3	+$98
Price Category 4	+$174
Price Category 5	+$296
Price Category C	+$228
Price Category E	+$344

For 18″ high (to reach 46″ datum) (18) or 25″ high (to reach 53″ datum) (25) with 42″ wide (42)

Price Category B	+$149
Price Category 1	+$0
Price Category 2	+$36
Price Category 3	+$86
Price Category 4	+$155
Price Category 5	+$263
Price Category C	+$203
Price Category E	+$305

For 18″ high (to reach 46″ datum) (18) or 25″ high (to reach 53″ datum) (25) with 48″ wide (48)	
Price Category B	+$169
Price Category 1	+$0
Price Category 2	+$41
Price Category 3	+$98
Price Category 4	+$174
Price Category 5	+$296
Price Category C	+$228
Price Category E	+$344

For 14″ high (to reach 42″ datum) (14) with 54″ wide (54)	
Price Category B	+$197
Price Category 1	+$0
Price Category 2	+$48
Price Category 3	+$115
Price Category 4	+$204
Price Category 5	+$347
Price Category C	+$266
Price Category E	+$403

For 14″ high (to reach 42″ datum) (14) with 60″ wide (60)	
Price Category B	+$217
Price Category 1	+$0
Price Category 2	+$52
Price Category 3	+$126
Price Category 4	+$224
Price Category 5	+$382
Price Category C	+$294
Price Category E	+$444

For 14″ high (to reach 42″ datum) (14) with 66″ wide (66)	
Price Category B	+$236
Price Category 1	+$0
Price Category 2	+$56
Price Category 3	+$138
Price Category 4	+$245
Price Category 5	+$418
Price Category C	+$320
Price Category E	+$484

For 14″ high (to reach 42″ datum) (14) with 72″ wide (72)	
Price Category B	+$256
Price Category 1	+$0
Price Category 2	+$61
Price Category 3	+$149
Price Category 4	+$265
Price Category 5	+$451
Price Category C	+$347
Price Category E	+$523

For 18″ high (to reach 46″ datum) (18) or 25″ high (to reach 53″ datum) (25) with 54″ wide (54)	
Price Category B	+$197
Price Category 1	+$0
Price Category 2	+$48
Price Category 3	+$115
Price Category 4	+$204
Price Category 5	+$347
Price Category C	+$266
Price Category E	+$403

For 18″ high (to reach 46″ datum) (18) or 25″ high (to reach 53″ datum) (25) with 60″ wide (60)	
Price Category B	+$217
Price Category 1	+$0
Price Category 2	+$52
Price Category 3	+$126
Price Category 4	+$224
Price Category 5	+$382
Price Category C	+$294
Price Category E	+$444

For 18″ high (to reach 46″ datum) (18) or 25″ high (to reach 53″ datum) (25) with 66″ wide (66)	
Price Category B	+$236
Price Category 1	+$0
Price Category 2	+$56
Price Category 3	+$138
Price Category 4	+$245
Price Category 5	+$418
Price Category C	+$320
Price Category E	+$484

For 18" high (to reach 46" datum) (18) or 25" high (to reach 53" datum) (25) with 72" wide (72)	
Price Category B	+$256
Price Category 1	+$0
Price Category 2	+$61
Price Category 3	+$149
Price Category 4	+$265
Price Category 5	+$451
Price Category C	+$347
Price Category E	+$523

OE1 Movable Screen, Flat Edge Y1142.

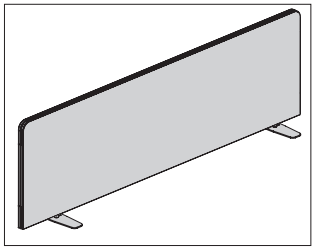

Product Information

Description

This movable, tackable screen sits on top of work surfaces to extend the overall height and provide boundary and privacy on tables, benches and systems products. It has a frameless all-fabric design with a flat edge and is freestanding. Base finish available in folkstone grey or black.

Notes

Datum heights reflect placement on 29″-high fixed-height work surface and align with Canvas datum lines. Screen can be used on fixed, level work surface.

Specify width of screen to match width of work surface.

Screen heights are nominal. Actual screen heights are: 12½″ (14), 16½″ (18), and 23½″ (25).

Screen accepts Customer's Own Material (COM). Yardage is estimated for directional, 54″ wide fabrics.

For vertical fabric direction (T, E):

Height—Yardage

14—1.17

18—1.42

25—1.83

For horizontal fabric direction (R, D):

Width—Yardage

42—1.51

48—1.70

54—1.89

60—2.08

66—2.27

72—2.46

For information on multiple quantities or directional fabrics, contact COM Department. See Order Information in appendices.

Dimensions

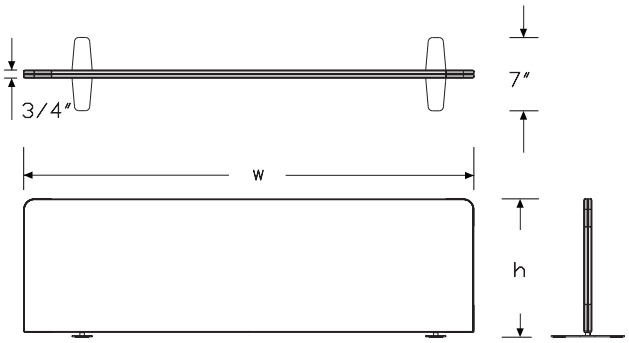

Specification Information

Step 1.

Y1142.

Step 2. Height

14 14″ high (to reach 42″ datum)

18 18″ high (to reach 46″ datum)

25 25″ high (to reach 53″ datum)

Step 3. Width

42 42″ wide

48 48″ wide

54 54″ wide

60 60″ wide

66 66″ wide

72 72″ wide

Step 4. Surface Material

For 42″ wide (42) or 48″ wide (48)

D tackable fabric, horizontal with MicrobeCare™

E tackable fabric with MicrobeCare™

R tackable fabric, horizontal

T tackable fabric

For 54″ wide (54), 60″ wide (60), 66″ wide (66), or 72″ wide (72)

D tackable fabric, horizontal with MicrobeCare™

R tackable fabric, horizontal

Prices for Steps 1-4.

			D	E	R	T
Y1142.	**14**	**42**	$629	629	563	563
		48	$655	655	589	589
		54	$681	—	614	—
		60	$706	—	639	—
		66	$745	—	678	—
		72	$797	—	729	—
	18	**42**	$757	757	690	690
		48	$782	782	716	716
		54	$808	—	741	—
		60	$834	—	767	—
		66	$872	—	805	—
		72	$923	—	857	—

25	**42**	$860	860	793	793
	48	$884	884	817	817
	54	$909	—	843	—
	60	$935	—	869	—
	66	$975	—	907	—
	72	$1024	—	958	—

Step 5. Base Finish		
8Q	folkstone grey (CP)	+$0
BK	black	+$0
UBK	ultra black (CP)	+$0

Step 6. Fabric

For 14″ high (to reach 42″ datum) (14) with 42″ wide (42)

Price Category 1	+$0
Price Category 2	+$36
Price Category 3	+$86
Price Category 4	+$155
Price Category 5	+$263
Price Category B	+$149
Price Category C	+$203
Price Category E	+$305

For 14″ high (to reach 42″ datum) (14) with 48″ wide (48)

Price Category 1	+$0
Price Category 2	+$41
Price Category 3	+$98
Price Category 4	+$174
Price Category 5	+$296
Price Category B	+$169
Price Category C	+$228
Price Category E	+$344

For 18″ high (to reach 46″ datum) (18) or 25″ high (to reach 53″ datum) (25) with 42″ wide (42)

Price Category 1	+$0
Price Category 2	+$36
Price Category 3	+$86
Price Category 4	+$155
Price Category 5	+$263
Price Category B	+$149
Price Category C	+$203
Price Category E	+$305

For 18″ high (to reach 46″ datum) (18) or 25″ high (to reach 53″ datum) (25) with 48″ wide (48)

Price Category 1	+$0
Price Category 2	+$41
Price Category 3	+$98
Price Category 4	+$174
Price Category 5	+$296
Price Category B	+$169
Price Category C	+$228
Price Category E	+$344

For 14″ high (to reach 42″ datum) (14) with 54″ wide (54)

Price Category 1	+$0
Price Category 2	+$48
Price Category 3	+$115
Price Category 4	+$204
Price Category 5	+$347
Price Category B	+$197
Price Category C	+$266
Price Category E	+$403

For 14″ high (to reach 42″ datum) (14) with 60″ wide (60)

Price Category 1	+$0
Price Category 2	+$52
Price Category 3	+$126
Price Category 4	+$224
Price Category 5	+$382
Price Category B	+$217
Price Category C	+$294
Price Category E	+$444

For 14″ high (to reach 42″ datum) (14) with 66″ wide (66)

Price Category 1	+$0
Price Category 2	+$56
Price Category 3	+$138
Price Category 4	+$245
Price Category 5	+$418
Price Category B	+$236
Price Category C	+$320
Price Category E	+$484

For 14″ high (to reach 42″ datum) (14) with 72″ wide (72)	
Price Category 1	+$0
Price Category 2	+$61
Price Category 3	+$149
Price Category 4	+$265
Price Category 5	+$451
Price Category B	+$256
Price Category C	+$347
Price Category E	+$523

For 18″ high (to reach 46″ datum) (18) or 25″ high (to reach 53″ datum) (25) with 54″ wide (54)	
Price Category 1	+$0
Price Category 2	+$48
Price Category 3	+$115
Price Category 4	+$204
Price Category 5	+$347
Price Category B	+$197
Price Category C	+$266
Price Category E	+$403

For 18″ high (to reach 46″ datum) (18) or 25″ high (to reach 53″ datum) (25) with 60″ wide (60)	
Price Category 1	+$0
Price Category 2	+$52
Price Category 3	+$126
Price Category 4	+$224
Price Category 5	+$382
Price Category B	+$217
Price Category C	+$294
Price Category E	+$444

For 18″ high (to reach 46″ datum) (18) or 25″ high (to reach 53″ datum) (25) with 66″ wide (66)	
Price Category 1	+$0
Price Category 2	+$56
Price Category 3	+$138
Price Category 4	+$245
Price Category 5	+$418
Price Category B	+$236
Price Category C	+$320
Price Category E	+$484

For 18″ high (to reach 46″ datum) (18) or 25″ high (to reach 53″ datum) (25) with 72″ wide (72)	
Price Category 1	+$0
Price Category 2	+$61
Price Category 3	+$149
Price Category 4	+$265
Price Category 5	+$451
Price Category B	+$256
Price Category C	+$347
Price Category E	+$523

OE1 Metal Boundary Screen Y1143.

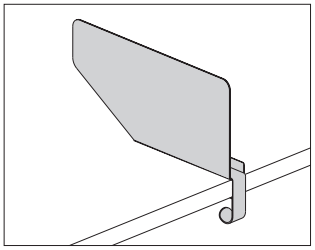

Product Information

Description

This metal screen attaches to the front of a work surface to provide division and boundary between workers. Steel construction allows for attachment of magnets and Ubi name tag. Screen available with liner in choice of colors. Attachment thumb screw included.

Notes

Screen attaches to square edge surfaces with minimum 1″ up to 1½″ nominal thickness.

Screen height is nominal. Actual screen height is 8.7″.

Liner is available on flange side (righthand side when attached to work surface) only.

Screen provides boundary on rectangular surface work tables where the legs are positioned under the worksurface by 3½″.

Order the following accessories separately:

- Ubi name tag (YT410.)
- Rare earth magnets (Y7234.)

Screen is recommended for use on the OE1 communal tables (single and double sided), OE1 rectangular tables, Renew™ Link single-sided and back-to-back rectangular height-adjustable benches (DU1A, DU2A), and on any other benching or table surface with appropriate thickness requirement and that use rectangular work surfaces. It is not recommended for use on Renew Link back-to-back trapezoid height-adjustable bench (DU2T).

Dimensions

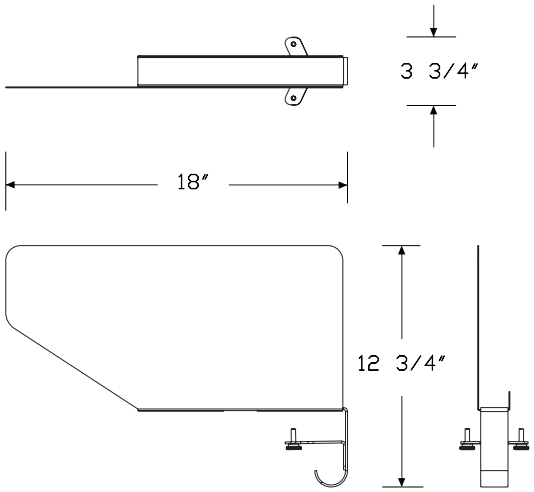

Specification Information

Step 1.

Y1143.

Step 2. Height

9	9″ high	

Step 3. Depth

18	18″ deep	

Prices for Steps 1-3.

		18
Y1143.	**9**	$205

Step 4. Liner

N	no liner	+$0
L	liner (flange side only)	+$70

Step 5. Liner Fabric

For liner (flange side only) (L)

Price Category 4 +$0

Step 6. Finish

Metallic Paint

611	beige mist metallic (CP)	+$0
613	silver (CP)	+$0
SNA	satin aluminum	+$10
SNB	satin bronze	+$10
SNC	satin carbon	+$10

Sand Texture Paint

UBK	ultra black (CP)	+$0
8Q	folkstone grey (CP)	+$0
91	white (CP)	+$0
98	studio white (CP)	+$0
BK	black	+$0
G1	graphite (CP)	+$0
WL	warm stone (CP)	+$0
DB3	glacier	+$8
DN2	nightfall	+$8
DR1	canyon	+$8
OLF	olive	+$8

OE1 Freestanding Storage Trolley, Individual HZ800.

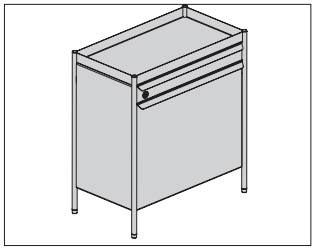

Product Information

Description

This individual OE1 Workspace Collection™ Freestanding Storage Trolley is painted metal and comes on glides. It provides 3 configurations of a top shelf/bottom shelf, top drawer/bottom shelf, or top drawer/bottom tip-out bin. Options include a lock and file divider.

Notes

Drawer contains full-extension slides. Tip-out bin (DT) with filing (F) option accommodates front-to-back filing.

Filing option (F) includes a rail to hang files and a divider. Divider color matches storage unit color.

Order optional accessories separately:

- OE1 storage liner (HZ840.)
- OE1 cushion top (HZ850.)
- OE1 bag hook (HZ870.)
- OE1 file divider add-on (HZ880.)
- OE1 storage organizer (HZ860.)

For keyed-alike locks, order lock plugs separately. See Keyed-Alike Information in appendices.

See planning guide for additional information.

Dimensions

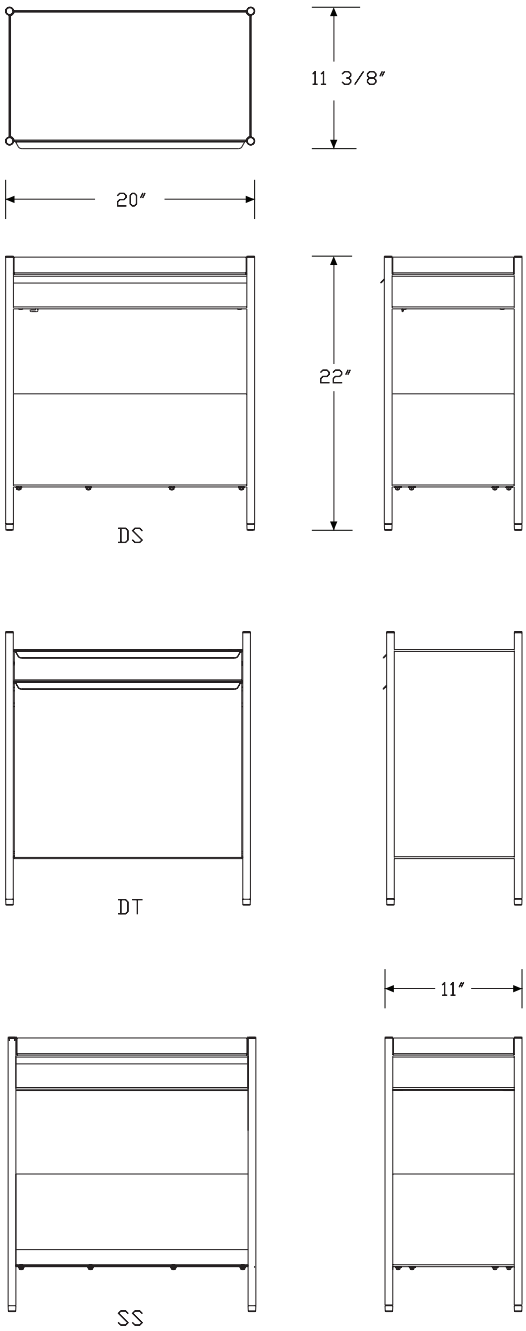

OE1 Freestanding Storage Trolley, Individual *continued*

Specification Information

Step 1.

HZ800.

Step 2. Width

20	20″ wide

Step 3. Depth

11	11″ deep

Step 4. Configuration

SS	top shelf/bottom shelf
DS	top drawer/bottom shelf
DT	top drawer/bottom tip-out bin

Step 5. Lock

For top shelf/bottom shelf (SS)

N	no lock

For top drawer/bottom shelf (DS) or top drawer/bottom tip-out bin (DT)

L	lock
N	no lock

Step 6. Interior Option

For top drawer/bottom tip-out bin (DT)

F	filing option
N	no interior option

For top shelf/bottom shelf (SS) or top drawer/bottom shelf (DS)

N	no interior option

Prices for Steps 1-6.

	SSNN	DSLN	DSNN	DTLF	DTLN	DTNF
HZ800. 20 11	$891	1072	997	1470	1383	1397

	DTNN
HZ800. 20 11	$1310

Step 7. Finish

Metallic Paint

611	beige mist metallic (CP)	+$0
613	silver (CP)	+$0
SNA	satin aluminum	+$30
SNB	satin bronze	+$30
SNC	satin carbon	+$30

Sand Texture Paint

UBK	ultra black (CP)	+$0
8Q	folkstone grey (CP)	+$0
91	white (CP)	+$0
98	studio white (CP)	+$0
BK	black	+$0
G1	graphite (CP)	+$0
WL	warm stone (CP)	+$0
DB3	glacier	+$20
DN2	nightfall	+$20
DR1	canyon	+$20
OLF	olive	+$20

Step 8. Lock Option

For lock (L)

KA	keyed alike, black	+$0
KQ	keyed alike, chrome	+$0
KD	keyed differently, black	+$0
KC	keyed differently, chrome	+$0

OE1 Mobile Storage Trolley, Individual HZ820.

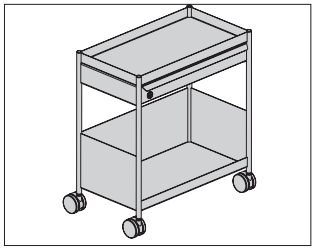

Product Information

Description

This individual OE1 Workspace Collection™ Mobile Storage Trolley is painted metal and comes on casters. It provides 3 configurations of a top shelf/bottom shelf, top drawer/bottom shelf, or top drawer/bottom tip-out bin. Options include a lock and file divider.

Notes

Drawer contains full-extension slides. Tip-out bin (DT) with filing (F) option accommodates front-to-back filing.

Divider color matches storage unit color.

Order optional accessories separately:

- OE1 storage liner (HZ840.)
- OE1 cushion top (HZ850.)
- OE1 bag hook (HZ870.)
- OE1 file divider add-on (HZ880.)
- OE1 storage organizer (HZ860.)

For keyed-alike locks, order lock plugs separately. See Keyed-Alike Information in appendices.

See planning guide for additional information.

Dimensions

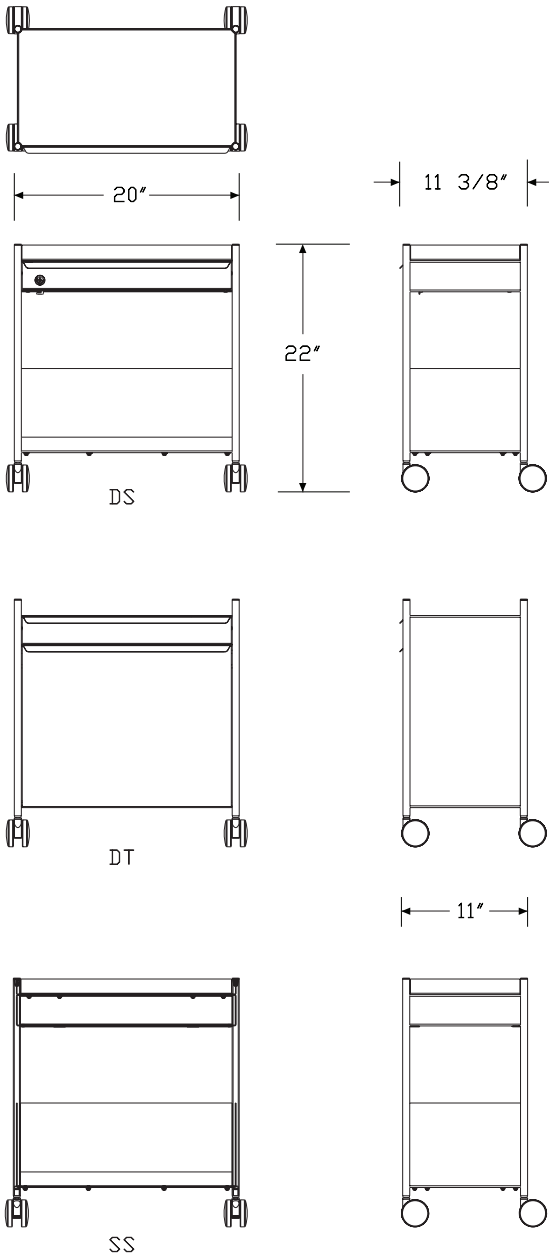

OE1 Mobile Storage Trolley, Individual *continued*

Specification Information

Step 1.

HZ820.

Step 2. Width

20	20″ wide

Step 3. Depth

11	11″ deep

Step 4. Configuration

SS	top shelf/bottom shelf
DS	top drawer/bottom shelf
DT	top drawer/bottom tip-out bin

Step 5. Lock

For top shelf/bottom shelf (SS)

N	no lock

For top drawer/bottom shelf (DS) or top drawer/bottom tip-out bin (DT)

L	lock
N	no lock

Step 6. Interior Option

For top drawer/bottom tip-out bin (DT)

F	filing option
N	no interior option

For top shelf/bottom shelf (SS) or top drawer/bottom shelf (DS)

N	no interior option

Prices for Steps 1-6.

	SSNN	DSLN	DSNN	DTLF	DTLN	DTNF
HZ820. 20 11	$866	1046	971	1445	1358	1370

	DTNN
HZ820. 20 11	$1284

Step 7. Finish

Metallic Paint

611	beige mist metallic (CP)	+$0
613	silver (CP)	+$0
SNA	satin aluminum	+$30
SNB	satin bronze	+$30
SNC	satin carbon	+$30

Sand Texture Paint

UBK	ultra black (CP)	+$0
8Q	folkstone grey (CP)	+$0
91	white (CP)	+$0
98	studio white (CP)	+$0
BK	black	+$0
G1	graphite (CP)	+$0
WL	warm stone (CP)	+$0
DB3	glacier	+$20
DN2	nightfall	+$20
DR1	canyon	+$20
OLF	olive	+$20

Step 8. Lock Option

For lock (L)

KA	keyed alike, black	+$0
KQ	keyed alike, chrome	+$0
KD	keyed differently, black	+$0
KC	keyed differently, chrome	+$0

OE1 Mobile Storage Trolley, Individual-Extended

HZ825.

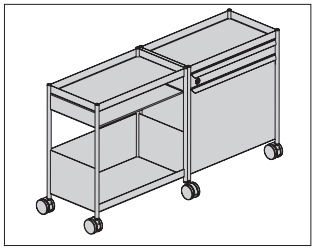

Product Information

Description

This individual-extended OE1 Workspace Collection™ Mobile Storage Trolley is painted metal and comes on casters. It provides 9 configurations through any combination of a top shelf/bottom shelf, top drawer/bottom shelf, or top drawer/bottom tip-out bin on each side. Storage is positioned to face an individual user. Options include a lock and file divider.

Notes

Drawer contains full-extension slides. Tip-out bin (DT) with filing (F) option accommodates front-to-back filing.

Divider color matches storage unit color.

Order optional accessories separately:

- OE1 storage liner (HZ840.)
- OE1 cushion top (HZ850.)
- OE1 bag hook (HZ870.)
- OE1 file divider add-on (HZ880.)
- OE1 storage organizer (HZ860.)

Lock options are the same on both sides.

For keyed-alike locks, order lock plugs separately. See Keyed-Alike Information in appendices.

See planning guide for additional information.

Dimensions

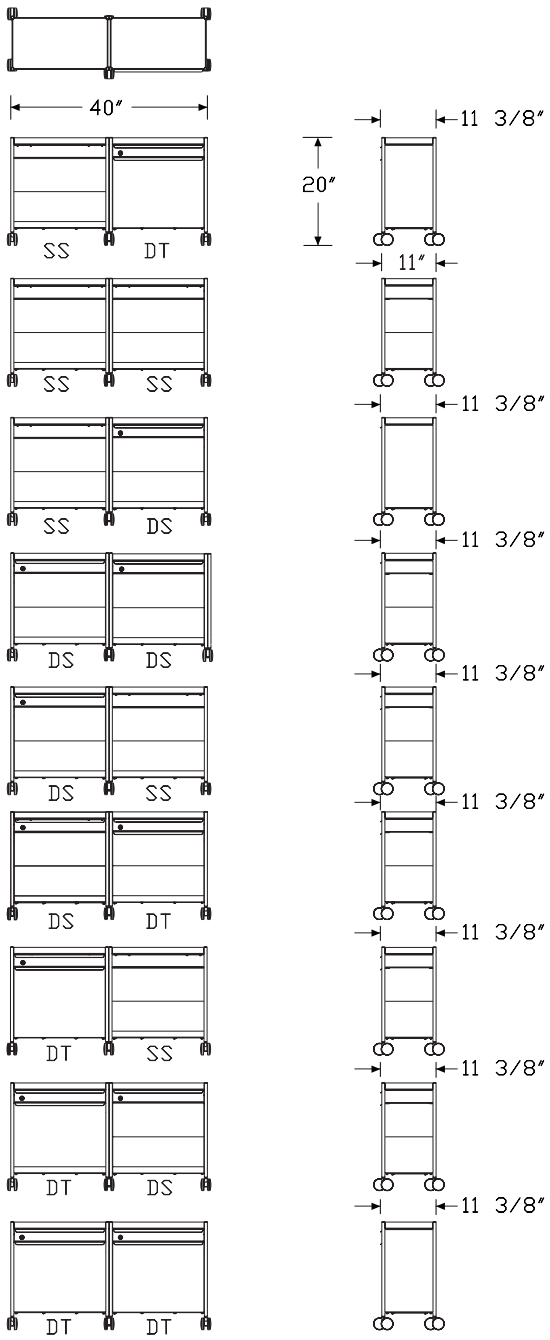

OE1 Storage

Specification Information

Step 1.

HZ825.

Step 2. Width

40 40″ wide

Step 3. Depth

11 11″ deep

Step 4. Configuration Left

SS top shelf/bottom shelf
DS top drawer/bottom shelf
DT top drawer/bottom tip-out bin

Step 5. Configuration Right

SS top shelf/bottom shelf
DS top drawer/bottom shelf
DT top drawer/bottom tip-out bin

Step 6. Lock

For top shelf/bottom shelf (SS) with top shelf/bottom shelf (SS)

N no lock

For top shelf/bottom shelf (SS), top drawer/bottom shelf (DS), or top drawer/bottom tip-out bin (DT) with top shelf/bottom shelf (SS), top drawer/bottom shelf (DS), or top drawer/bottom tip-out bin (DT)

N no lock
L lock

For top drawer/bottom shelf (DS) or top drawer/bottom tip-out bin (DT) with top drawer/bottom shelf (DS) or top drawer/bottom tip-out bin (DT)

N no lock
L lock

Step 7. Interior Option

For top shelf/bottom shelf (SS), top drawer/bottom shelf (DS), or top drawer/bottom tip-out bin (DT) with top shelf/bottom shelf (SS), top drawer/bottom shelf (DS), or top drawer/bottom tip-out bin (DT)

N no interior option
F filing option

For top drawer/bottom tip-out bin (DT) with top drawer/bottom tip-out bin (DT)

N no interior option
F filing option

For top shelf/bottom shelf (SS) or top drawer/bottom shelf (DS) with top shelf/bottom shelf (SS) or top drawer/bottom shelf (DS)

N no interior option

Prices for Steps 1-7.

	SSSSNN	SSDSNN	SSDSLN	SSDTNN	SSDTNF	SSDTLN
HZ825. 40 11	$1835	1940	2014	2357	2444	2432

	SSDTLF	DSSSNN	DSSSLN	DSDSNN	DSDSLN	DSDTNN
HZ825. 40 11	$2519	1940	2014	2045	2193	2463

	DSDTNF	DSDTLN	DSDTLF	DTSSNN	DTSSNF	DTSSLN
HZ825. 40 11	$2549	2612	2697	2357	2444	2432

	DTSSLF	DTDSNN	DTDSNF	DTDSLN	DTDSLF	DTDTNN
HZ825. 40 11	$2519	2463	2549	2612	2697	2881

	DTDTNF	DTDTLN	DTDTLF
HZ825. 40 11	$3054	3030	3203

Step 8. Finish

Metallic Paint

611	beige mist metallic (CP)	+$0
613	silver (CP)	+$0
SNA	satin aluminum	+$60
SNB	satin bronze	+$60
SNC	satin carbon	+$60

Sand Texture Paint

UBK	ultra black (CP)	+$0
8Q	folkstone grey (CP)	+$0
91	white (CP)	+$0
98	studio white (CP)	+$0
BK	black	+$0
G1	graphite (CP)	+$0
WL	warm stone (CP)	+$0
DB3	glacier	+$50
DN2	nightfall	+$50
DR1	canyon	+$50
OLF	olive	+$50

Step 9. Lock Option		
For lock (L)		
KA	keyed alike, black	+$0
KQ	keyed alike, chrome	+$0
KD	keyed differently, black	+$0
KC	keyed differently, chrome	+$0

OE1 Mobile Storage Trolley, Shared-Extended HZ830.

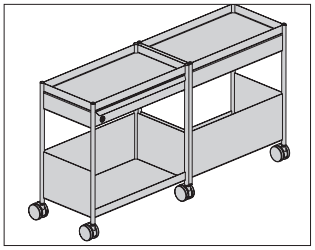

Product Information

Description

This shared-extended OE1 Workspace Collection™ Mobile Storage Trolley is painted metal and comes on casters. It provides 3 configurations of a top shelf/bottom shelf, top drawer/bottom shelf, or top drawer/bottom tip-out bin, mirrored on each side. Storage is intended to be shared between 2 users. Options include a lock and file divider.

Notes

Configuration selection will be the same on both sides.

Drawer contains full-extension slides. Tip-out bin (DT) with filing (F) option accommodates front-to-back filing.

Divider color matches storage unit color.

Order optional accessories separately:

- OE1 storage liner (HZ840.)
- OE1 cushion top (HZ850.)
- OE1 bag hook (HZ870.)
- OE1 file divider add-on (HZ880.)
- OE1 storage organizer (HZ860.)

For keyed-alike locks, order lock plugs separately. See Keyed-Alike Information in appendices.

See planning guide for additional information.

Dimensions

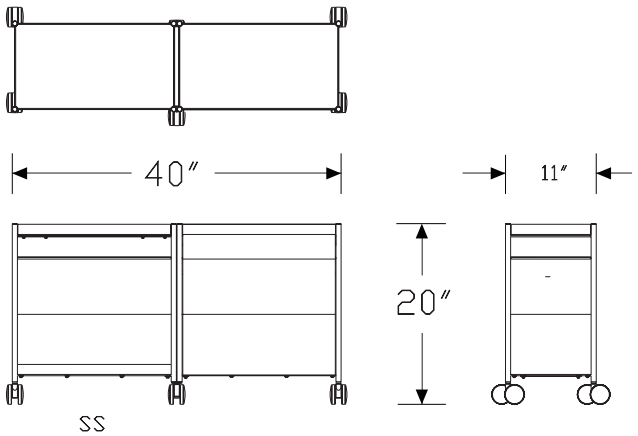

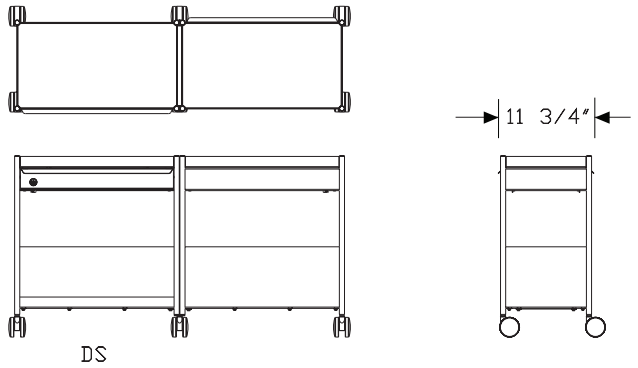

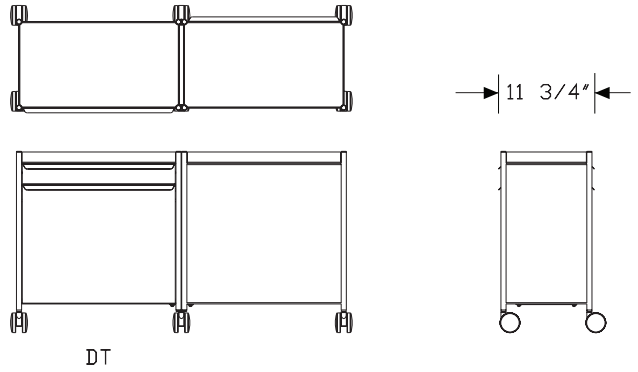

OE1 Mobile Storage Trolley, Shared-Extended *continued*

Specification Information

Step 1.

HZ830.

Step 2. Width

40	40″ wide

Step 3. Depth

11	11″ deep

Step 4. Configuration

SS	top shelf/bottom shelf
DS	top drawer/bottom shelf
DT	top drawer/bottom tip-out bin

Step 5. Lock

For top shelf/bottom shelf (SS)

N	no lock

For top drawer/bottom shelf (DS) or top drawer/bottom tip-out bin (DT)

L	lock
N	no lock

Step 6. Interior Option

For top drawer/bottom tip-out bin (DT)

F	filing option
N	no interior option

For top shelf/bottom shelf (SS) or top drawer/bottom shelf (DS)

N	no interior option

Prices for Steps 1-6.

	SSNN	DSLN	DSNN	DTLF	DTLN	DTNF
HZ830. 40 11	$1835	2193	2045	3203	3030	3054

	DTNN
HZ830. 40 11	$2881

Step 7. Finish

Metallic Paint

611	beige mist metallic (CP)	+$0
613	silver (CP)	+$0
SNA	satin aluminum	+$60
SNB	satin bronze	+$60
SNC	satin carbon	+$60

Sand Texture Paint

UBK	ultra black (CP)	+$0
8Q	folkstone grey (CP)	+$0
91	white (CP)	+$0
98	studio white (CP)	+$0
BK	black	+$0
G1	graphite (CP)	+$0
WL	warm stone (CP)	+$0
DB3	glacier	+$50
DN2	nightfall	+$50
DR1	canyon	+$50
OLF	olive	+$50

Step 8. Lock Option

For lock (L)

KA	keyed alike, black	+$0
KQ	keyed alike, chrome	+$0
KD	keyed differently, black	+$0
KC	keyed differently, chrome	+$0

OE1 Mobile Storage Trolley, Dual HZ835.

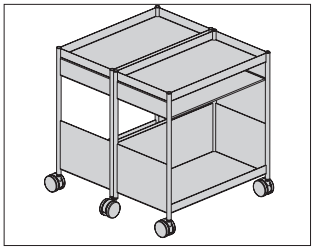

Product Information

Description

This dual OE1 Workspace Collection™ Mobile Storage Trolley is painted metal and comes on casters. It provides 3 configurations of a top shelf/ bottom shelf, top drawer/bottom shelf, or top drawer/bottom tip-out bin, mirrored on both sides. Options include a lock and file divider.

Notes

Configuration selection will be the same on both sides.

Drawer contains full-extension slides. Tip-out bin (DT) with filing (F) option accommodates front-to-back filing.

Divider color matches storage unit color.

Order optional accessories separately:

- OE1 storage liner (HZ840.)
- OE1 cushion top (HZ850.)
- OE1 bag hook (HZ870.)
- OE1 file divider add-on (HZ880.)
- OE1 storage organizer (HZ860.)

For keyed-alike locks, order lock plugs separately. See Keyed-Alike Information in appendices.

See planning guide for additional information.

Dimensions

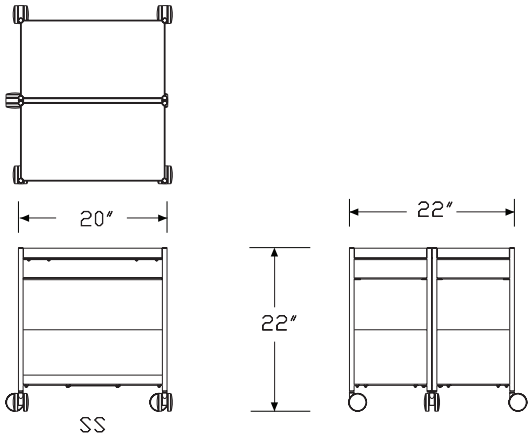

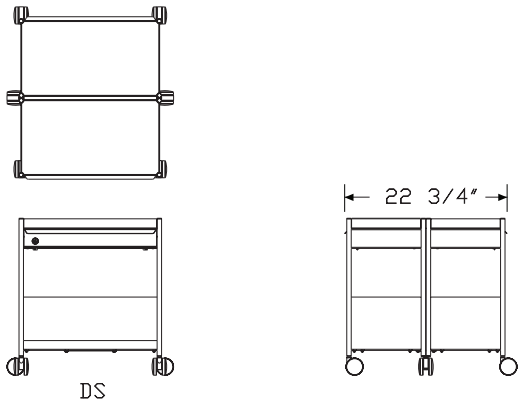

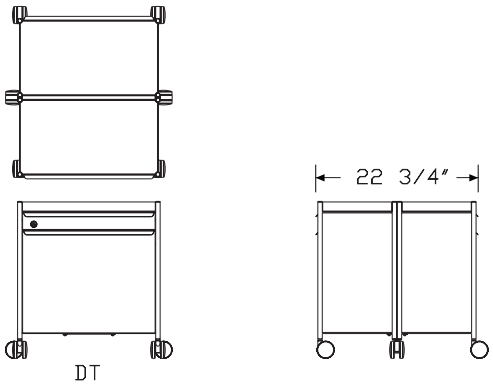

OE1 Mobile Storage Trolley, Dual

continued

Specification Information

Step 1.

HZ835.

Step 2. Width

20	20″ wide

Step 3. Depth

22	22″ deep

Step 4. Configuration

SS	top shelf/bottom shelf
DS	top drawer/bottom shelf
DT	top drawer/bottom tip-out bin

Step 5. Lock

For top shelf/bottom shelf (SS)

N	no lock

For top drawer/bottom shelf (DS) or top drawer/bottom tip-out bin (DT)

L	lock
N	no lock

Step 6. Interior Option

For top drawer/bottom tip-out bin (DT)

F	filing option
N	no interior option

For top shelf/bottom shelf (SS) or top drawer/bottom shelf (DS)

N	no interior option

Prices for Steps 1-6.

	SSNN	DSLN	DSNN	DTLF	DTLN	DTNF
HZ835. 20 22	$1835	2193	2045	3203	3030	3054

	DTNN
HZ835. 20 22	$2881

Step 7. Finish

Metallic Paint

611	beige mist metallic (CP)	+$0
613	silver (CP)	+$0
SNA	satin aluminum	+$60
SNB	satin bronze	+$60
SNC	satin carbon	+$60

Sand Texture Paint

UBK	ultra black (CP)	+$0
8Q	folkstone grey (CP)	+$0
91	white (CP)	+$0
98	studio white (CP)	+$0
BK	black	+$0
G1	graphite (CP)	+$0
WL	warm stone (CP)	+$0
DB3	glacier	+$50
DN2	nightfall	+$50
DR1	canyon	+$50
OLF	olive	+$50

Step 8. Lock Option

For lock (L)

KA	keyed alike, black	+$0
KQ	keyed alike, chrome	+$0
KD	keyed differently, black	+$0
KC	keyed differently, chrome	+$0

OE1 Storage Trolley, Liner HZ840.

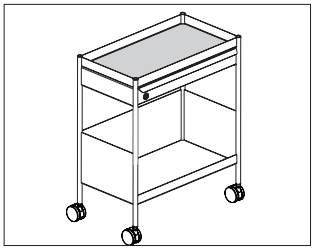

Product Information

Description

This polyester felt liner comes in 1 size and fits onto a storage trolley top, a top shelf, or bottom shelf. Liner is installed and movable without tools.

Notes

Liner ships as a quantity of 1.

To accommodate a liner on both sides of OE1 individual-extended (HZ825.), shared-extended (HZ830.), or dual (HZ835.) storage trolleys, 2 liners are needed.

Compatible with the following products:

- OE1 freestanding storage trolley, individual (HZ800.)
- OE1 mobile storage trolley, individual (HZ820.)
- OE1 mobile storage trolley, individual-extended (HZ825.)
- OE1 mobile storage trolley, shared-extended (HZ830.)
- OE1 mobile storage trolley, dual (HZ835.)

See planning guide for additional information.

Dimensions

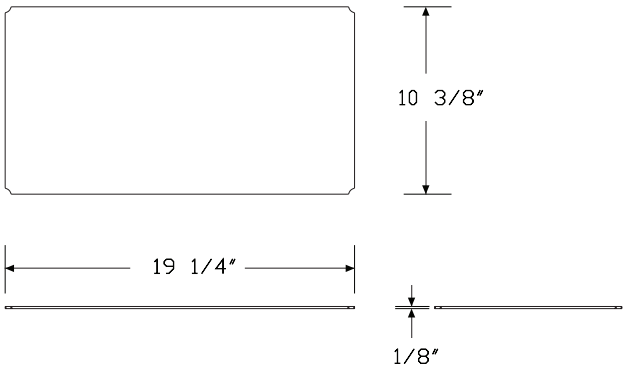

Specification Information

Step 1.

HZ840.

Step 2. Width

20 20″ wide

Step 3. Depth

11 11″ deep

Prices for Steps 1-3.

	11
HZ840. 20	$159

Step 4. Liner Fabric

Price Category 4	+$0

OE1 Storage Trolley, Cushion Top HZ850.

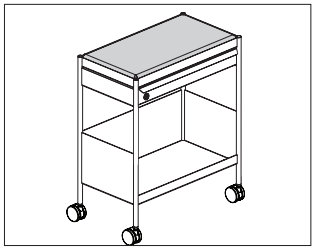

Product Information

Description

This 2″ fabric cushion top comes in 1 size and fits onto an OE1 Workspace Collection™ Storage Trolley top.

Notes

Cushion top ships as a quantity of 1.

To accommodate a cushion top on both sides of OE1 individual-extended (HZ825.), shared-extended (HZ830.), or dual (HZ835.) storage trolleys, 2 cushion tops are needed.

Compatible with the following products:

- OE1 freestanding storage trolley, individual (HZ800.)
- OE1 mobile storage trolley, individual (HZ820.)
- OE1 mobile storage trolley, individual-extended (HZ825.)
- OE1 mobile storage trolley, shared-extended (HZ830.)
- OE1 mobile storage trolley, dual (HZ835.)

Cushion top accepts Customer's Own Material (COM). COM requires 1 yard.

See planning guide for additional information.

Dimensions

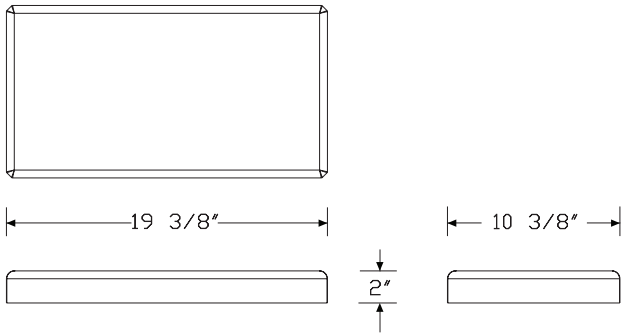

Specification Information

Step 1.

HZ850.

Step 2. Width

20 20″ wide

Step 3. Depth

11 11″ deep

Prices for Steps 1-3.

	11
HZ850. 20	$290

Step 4. Fabric

Price Category 10	+$1945
Price Category 1	+$0
Price Category 2	+$77
Price Category 3	+$108
Price Category 4	+$143
Price Category 5	+$185
Price Category 7	+$259
Price Category 9	+$1721
Price Category B	+$53
Price Category C	+$72
Price Category D	+$92
Price Category E	+$110
Price Category F	+$143
Price Category G	+$186
Price Category H	+$226
Price Category I	+$265
Price Category L	+$384
Price Category X	+$845
Price Category Y	+$888

OE1 Storage Trolley, Organizer HZ860.

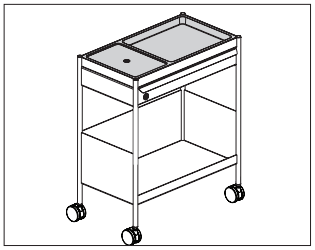

Product Information

Description

This molded plastic organizer comes in 1 size and fits onto an OE1 Workspace Collection™ Storage Trolley top.

Notes

Organizer ships as a quantity of 1.

Compatible with the following products:

- OE1 freestanding storage trolley, individual (HZ800.)
- OE1 mobile storage trolley, individual (HZ820.)
- OE1 mobile storage trolley, individual-extended (HZ825.)
- OE1 mobile storage trolley, shared-extended (HZ830.)
- OE1 mobile storage trolley, dual (HZ835.)

See planning guide for additional information.

Dimensions

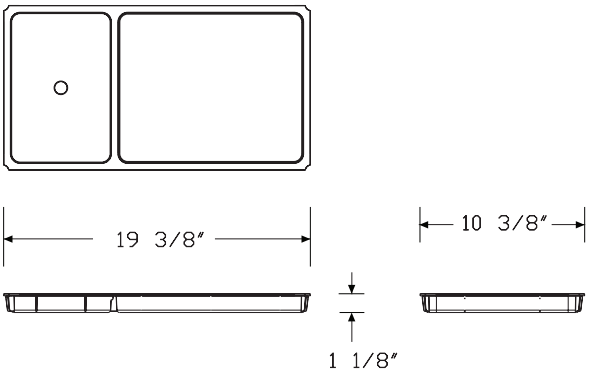

Specification Information

Step 1.

HZ860.

Step 2. Width

20	20″ wide

Step 3. Depth

11	11″ deep

Prices for Steps 1-3.

		11
HZ860.	**20**	$201

Step 4. Organizer Finish

8Q	folkstone grey (CP)	+$0
BK	black	+$0
UBK	ultra black (CP)	+$0

OE1 Storage Trolley, Bag Hook HZ870.

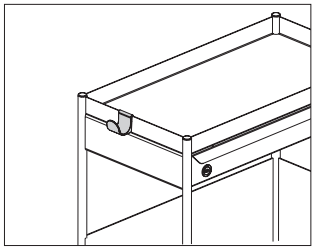

Product Information

Description

This plastic bag hook attaches to the top of an OE1 Workspace Collection™ Storage Trolley without the use of tools.

Notes

Bag hook ships as a quantity of 1.

Bag hook holds up to 35 pounds.

Compatible with the following products:

- OE1 freestanding storage trolley, individual (HZ800.)
- OE1 mobile storage trolley, individual (HZ820.)
- OE1 mobile storage trolley, individual-extended (HZ825.)
- OE1 mobile storage trolley, shared-extended (HZ830.)
- OE1 mobile storage trolley, dual (HZ835.)

See planning guide for additional information.

Dimensions

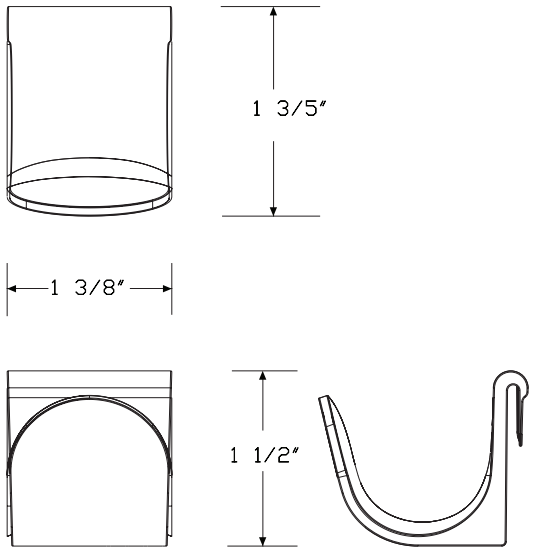

Specification Information

Step 1.

HZ870.	$20

Step 2. Finish

8Q	folkstone grey (CP)	+$0
91	white (CP)	+$0
98	studio white (CP)	+$0
BK	black	+$0
DB3	glacier	+$10
DN2	nightfall	+$10
DR1	canyon	+$10
OLF	olive	+$10
UBK	ultra black (CP)	+$0

OE1 Storage Trolley, File Divider Add-On HZ880.

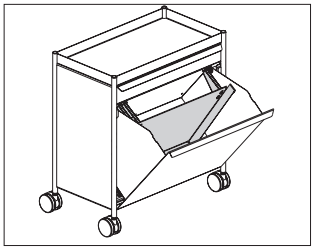

Product Information

Description

This painted metal file divider add-on is for use within a top drawer/bottom tip-out bin configuration in an OE1 Workspace Collection™ Storage Trolley. It can be added to the product at any time.

Notes

File divider add-on ships as a quantity of 1.

Compatible with the following products:

- OE1 freestanding storage trolley, individual (HZ800.)
- OE1 mobile storage trolley, individual (HZ820.)
- OE1 mobile storage trolley, individual-extended (HZ825.)
- OE1 mobile storage trolley, shared-extended (HZ830.)
- OE1 mobile storage trolley, dual (HZ835.)

See planning guide for additional information.

Dimensions

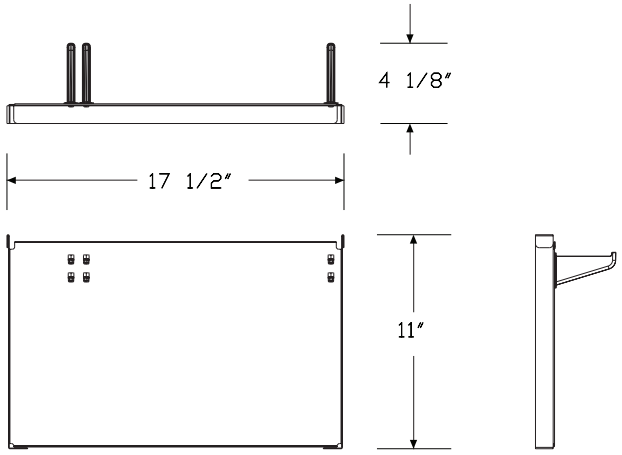

Specification Information

Step 1.

HZ880.	$108

Step 2. Finish

Metallic Paint		
611	beige mist metallic (CP)	+$0
613	silver (CP)	+$0
SNA	satin aluminum	+$10
SNB	satin bronze	+$10
SNC	satin carbon	+$10

Sand Texture Paint		
UBK	ultra black (CP)	+$0
8Q	folkstone grey (CP)	+$0
91	white (CP)	+$0
98	studio white (CP)	+$0
BK	black	+$0
G1	graphite (CP)	+$0
WL	warm stone (CP)	+$0
DB3	glacier	+$8
DN2	nightfall	+$8
DR1	canyon	+$8
OLF	olive	+$8

OE1 Workbox Y7236.

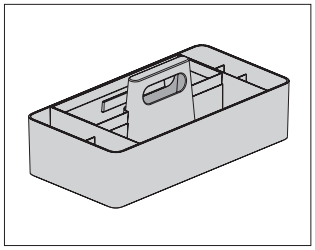

Product Information

Description

This molded plastic workbox comes in 1 size and fits onto an OE1 Storage Trolley.

Notes

Order OE1 storage trolley (HZ800., HZ82x., HZ83x.) separately.

Dimensions

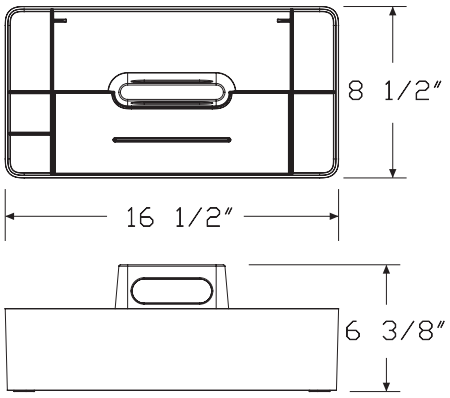

Specification Information

Step 1.

Y7236.

Step 2. Width

17	17″ wide

Step 3. Depth

09	9″ deep

Prices for Steps 1-3.

		09
Y7236.	**17**	$246

Step 4. Workbox Finish

8Q	folkstone grey (CP)	+$0
DB3	glacier	+$0
DN3	nightfall lt	+$0

OE1 Freestanding Curtain - Straight HZ600.

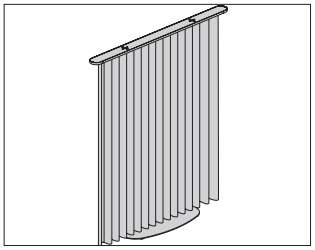

Product Information

Description

This freestanding fabric curtain hangs on a frame. Non-friction adhesive pads on bottom of frame base provide for mobility.

Notes

Fabrics in price categories 2 and 5 have a seam.

All fabrics for this curtain meet NFPA 701 flame retardancy standards.

See planning guide for additional information.

Dimensions

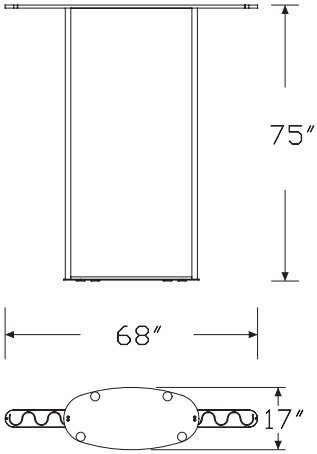

Specification Information

Step 1.

HZ600.

Step 2. Height

75	75″ high

Step 3. Width

68	68″ wide

Prices for Steps 1-3.

	68
HZ600. 75	$2915

Step 4. Frame/Base Finish

Sand Texture Paint

8Q	folkstone grey (CP)	+$0
91	white (CP)	+$0
98	studio white (CP)	+$0
BK	black	+$0
DB3	glacier	+$8
DN2	nightfall	+$8
DR1	canyon	+$8
OLF	olive	+$8
UBK	ultra black (CP)	+$0

Step 5. Fabric

Price Category 2	+$0
Price Category 5	+$297
Price Category 8	+$346

OE1 Freestanding Curtain - Curved HZ610.

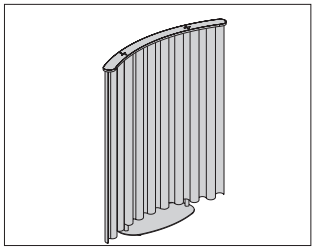

Product Information

Description

This freestanding curved fabric curtain hangs on a frame. Non-friction adhesive pads on bottom of frame base provide for mobility.

Notes

Fabrics in price categories 2 and 5 have a seam.

All fabrics for this curtain meet NFPA 701 flame retardancy standards.

See planning guide for additional information.

Dimensions

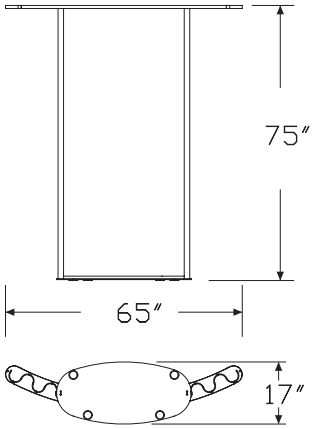

Specification Information

Step 1.

HZ610.

Step 2. Height

75	75″ high

Step 3. Width

68	68″ wide

Prices for Steps 1-3.

	68
HZ610. 75	$3270

Step 4. Frame/Base Finish

Sand Texture Paint		
8Q	folkstone grey (CP)	+$0
91	white (CP)	+$0
98	studio white (CP)	+$0
BK	black	+$0
DB3	glacier	+$8
DN2	nightfall	+$8
DR1	canyon	+$8
OLF	olive	+$8
UBK	ultra black (CP)	+$0

Step 5. Fabric

Price Category 2	+$0
Price Category 5	+$297
Price Category 8	+$346

OE1 Curved Screen HZ620.

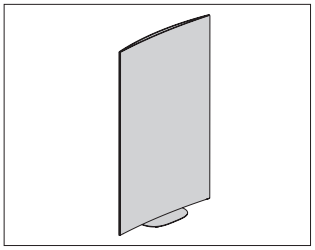

Product Information

Description

This screen is a user-movable, fabric-covered concave boundary screen. Fabrics must be specified for each side of the screen. Base plate has non-friction glides for mobility.

Notes

For tackable fabric, fabric direction is horizontal (railroaded).

Fabric-covered screen accepts Customer's Own Material (COM).

Width (surface material)—Yardage

48—2.44 yards per side

For information on multiple quantities or non-directional fabrics, contact COM Department. See Order Information in appendices.

See planning guide for additional information.

Dimensions

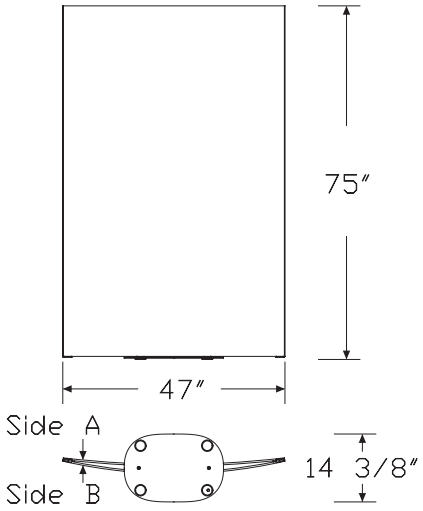

Specification Information

Step 1.

HZ620.

Step 2. Height

75	75″ high

Step 3. Width

48	48″ wide

Prices for Steps 1-3.

	48
HZ620. 75	$2158

Step 4. Frame/Base Finish

Sand Texture Paint		
8Q	folkstone grey (CP)	+$0
91	white (CP)	+$0
98	studio white (CP)	+$0
BK	black	+$0
DB3	glacier	+$0
DN2	nightfall	+$0
DR1	canyon	+$0
OLF	olive	+$0
UBK	ultra black (CP)	+$0

Step 5. Fabric - Side A

Price Category 1	+$0
Price Category 2	+$22
Price Category 3	+$46
Price Category 4	+$86
Price Category 5	+$140
Price Category C	+$177

Step 6. Fabric - Side B

Price Category 1	+$0
Price Category 2	+$22
Price Category 3	+$46
Price Category 4	+$86
Price Category 5	+$140
Price Category C	+$177

OE1 Powerbox HZ630.

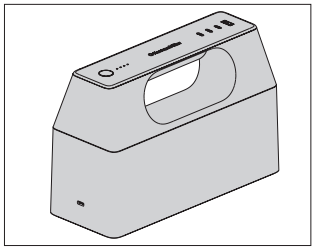

Product Information

Description

This unit is a battery-powered plastic molded power source with 3 USB-C ports and 1 USB-A port. The Powerbox can be charged using a charging cable kit or the separate OE1 Power Tray.

Notes

Powerbox pairs with OE1 power tray (HZ640.) to charge 1 or more units.

For the no-charging-cable option (NN), the OE1 power tray (HZ640.) must be ordered separately for charging.

See planning guide for additional information.

Dimensions

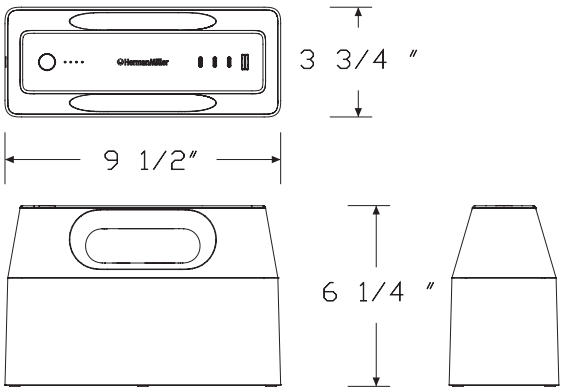

Specification Information

Step 1.

HZ630. A

Step 2. Width

04	04″ wide A	

Step 3. Depth

10	10″ deep A	

Prices for Steps 1-3.

		10
HZ630. 04		$1643

Step 4. Charging Option

NN	no charging cable A	+$0
CC	charging cable kit A	+$127

Step 5. Finish

BK	black A	+$0
UBK	ultra black (CP) A	+$0

OE1 Power Tray HZ640.

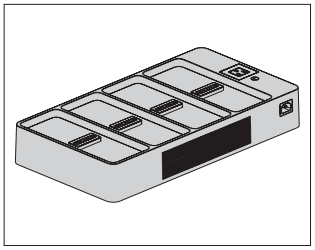

Product Information

Description

This charging unit is a molded plastic tray capable of charging up to 4 OE1 Powerboxes. It also has 1 AC outlet to provide 120 VAC/60 Hz power from the batteries. Tray comes with the infeed cable to connect tray to a power source. Power tray fits onto an OE1 Storage Trolley.

Notes

Power tray pairs with up to 4 OE1 powerboxes (HZ630.), ordered separately.

Order OE1 storage trolley (HZ800., HZ82x., HZ83x.) separately.

See planning guide for additional information.

Dimensions

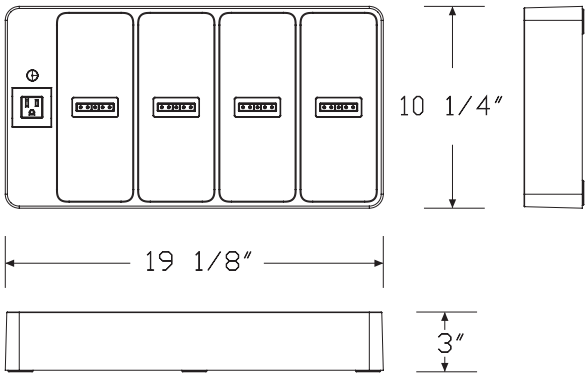

Specification Information

Step 1.

HZ640. A

Step 2. Width

20	20″ wide A	

Step 3. Depth

11	11″ deep A	

Prices for Steps 1-3.

		11
HZ640.	**20**	$2158

Step 4. Power Tray Finish

BK	black A	+$0
UBK	ultra black (CP) A	+$0

OE1 Personal Hoodie, Single Pack Y1148.

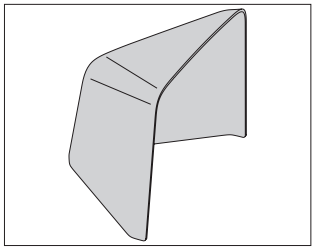

Product Information

Description

This screen is a molded PET personal boundary. Package quantity is 1.

Notes

See planning guide for additional information.

Dimensions

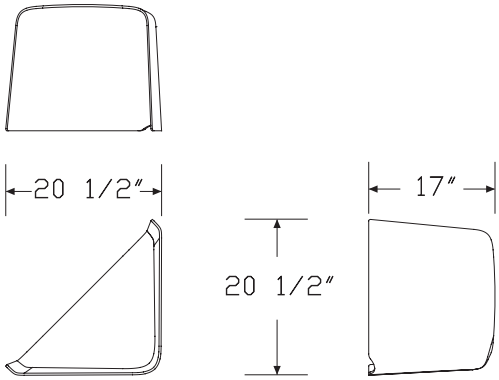

Specification Information

Step 1.

Y1148.1

Step 2. Height

17 17″ high

Step 3. Width

27 27″ wide

Prices for Steps 1-3.

		27
Y1148.1	**17**	$468

Step 4. Finish

PHA	heathered alpine	+$0
PHT	heathered twlight	+$0

OE1 Personal Hoodie, Six Pack Y1148.

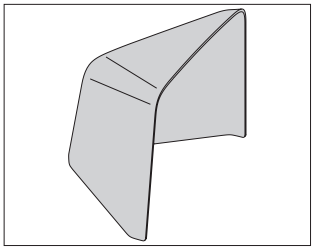

Product Information

Description

This screen is a molded PET personal boundary. Package quantity is 6.

Notes

See planning guide for additional information.

Dimensions

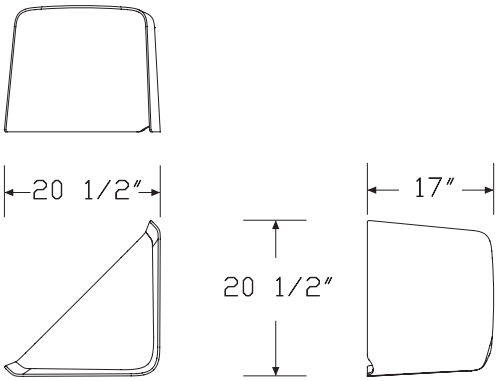

Specification Information

Step 1.

Y1148.6

Step 2. Height

17	17″ high

Step 3. Width

27	27″ wide

Prices for Steps 1-3.

		27
Y1148.6	**17**	$2184

Step 4. Finish

PHA	heathered alpine	+$0
PHT	heathered twlight	+$0

OE1 Bag Hook, Leg Attached HZ910.

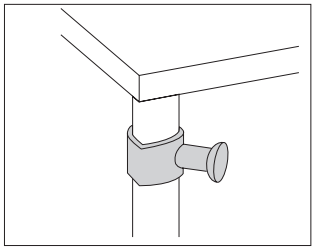

Product Information

Description

This bag hook attaches to an OE1 Workspace Collection™ Teardrop Leg and is intended to hold bags under the work surface. Bag hook is user movable and works on all OE1 teardrop legs.

Dimensions

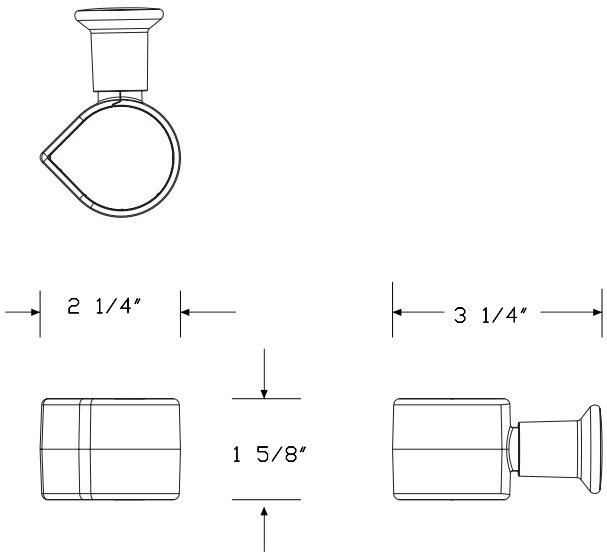

Specification Information

Step 1.

HZ910.	$40

Step 2. Finish

8Q	folkstone grey (CP)	+$0
BK	black	+$0
DB3	glacier	+$10
DN2	nightfall	+$10
DR1	canyon	+$10
OLF	olive	+$10
UBK	ultra black (CP)	+$0

OE1 Flip Chart Hook, Pair HZ920.

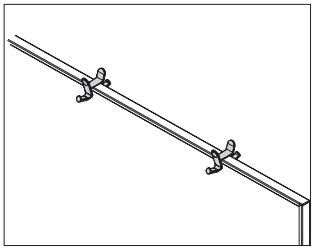

Product Information

Description

These molded plastic flip chart hooks attach to the OE1 Workspace Collection™ Project Board to hold flip chart paper. Paper not included. Package contains 2 separate hooks.

Notes

Flip chart hook pair ships with 2 hooks.

Use with OE1 project board (HZ210.), ordered separately.

See planning guide for additional information.

Dimensions

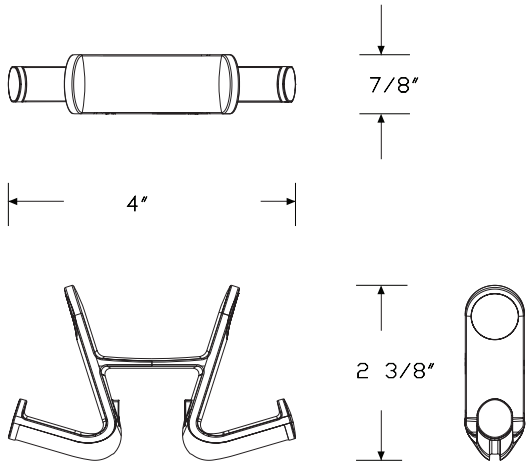

Specification Information

Step 1.

HZ920.	$47

Step 2. Finish

UBK	ultra black (CP)	+$0
98	studio white (CP)	+$0
8Q	folkstone grey (CP)	+$0
BK	black	+$0

OE1 Marker Cup Y7235.

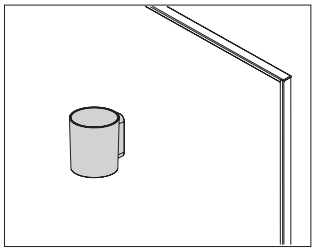

Product Information

Description

This marker cup comes with 1 cup-style holder, 4 dry erase markers (1 each of black, red, blue, and green), and 1 microfiber towel. The cup attaches to a vertical, hard surface with suction cups or can sit flat on a worksurface.

Dimensions

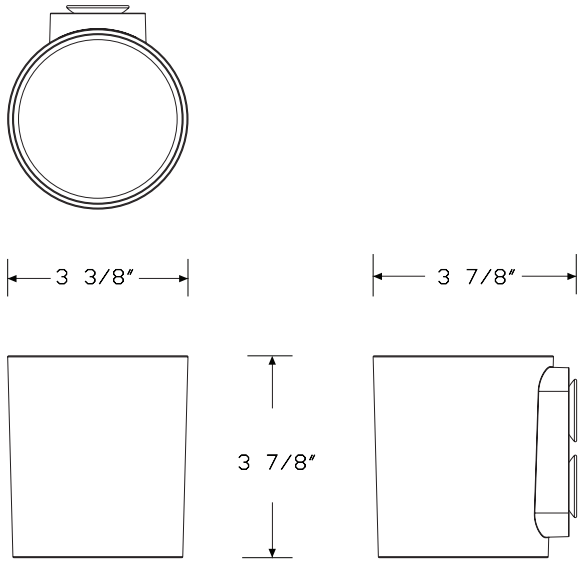

Specification Information

Step 1.

Y7235.	$125

Step 2. Finish

8Q	folkstone grey (CP)	+$0
BK	black	+$0
DB3	glacier	+$5
DN2	nightfall	+$5
DR1	canyon	+$5
OLF	olive	+$5
UBK	ultra black (CP)	+$0

Index by Product Name

OE1 Workspace Collection™	
OE1 Accessory Bridge	page(s) 83
OE1 Agile Wall, Bottom Shelves	16
OE1 Agile Wall Corner Cover	25
OE1 Agile Wall, Frame with Casters	5
OE1 Agile Wall, Frame with Glides	7
OE1 Agile Wall, Frame with Glides, for Full Height Shelves	9
OE1 Agile Wall, Full Height Shelves	18
OE1 Agile Wall, Lower Tile	13
OE1 Agile Wall, Monitor Mount	20
OE1 Agile Wall, Upper Tile	10
OE1 Bag Hook, Leg Attached	151
OE1 Bridge Connector	85
OE1 Bridge Mounted Screen, Flat Edge	95
OE1 Bridge Mounted Screen, Laminate	100
OE1 Bridge Mounted Screen, Pari	98
OE1 Communal Table Flat Edge Screen, Surface Attached with Modesty	60
OE1 Communal Table Metal Screen, Surface Attached with Modesty	58
OE1 Communal Table Pari Screen, Surface Attached with Modesty	62
OE1 Controlled Receptacle, 4-Circuit, 15 Amp (Package of 4)	116
OE1 Controlled Receptacle, 20 Amp	118
OE1 Curved Screen	146
OE1 End Caps for Accessory Bridge 2/Pkg	84
OE1 Flip Chart Hook, Pair	152
OE1 Freestanding Curtain - Curved	145
OE1 Freestanding Curtain - Straight	144
OE1 Freestanding Storage Trolley, Individual	127
OE1 Ganging Connector	94
OE1 Huddle Table	107
OE1 Leg Cable Manager for Communal Tables	67
OE1 Leg Cable Manager for Seated Height Tables	93
OE1 Marker Cup	153
OE1 Metal Boundary Screen	126
OE1 Micro Pack, 3-Pack	36
OE1 Micro Pack, 4-Pack	39
OE1 Micro Pack Center Screen, 4-Pack, Flat Edge	45
OE1 Micro Pack Center Screen, 4-Pack, Laminate	47
OE1 Micro Pack Center Screen, 4-Pack, Pari	46
OE1 Micro Pack Privacy Screen, 3-Pack	43
OE1 Micro Pack Privacy Screen, Single/4-Pack	42
OE1 Micro Pack Screen Liner	44
OE1 Micro Pack, Single	33
OE1 Mobile Easel Base	22
OE1 Mobile Storage Trolley, Dual	136
OE1 Mobile Storage Trolley, Individual	129
OE1 Mobile Storage Trolley, Individual-Extended	131
OE1 Mobile Storage Trolley, Shared-Extended	134
OE1 Movable Screen, Flat Edge	123
OE1 Movable Screen, Pari	119
OE1 Nook	102
OE1 Nook Liner	105
OE1 One-Piece Seated Communal Table, Single Sided	52
OE1 One-Piece Standing Communal Table, Double Sided	64
OE1 One-Piece Standing Communal Table, Single Sided	49
OE1 Personal Hoodie, Single Pack	149
OE1 Personal Hoodie, Six Pack	150
OE1 Powerbox	147
OE1 Power Entry Cover	112
OE1 Power Entry, Internal Direct Connect	110
OE1 Power Entry, New York	111
OE1 Power Harness	113
OE1 Power Jumper	114
OE1 Power Tray	148
OE1 Project Board	23
OE1 Project Table	89
OE1 Receptacle, 4-Circuit, 15 Amp (Package of 4)	115
OE1 Receptacle, 20 Amp	117
OE1 Rectangular Table	80
OE1 Sit-to-Stand Table, Rectangular Round Corner	30
OE1 Sit-to-Stand Table, Rectangular Square Corner	26
OE1 Sit-to-Stand Table, Round	28
OE1 Sit-to-Stand Table USB C Power Module	32
OE1 Stiffener	79
OE1 Storage Trolley, Bag Hook	141
OE1 Storage Trolley, Cushion Top	139
OE1 Storage Trolley, File Divider Add-On	142
OE1 Storage Trolley, Liner	138
OE1 Storage Trolley, Organizer	140
OE1 Teardrop Leg	75
OE1 Three-Piece Standing Communal Table, Double Sided	68
OE1 Two-Piece Standing Communal Table, Double Sided	72
OE1 Two-Piece Standing Communal Table, Single Sided	55
OE1 Wall Rail Kit	24
OE1 Workbox	143
OE1 Worksurface, Project Table	86
OE1 Worksurface, Rectangle	76

Index by Product Number

HZ100.	OE1 Agile Wall, Frame with Casters	page(s) 5
HZ110.	OE1 Agile Wall, Frame with Glides	7
HZ120.	OE1 Agile Wall, Frame with Glides, for Full Height Shelves	9
HZ130.	OE1 Agile Wall, Upper Tile	10
HZ140.	OE1 Agile Wall, Lower Tile	13
HZ150.	OE1 Agile Wall, Bottom Shelves	16
HZ160.	OE1 Agile Wall, Full Height Shelves	18
HZ170.	OE1 Agile Wall, Monitor Mount	20
HZ200.	OE1 Mobile Easel Base	22
HZ210.	OE1 Project Board	23
HZ220.	OE1 Wall Rail Kit	24
HZ230.	OE1 Agile Wall Corner Cover	25
HZ270S	OE1 Sit-to-Stand Table, Rectangular Square Corner	26
HZ275S	OE1 Sit-to-Stand Table, Round	28
HZ280S	OE1 Sit-to-Stand Table, Rectangular Round Corner	30
HZ285.	OE1 Sit-to-Stand Table USB C Power Module	32
HZ300S	OE1 Micro Pack, Single	33
HZ310S	OE1 Micro Pack, 3-Pack	36
HZ320S	OE1 Micro Pack, 4-Pack	39
HZ330.	OE1 Micro Pack Privacy Screen, Single/4-Pack	42
HZ340.	OE1 Micro Pack Privacy Screen, 3-Pack	43
HZ350.	OE1 Micro Pack Screen Liner	44
HZ360.	OE1 Micro Pack Center Screen, 4-Pack, Flat Edge	45
HZ370.	OE1 Micro Pack Center Screen, 4-Pack, Pari	46
HZ380.	OE1 Micro Pack Center Screen, 4-Pack, Laminate	47
HZ400S	OE1 One-Piece Standing Communal Table, Single Sided	49
HZ405S	OE1 One-Piece Seated Communal Table, Single Sided	52
HZ410S	OE1 Two-Piece Standing Communal Table, Single Sided	55
HZ420.	OE1 Communal Table Metal Screen, Surface Attached with Modesty	58
HZ430.	OE1 Communal Table Flat Edge Screen, Surface Attached with Modesty	60
HZ440.	OE1 Communal Table Pari Screen, Surface Attached with Modesty	62
HZ450S	OE1 One-Piece Standing Communal Table, Double Sided	64
HZ460S	OE1 Two-Piece Standing Communal Table, Double Sided	72
HZ470S	OE1 Three-Piece Standing Communal Table, Double Sided	68
HZ480.	OE1 Leg Cable Manager for Communal Tables	67
HZ500.	OE1 Teardrop Leg	75
HZ505S	OE1 Worksurface, Rectangle	76
HZ510.	OE1 Stiffener	79
HZ515S	OE1 Rectangular Table	80
HZ520.	OE1 Accessory Bridge	83
HZ525.	OE1 End Caps for Accessory Bridge 2/Pkg	84
HZ530.	OE1 Bridge Connector	85
HZ535.	OE1 Bridge Mounted Screen, Flat Edge	95
HZ540.	OE1 Bridge Mounted Screen, Pari	98
HZ545.	OE1 Bridge Mounted Screen, Laminate	100
HZ550S	OE1 Worksurface, Project Table	86
HZ555S	OE1 Project Table	89
HZ560.	OE1 Leg Cable Manager for Seated Height Tables	93
HZ565.	OE1 Ganging Connector	94
HZ570S	OE1 Nook	102
HZ575.	OE1 Nook Liner	105
HZ580S	OE1 Huddle Table	107
HZ600.	OE1 Freestanding Curtain - Straight	144
HZ610.	OE1 Freestanding Curtain - Curved	145
HZ620.	OE1 Curved Screen	146
HZ630.	OE1 Powerbox	147
HZ640.	OE1 Power Tray	148
HZ700.	OE1 Power Entry, Internal Direct Connect	110
HZ710.	OE1 Power Entry, New York	111
HZ720.	OE1 Power Entry Cover	112
HZ730.	OE1 Power Harness	113
HZ740.	OE1 Power Jumper	114
HZ750.	OE1 Receptacle, 4-Circuit, 15 Amp (Package of 4)	115
HZ760.	OE1 Controlled Receptacle, 4-Circuit, 15 Amp (Package of 4)	116
HZ770.	OE1 Receptacle, 20 Amp	117
HZ780.	OE1 Controlled Receptacle, 20 Amp	118
HZ800.	OE1 Freestanding Storage Trolley, Individual	127
HZ820.	OE1 Mobile Storage Trolley, Individual	129
HZ825.	OE1 Mobile Storage Trolley, Individual-Extended	131
HZ830.	OE1 Mobile Storage Trolley, Shared-Extended	134
HZ835.	OE1 Mobile Storage Trolley, Dual	136
HZ840.	OE1 Storage Trolley, Liner	138
HZ850.	OE1 Storage Trolley, Cushion Top	139
HZ860.	OE1 Storage Trolley, Organizer	140
HZ870.	OE1 Storage Trolley, Bag Hook	141
HZ880.	OE1 Storage Trolley, File Divider Add-On	142
HZ910.	OE1 Bag Hook, Leg Attached	151
HZ920.	OE1 Flip Chart Hook, Pair	152
Y1141.	OE1 Movable Screen, Pari	119
Y1142.	OE1 Movable Screen, Flat Edge	123
Y1143.	OE1 Metal Boundary Screen	126
Y1148.	OE1 Personal Hoodie, Single Pack	149
Y1148.	OE1 Personal Hoodie, Six Pack	150
Y7235.	OE1 Marker Cup	153
Y7236.	OE1 Workbox	143

20-Day or Less/Assigned Lead-Time Order Information

20-Day or Less and Assigned Lead-Time Programs

20-day or less and assigned lead-time products are designed for established Herman Miller dealers with pre-approved credit.

Products are distributed from multiple manufacturing facilities across the United States. All products and options not designated by an Assigned Lead-Time icon A will ship in 20 business days or less after being acknowledged by Herman Miller. Products and options designated by an A are on the assigned lead-time program and will ship in 20 days, less than 20 days, or more than 20 days from order acknowledgement.

Ordering Procedure

Please place orders through Order Manager. If this is not available to you, place orders through mail or fax. Verbal purchase orders will not be accepted.

Order Entry fax number for Meridian®
Filing and Storage: (616) 846 9236.
Order Entry fax number for all other products:
(616) 654 3085.

For more information, contact your Customer Care representative at: (866) 854 3048 ext 3400.

Shipments and Delivery

Per Herman Miller Terms and Conditions.

Changes and Cancellation

Per Herman Miller Terms and Conditions.

Keyed-Alike Locks

All components with locks may be specified keyed alike. Products with keyed-alike locks will be shipped with lock chassis installed. Installation of lock cylinders will be on-site according to instructions provided. Herman Miller, Inc., will not be responsible for lock cylinder installation.

When specifying product keyed-alike, include separate lines on your order for the lock cylinders.

For Action Office®, Ethospace®, and Supplemental products, list cylinder part number and key number (232092-XXX); select a key number (or numbers) between 226 and 427, excluding numbers 408 and 412.

The following products require a different lock cylinder part number Specify UKY001-XXX for these products only; select a key number (or numbers) between 226 and 427, excluding numbers 408 and 412.

A3013.
A3053.
G5180.
G5181.
G5280.

The keys provided in 232092-XXX and UKY001-XXX kits work with either cylinder type, provided the key numbers match.

For Tu® Storage, Canvas Office Landscape®, and Meridian® Storage, see the following charts.

Keyed-alike locks are field installed.

To order keyed-alike locks for Action Office® Series 1 and 2 door panels, please contact Customer Care.

A master key can be used to open any lock on an attached or freestanding component. In addition, a removal key or lock change tool is required to remove lock plugs. Customers interested in ordering master keys, removal keys, or lock change tools should contact Customer Care.

For Canvas overhead and lower storage units, specify as follows:

Specification Code	Part Number	Color	Lock Series
KA	1B2JK7-XXX[1]	chrome	UM series 226-427

For Canvas Metal Storage, Meridian Storage, and Tu Storage, specify as follows:

Specification Code	Key Number	Color	Lock Series
KA	232092-XXX[1]	black	UM series 226-427
KA	1B2JK7-XXX[1]	chrome	UM series 226-427

For Canvas Metal Desk overhead units, specify as follows:

Specification Code	Key Number	Color	Lock Series
KA	232092-XXX[1]	black	UM series 226-427
KC	1B2JK7-XXX[1]	chrome	UM series 226-427

Key Number:
XXX[1] = a key number between 226 and 427 (excluding 408 and 412)

Customer's Own Material Order Information — Workspaces

Customer's Own Material

Program Overview

The Customer's Own Material (COM) program gives you the option of using textiles other than those listed. Herman Miller will test textiles for application to Herman Miller products and will process orders for those with approved COM textiles only. COM textiles are on assigned lead times.

Omni lists an overview of fabrics that have been tested and indicates whether or not they were approved for application to Herman Miller products.

Specific information on the terms and conditions, testing, approval, and ordering process for COM is listed below. Questions about the COM program and requests for assistance may be directed to your COM representative at:
(616) 654 3400
(866) 854 3048 ext 6543400

Customer's Own Material Warranty

Herman Miller does not warrant COM textiles. COM textiles are tested for application only; they are not tested for performance. The Herman Miller warranty does apply to the underlying products.

Suppliers of COM textiles are responsible for color consistency within commercial tolerances, UV stability, and resistance to soiling and perspiration.

Customer's Own Material Pricing

COM is a Category 1 fabric. There are no application charges for COM fabrics.

Ordering and payment for COM textile yardage are the responsibility of the customer and the textile supplier.

If desired, Herman Miller will purchase COM textiles directly from Maharam, Camira, C.F. Stinson, Guilford of Maine, Luna Textiles, Momentum Textiles and Ultrafabrics to simplify ordering and shipment. For this service, refer to the Supplier Connection program in Omni.

Application Note

Herman Miller does not guarantee that Customer's Own Material (COM) fabric patterns will align across panels/tiles or from one screen to the next. We also do not guarantee that COM fabric designs will be positioned consistently in the same location across several panels, tiles, or screens.

Textile Approval

1. Select a COM textile and a Herman Miller product.
2. If your textile does not show as tested in Omni, submit a request. You will be required to select a specific color of the textile and feature of the product to test, i.e., seat, back, etc.
3. Herman Miller will notify you of approval or disapproval within 4 days from receipt of the test yardage.

Ordering Products with COM

1. Refer to the specific products to determine the yardage required for COM textiles.
   Note: Yardage requirements are based on nondirectional, 54"-wide textiles. 66"-wide textiles are needed for application on 60"-wide products. Additional yardage may be needed due to the unique characteristics of a textile.
2. Obtain the COM ID# in Omni. If the color you are ordering does not have a COM ID# assigned, click "Create ID".
3. Enter your order on Order Manager in Omni.
4. Upon receipt of your purchase order, Herman Miller will send you a PO acknowledgment.
5. Arrangements must be made for the textiles to be shipped from the supplier to Herman Miller for application to the Herman Miller products. Textiles must be tagged with the assigned identification number and the roll yardage quantity. See Omni for shipping procedures and current shipping addresses or contact a COM representative at (616) 654 3400 or (866) 854 3048 ext 6543400.

   Products will be scheduled for production when COM textiles are received at Herman Miller. Standard lead times in effect at that time will apply.

   Note: If textiles are to be purchased directly by Herman Miller through the Supplier Connection program, Herman Miller will handle the ordering and shipping process and will schedule your order for production upon receipt of your purchase order (dependent on textile availability). Refer to the Supplier Connection program for more information.

Supplier Connection

Program Overview

The Supplier Connection program is a service offered by Herman Miller to purchase approved COM textiles directly from Maharam, Camira, C.F. Stinson, Guilford of Maine, Luna Textiles, Momentum Textiles and Ultrafabrics. When you select a textile through this program, Herman Miller will facilitate the ordering, scheduling, and shipment of the textile directly with the supplier.

Suppliers included in the Supplier Connection program keep an active inventory of textiles that are pre-approved for application to Herman Miller products. Pre-approval applies only to the suitability of a textile for manufacturing and application to a Herman Miller product. Omni provides an overview of fabrics that have been tested and indicates whether or not they were approved for application to Herman Miller products.

Specific information on the terms and conditions, testing, approval, and ordering process for the Supplier Connection program is listed below. Questions and requests for assistance may be directed to your COM representative at:
(616) 654 3400
(866) 854 3048 ext 6543400

Supplier Connection Warranty

Textiles purchased by Herman Miller through the Supplier Connection program are COM and are not warranted by Herman Miller. COM textiles are tested for application only; they are not tested for performance. The Herman Miller warranty does apply to the underlying products.

Suppliers of COM textiles are responsible for color consistency within commercial tolerances, UV stability, and resistance to soiling and perspiration.

Supplier Connection Pricing

Textiles purchased by Herman Miller through the Supplier Connection program are COM. COM is a Category 1 fabric. There are no application charges for COM fabrics.

Payment for textiles purchased by Herman Miller through the Supplier Connection program is the responsibility of the customer or dealer. Herman Miller will invoice the order at a total product cost based on the supplier's price published at the time of the order.

Textile Approval

1. Select a COM textile and a Herman Miller product.
2. If your textile does not show as tested in Omni, submit a request. You will be required to select a specific color of the textile and feature of the product to test, i.e., seat, back, etc.
3. Herman Miller will notify you of approval or disapproval within 4 days from receipt of the test yardage.

Ordering Products with Supplier Connection COM

1. Identify and include the following information on your purchase order:
   - Product number and option
   - Herman Miller's COM identification number
2. Enter your order on Order Manager in Omni.
3. Upon receipt of the purchase order, Herman Miller will process your order and send you a PO acknowledgment. Herman Miller will determine the yardage required to produce your product and will order and schedule for delivery the required textile. Standard lead times in effect at the time the textile is allocated at the supplier will apply to products ordered through this program.

Textiles Application Chart — Workspaces

• *Available*

A *Assigned lead-time textile.*

A *Maharam textiles are on assigned lead times.*

See page 2 for exception notes.

		Action Office® Panels/Connectors	Action Office B-Style Tackboards	Action Office/Ethospace E-Style Storage	Ethospace Tiles/Connectors	Ethospace/Canvas Office Landscape® Privacy Doors	Canvas Tiles/Extended Width Tiles/Channel Tiles	Canvas B-/E-Style Storage	Canvas Tackboards	Canvas Metal Desk Hutch Back Panel	Canvas Vista™ Movable Insert and Display Unit	OE1 Boundary Agile Wall Tile	OE1 Boundary Project Board and Screens	OE1 Floating Screen	OE1 Nook Liner/Felt Screen Liner/Storage Trolley Liner	Overlay™ Performance Wall Cladding	Pari™ Screens/Flat Edge Screens/Channel Screens	Passport Work Table Screen	Renew™ Link Screens	Ambit™ Workspace Solutions Screen	Ambit Workspace Solutions Metal Screen Liner	Exclave® Tackable Boards and Stowage Tackable Backdrop	Exclave Video-Friendly Tackable Boards & Stowage Tackable Backdrop	Personal Side Screen	Tu® Wood Storage Cubby Tackboard	Seating
Price Category 1																										
COM	Customer's Own Material A	1	1	1	1	1	1	1	1	1	1	1	1			1	1		1	1		1		1	1	1
2V_ _	Chain	•	•	•	•	•	22	•	•	•	•		•			•	•		•						•	
8T_ _	Crossing (85_ _)	2	2	•	•	•	•	2	•	•		•	•			•	•		•	•		•	8		•	18
3DE_ _	Dex	6	2	•	•	•	•	2	•	•		•	•			•	•		•	•		•		•	•	•
2I_ _	Grasscloth	•	•	•	•	•	•	•	•	•	•		•			•	•		•	•				•	•	
1MN_ _	Monologue	2	2	•	•	•	•	2	•	•	•		•			•	•		•	•				•	•	•
5T_ _	Resonance	•	•	•	•	•	•	•	•	•	•					•								•	•	
4SC_ _	Scatter	2	2				•		•	•	•	•	•			•	•		•	•		•		•	•	•
3DN_ _	Scribe	•	•	•	•	•	•	•	•	•	•	•	•			•	•		•	•		•		•	•	•
22F_ _	Slant	6	•		•	•	•		•	•	•					•									•	
235_ _	Tailored	•		•	•	•	8	•	•	•	•					•									•	•
1WS_ _	Whisper	2	2	•	•	•	•	2	•	•	•	•	•			•	•		•	•		•		•	•	•
Price Category 2																										
3AR_ _	Aristo	2	2	•	•	•	•	2	•	•	•	•	•			•	•		•	•		•		•	•	•
51_ _	Cord	•	•	•	•	•	•	•	•	•	•					•									•	
92_ _	Crepe	2	•	•	•	•	•	•	•	•	•	•				•	•			•		•	8	•		•
3EP_ _	Epic	2	2	•	•	•	•	2	•	•		•	•			•	•		•	•		•		•	•	•
3DP_ _	Hint	•	•	•	•	•	•		•	•	•	•				•	•		•	•		•		•	•	•
4N_ _	Horizon	2	2	•	•	•	•	•	•	•	•					•	•			•				•	•	
1HA_ _	Medley	2	2	•	•	•	•	•	•	•	•	•	•	•		•	•		•	•		•	8	•		•
4ME_ _	Mellow	2	2	•	•	•	•	2	•	•	•	•	•			•	•		•	•		•		•	•	•
ZMA_ _	Metaphor - Maharam A	2	2	2	2	•	•	2	•		•	•				•	•					•				•
8I1_ _	Muse - Maharam A	2	2	2	•		•	2	•		•	•	•			•	•		•	•		•		•		•
3SL_ _	Sequel			2				2																		•
4TE_ _	Terra	2	2	•	•	•	•	2	•	•	•	•	•			•	•		•	•		•		•	•	•
3TW_ _	Twine	•	•	•	21	•	•	•	•	•	•	•	•			•	•		•	•		•		•	•	
8R_ _	Twist (5S_ _)	5	2	•	•	•	•	2	•	•	•		•			•	•		•	•				•	•	18
Price Category 3																										
43Z_ _	Fractal	•	•	•	•	•	•	•	•	•	•	•	•			•	•		•	•		•		•	•	•
47_ _	Ground Cloth®	•	•	•	•	•	•	•	•	•	•	•	•			•	•		•	•		•	8	•	•	
ZM2_ _	Meld - Maharam A *	2	2	•	•	•	•	•	•	•	•	•	•			•	•		•	•		•		•		•
4GE_ _	Parcel	•	•	•	•	•	•	•	•	•	•	•	•			•	•		•	•		•		•	•	•
8W_ _	Strands	•	•	•	•	•	•	•	•	•			•			•	•		•	•				•	•	
Price Category 4																										
3DM_ _	Daydream	2	2	•			•	2	•	•	•	•	•			•	•		•	•		•		•	•	•
1HS_ _	Hush	•	•	•	•	•	•	•	•	•	•	•			•	•		•	•		•	•		•	•	
Price Category 5																										
3CY_ _	Cozy													•												
14A_ _	Hopsak	2	2	•	•		•	2	•	•	•	•				•						•			•	•
40G_ _	Method - Maharam A	2	2	2	2	•	•	2	•	•	•	•	•			•	•		•	•		•		•		•
ZNC_ _	Nico - Maharam A	2	2	2	•	•	•	2	•	•	•	•	•			•	•		•	•		•		•		•
Price Category 6-7																										
No fabrics available at this time.																										

continued on next page

Textiles Application Chart — Workspaces *continued*

• *Available*

A *Assigned lead-time textile.*

A *Maharam textiles are on assigned lead times.*

See page 2 for exception notes.

	Action Office® Panels/Connectors	Action Office B-Style Tackboards	Action Office/Ethospace E-Style Storage	Ethospace Tiles/Connectors	Ethospace/Canvas Office Landscape® Privacy Doors	Canvas Tiles/Extended Width Tiles/Channel Tiles	Canvas B-/E-Style Storage	Canvas Tackboards	Canvas Metal Desk Hutch Back Panel	Canvas Vista™ Movable Insert and Display Unit	OE1 Boundary Agile Wall Tile	OE1 Boundary Project Board and Screens	OE1 Floating Screen	OE1 Nook Liner/Felt Screen Liner/Storage Trolley Liner	Overlay™ Performance Wall Cladding	Pari™ Screens/Flat Edge Screens/Channel Screens	Passport Work Table Screen	Renew™ Link Screens	Ambit™ Workspace Solutions Screen	Ambit Workspace Solutions Metal Screen Liner	Exclave® Tackable Boards and Stowage Tackable Backdrop	Exclave Video-Friendly Tackable Boards & Stowage Tackable Backdrop	Personal Side Screen	Tu® Wood Storge Cubby Tackboard	Seating
Price Category 8																									
1QG_ _Breeze - Maharam A													•												
Price Category 9																									
No fabrics available at this time.																									
Price Category A																									
No fabrics available at this time.																									
Price Category B																									
VM_ _ Medium - Maharam A		2				•	20	•	•	•					•										•
TI_ _ Messenger - Maharam A *		2	•	12	•	•	2	•	•	•					•	•			•						•
Price Category C																									
Z27_ _Manner - Maharam A	2	2	2	•		•	2	•	•	•					•	•			•						•
Z3_ _ Metric - Maharam A	2	2			•	•		•	•	•					•	•			•						•
Price Category D																									
ZMD_ _Mode - Maharam A	2																				•				•
ZS3_ _Spiral - Maharam A	•	•	•	•		•	•	•	•	•					•										
Price Category E																									
ZF3_ _ Flock - Maharam A												•			•				•						
TT_ _ Parallel - Maharam A	7	•		•	•	•	16	•	•	•					•										
Price Category F																									
8EX_ _ Emit - Maharam A	2	2	2	•	•	•	2	•	•																
Price Category G-Z																									
No fabrics available at this time.																									

Application Note: Herman Miller cannot guarantee material/pattern alignment in adjacent products. For example, a fabric's pattern may not align from one screen to the next, or from one panel to the next.

** Available in select colors on 20-day lead-time. Refer to "Maharam Colors - Workspaces" for 20-day colors.*

1 *Refer to price book appendices and Omni for COM information.*
2 *Available on all products except 54" and 60" wide.*
3 *Not available on AO partial-glazed panels.*
4 *Not available on Action Office (AO®) acoustical panels.*
5 *(8R_ _), (8T_ _), (85_ _), and (5S_ _) not available on AO acoustical panels and not available on 54"- or 60"-wide products.*
6 *Not available on Action Office (AO®) connectors, cable management, and spacers.*
7 *Not available on AO acoustical panels; not available on AO2 cable management panel face.*
8 *Available in select colors. See the "Proprietary Textile Colors — Workspaces" appendix.*
12 *Not available on Ethospace tackable tiles.*
16 *Not available on Canvas E-style storage.*
18 *Available on seating products in select colors. See the "Proprietary Textile Colors — Seating" appendix.*
20 *Not available on Canvas E-style storage or 60"-wide B-style storage.*
21 *Not available on Ethospace connectors and cable management tiles.*
22 *Not available as railroaded application option for* Chain *(2V00) on Canvas Extended Width Tiles.*

Textiles Application Chart — Seating

• *Available*

[A] *Assigned lead-time textile.*

[A] *Maharam textiles are on assigned lead times.*

[N] *Non-woven textile.*

See below for exception notes.

	Aeron® Chairs	Asari Work Chairs by Herman Miller™	Cosm™ Chairs	Mirra® 2 Chairs/Stools	Embody® Chairs	Fuld Nesting Chairs	Sayl® Work Chairs/Stools	Sayl Side Chairs	Setu® Chairs/Stools	Zeph® Chairs	Verus™ Work Chairs/Stools Back	Verus Work Chairs/Stools Seat	Verus Side Chairs Back	Verus Side Chairs Seat	Verus Plus Chairs	Aside® Chairs	Caper® Chairs/Stools	Lino™ Chairs Back	Lino Chairs Seat	OE1 Storage Trolley Cushion Top	Plex® Lounge Furniture	Swoop™ Lounge Seating - Fully Upholstered	Swoop Lounge Seating - Plywood	Valor™ Seating	Eames® Tandem Sling Seating	Cushion Tops	Workspaces
Price Category 1																											
COM Customer's Own Material [A]							1	1			1	1	1	1	1	1			1	1	1	1	1	1	1	1	1
231_ _ 8Z Pellicle®	•																										
1A7_ _ AireWeave™ 2				•																							
8T_ _ Crossing									•							•				•		•	•			•	•
3DE_ _ Dex							•	•	•		•	•	•	•	•	•				•	19	•		•		•	•
4RM_ _ Duo																		•									
6V_ _ Flexnet™																	•										
845_ _ Intercept			•																								
365_ _ Interweave 2											•		•														
4W_ _ Lyris 2™									•																		
1MN_ _Monologue							24	22	•			•	•	•					•	•	•	•	•	•		•	•
5H2_ _ Ripple 3D Knit										•																	
5H1_ _ Splash 3D Knit										•																	
4SC_ _ Scatter							•	•	•		•	•	•	•	•	•			•	•	•	•	•			•	•
3DN_ _ Scribe							25	22	•			•		•	•	•			•	•				•		•	
3DK_ _ Stretch Knit [A]							25																				
235_ _ Tailored							•	•	•		•	•	•	•		•			•		23			•		7	•
9NK_ _ Tuck 3D Knit						•																					
1WS_ _Whisper							24	•	•			•	•	•	•	•			•	•	•	•	•	•		•	•
Price Category 2																											
3AR_ _ Aristo							•	•	•		•	•	•	•	•	•			•	•	•	•		9		•	•
92_ _ Crepe							•	•	•		•	•	•	•	•	•			•	•	•	•	•	•		•	•
3EP_ _ Epic							•	•			•	•	•	•		•			•			•		•		7	•
3DP_ _ Hint							•	•				•		•	•	•			•				•	•		•	•
1MV_ _ Marvel [N]							25	22	•											•				•		•	
1HA_ _ Medley					•		•	22			•	•	•	•	•	•			•	•	•	•		•		•	•
4ME_ _ Mellow							•	22	•		•	•	•	•	•	•			•	•		•	•	•		•	•
ZMA_ _ Metaphor - Maharam [A]							16	16	•			•		•	•	•			•		•	•	•	•			•
8I1_ _ Muse - Maharam [A]							16	16				•		•					•					26			•
30_ _ Rhythm					23		•	•			•	•	•	•	•	•			•	•		•	•	•		•	
3SL_ _ Sequel [N]							27	27	27		27	27	27	27	27	8			27	•	•	•	•	•	23	•	•
4TE_ _ Terra							•	22			•	•	•	•	•	•			•			•	•	•		7	•
8R_ _ Twist							•	•	•		•	•	•	•	•	•			•	•	•	•	•	•		•	•
Price Category 3																											
3AC_ _ Ace							25	•			•	•	•	•	•	8			•	•	19			•		•	
43Z_ _ Fractal							•	•	•		•	•	•	•	•	•			•		•	•	•	•		•	•
8M_ _ Latitude™				23																							
ZM2_ _ Meld - Maharam * [A]		•					•	•	•		•	•	•	•	•	•			•	•	•	•				•	•
4GE_ _ Parcel							•	•	•			•	•	•	•				•		•	•	•	•		•	•
Price Category 4																											
3DM_ _Daydream							25	•	•			•		•	•	•			•	•	•	•	•			•	•
ZLR_ _ Lariat - Maharam [N] [A]							•	•	•		•	•	•	•	•					•	20			•		•	
3SY_ _ Sync					•		•	•	•		•	•	•	•		•			•		•	•	•	•		•	

continued on next page

Textiles Application Chart — Seating continued

• *Available*

[A] *Assigned lead-time textile.*

[A] *Maharam textiles are on assigned lead times.*

[N] *Non-woven textile.*

See below for exception notes.

	Aeron® Chairs	Asari Work Chairs by Herman Miller™	Cosm™ Chairs	Mirra® 2 Chairs/Stools	Embody® Chairs	Fuld Nesting Chairs	Sayl® Work Chairs/Stools	Sayl Side Chairs	Setu® Chairs/Stools	Zeph® Chairs	Verus™ Work Chairs/Stools Back	Verus Work Chairs/Stools Seat	Verus Side Chairs Back	Verus Side Chairs Seat	Verus Plus Chairs	Aside® Chairs	Caper® Chairs/Stools	Lino™ Chairs Back	Lino Chairs Seat	OE1 Storage Trolley Cushion Top	Plex® Lounge Furniture	Swoop™ Lounge Seating - Fully Upholstered	Swoop Lounge Seating - Plywood	Valor™ Seating	Eames® Tandem Sling Seating	Cushion Tops	Workspaces
Price Category 5																											
5YT _ _Arlo - Maharam [A]													•	•	•	•			•				•			•	
3CY _ _Cozy							•	•	•		•	•	•	•	•	•			•		•	•	•	•		•	
14A_ _Hopsak							•	•	•		•	•	•	•	•	•			•	•	•	•	•	•		•	•
40G_ _Method - Maharam [A]							16	16	•		•	•	•	•	•				•	•	•	•		•		•	•
ZNC_ _Nico - Maharam [A]							•	•			•	•	•	•	•	•			•		•	•	•	•		•	
3SU _ _Summit [N]							•	•	•		•	•	•	•	•				•		•	•	•	•		•	
Price Category 6																											
35_ _ Balance					•																						
Price Category 7																											
COL Customer's Own Leather [A]	1															8				1						1	
ZB3_ _Beck - Maharam [A]							16	16	•			•		•	•	•			•		•	•	•	•		•	
8PV_ _Mantle - Maharam [A]							16	16			•	•	•	•	•	•			•		•	•	•			•	
5K3_ _Rowan - Maharam [A]							16	16			•	•	•	•	•	•			•		•	•	•	•		•	
Price Category 8																											
ZLU_ _Luce - Maharam [A]		•					16	16	•			•		•	•	•			•		•	•	•	•		•	
Price Category 9																											
ZC0_ _ Campana - Maharam [A]							16	16				•		•	•	•			•		•	•	•	•		•	
ZGE_ _Gemma - Maharam [A]							•	•	•		•	•	•	•	•	•			•		•	•	•	•		•	
ZJA_ _ Jasper - Maharam [A]							16	16				•		•	•	•			•					•		7	
21_ _ Leather [N]	23															8			•	•			•			•	
Price Category 10																											
3KH_ _Firma - Maharam [A]							16		•		•	•	•	•	•	•			•		•	•	•	•		•	
ZGF_ _Gemma Multi - Maharam [A]							•	•	•		•	•	•	•	•	•			•		•	•	•	•		•	
ZGF_ _Gemma Multi Reverse - Maharam [A]							•	•	•		•	•	•	•	•	•			•		•	•	•	•		•	
ZP4_ _ Petra - Maharam [A]							16	16				•		•	•	•			•		•	•	•			•	
Price Category 11																											
3BS_ _Felix - Maharam [A]							16	16			•	•	•	•	•	•			•		•	•	•	•		•	
Price Category A																											
No fabrics available at this time.																											
Price Category B																											
VM_ _ Medium - Maharam [A]							•	•			•	•		•	•	•			•	•				•		•	•
TI_ _ Messenger - Maharam * [A]							•	•	•		•	•	•	•		•			•	•	•	•	•	26		•	•
Price Category C																											
Z27_ _Manner - Maharam [A]							•	•				•		•		•			•	•	•	•	•	•		•	•
887_ _Merit - Maharam [A]							•	•			•	•	•	•		•			•	•	•	•	•			•	
Z3_ _ Metric - Maharam [A]							•	•			•	•	•	•	•	•			•	•	•	•	•	•		•	•
8EY_ _Murmur - Maharam [A]							•	16				•		•		•			•		•	•		•		7	
Price Category D																											
8I8_ _ Bluff - Maharam [N] [A]							16	16			•	•	•	•	•	8					21		•	•		•	
ZMD_ _ Mode - Maharam [A]							18	•	•		•	•	•	•	•	•				•	•	•	•			•	•
Price Category E																											
ZAT_ _Article - Maharam [N] [A]							16	16			•	•	•	•					•					•		7	

continued on next page

Textiles Application Chart — Seating continued

• *Available*

A *Assigned lead-time textile.*

A *Maharam textiles are on assigned lead times.*

[N] *Non-woven textile.*

See below for exception notes.

	Aeron® Chairs	Asari Work Chairs by Herman Miller™	Cosm™ Chairs	Mirra® 2 Chairs/Stools	Embody® Chairs	Fuld Nesting Chairs	Sayl® Work Chairs/Stools	Sayl Side Chairs	Setu® Chairs/Stools	Zeph® Chairs	Verus™ Work Chairs/Stools Back	Verus Work Chairs/Stools Seat	Verus Side Chairs Back	Verus Side Chairs Seat	Verus Plus Chairs	Aside® Chairs	Caper® Chairs/Stools	Lino™ Chairs Back	Lino Chairs Seat	OE1 Storage Trolley Cushion Top	Plex® Lounge Furniture	Swoop™ Lounge Seating - Fully Upholstered	Swoop Lounge Seating - Plywood	Valor™ Seating	Eames® Tandem Sling Seating	Cushion Tops	Workspaces
Price Category F																											
82T_ _Apt - Maharam [N] A							18	•					•	•										•		7	
871_ _Brindle - Maharam A							16	16				•		•		•			•	•				•		•	
87Z_ _Conduit - Maharam A							16	16			•	•	•	•		•			•							7	
74M_ _Instill - Maharam [N] A							18	16			•	•	•	•					•		•		•	•		7	
89N_ _ Keen - Maharam A							16	16				•		•	•	•			•		•	•	•				
V9G_ _ Ledger - Maharam [N] A							18	16			•	•		•	•				•	•				•		•	
ZLL_ _ Loop - Maharam A							16	16				•		•		8			•					•			
82A_ _Multiply - Maharam A							16	16			•	•	•	•		•			•			•	•	•			
8LW_ _Pepper - Maharam A							16	16				•		•		•			•		21	•		9			•
Z33_ _Strum - Maharam [N] A								16														•		•		7	
Price Category G																											
ZC2_ _Compound - Maharam [N] A							16	16			•	•	•	•		8			•		•		•	•		7	
ZF1_ _ Fold - Maharam [N] A							16	16																•		7	
8AR_ _ Gild - Maharam A								16				•	•	•	•						21	•	•	•			
ZPR_ _ Pare - Maharam A							18	16				•		•		8			•		•	•		•		7	
ZRF_ _ Runner - Maharam A							16	16												•				•		•	
Price Category H																											
ZT_ _ Circles - Maharam A							16	16																		•	
ZK_ _ Dot Pattern - Maharam A							•	•	•			•		•		•				•				•		•	
ZL_ _ Small Dot Pattern - Maharam A							•	•	•			•		•		•				•				•		•	
Price Category I																											
7CW_ _Cursive - Maharam A							16	16			•	•	•	•		8			•	•		•		•		•	
ZSY_ _ Study - Maharam A																				•				•			
Price Category J-K																											
No fabrics available at this time.																											
Price Category L																											
ZMK_ _ Minicheck - Maharam A							•	•				•	•	•		•			•					•		7	
Price Category M																											
ZF2_ _ Fruit - Maharam A								16								•										7	
Price Category N-Q																											
No fabrics available at this time.																											
Price Category R																											
Stow Leather		•																									
Price Category S-Z																											
No fabrics available at this time.																											

continued on next page

Textiles Application Chart — Seating continued

• *Available*

A *Assigned lead-time textile.*
A *Maharam textiles are on assigned lead times.*
[N] *Non-woven textile.*

See below for exception notes.

Application Note: Herman Miller cannot guarantee material/pattern alignment in adjacent products. For example, a fabric's pattern may not align from one pedestal cushion top to the next, or from one chair to another.

** Available in select colors on 20-day lead-time. Refer to "Maharam Colors - Seating" for 20-day colors.*

1 *Refer to price book appendices and Omni for COM/COL information.*
7 *Available on* 1" *Cushion Tops only.*
8 *Only available on the Aside nonupholstered outer back option (PB).*
9 *Available on Valor upholstered seat only.*
16 *Available on Sayl Chair seat.*
18 *Available on Sayl Chair seat and upholstered mid-back.*
19 *Available on Plex seat only.*
20 *Not available on Plex Club Chair with Headrest.*
21 *Available on Plex seat and on Ottoman.*
22 *Not available on Sayl side chairs with upholstered backs.*
23 *Available in select colors. Refer to "Textile Colors" for color offering.*
24 *Not available on Sayl upholstered High-Back Work Chairs.*
25 *Not available on Sayl upholstered back work chairs.*
26 *Available in select colors. Refer to "Textile Colors" for color offering.*
27 *Not available in* 3SL15 Carbon Dark.

Price Category 1

Customer's Own Material

See Order Information in Appendices. Assigned lead-time textile. A

8Z Pellicle®

Seating
For New Aeron® Chairs
56% elastomeric
44% polyester

23101	Mineral
23102	Carbon
23103	Graphite

AireWeave™ 2

Seating
For Mirra® 2 Chairs
67% elastomeric
33% antimony-free polyester

1A701	Alpine
1A702	Slate Grey
1A703	Graphite
1A704	Lime Green
1A705	Cappuccino
1A706	Urban Orange
1A707	Dark Turquoise
1A708	Twilight

Chain

Workspaces
66" wide
100% recycled polyester
with 12% ocean bound plastic

2V01	Pearl
2V02	Oyster
2V03	Wheat
2V04	Linen
2V05	Wicker
2V06	Bamboo
2V07	Sage
2V08	Spring Wood
2V09	Iceberg

Crossing

Seating/Workspaces
54" wide
86% antimony-free polyester
14% polyester

8T03	Wicker *
8T04	Porcelain *
8T05	Warm Grey *
8T10	Tomato
8T17	Cerulean
8T18	Indigo
8T19	Shale *
8T22	Tin *
8T23	Graphite
8T24	Black

Crossing

Workspaces
For workspaces products only.
54" wide
86% antimony-free polyester
14% polyester

8501	Ivory *
8502	Oyster *

* Colors available on Exclave® Video-friendly Tackable Boards and Stowage Tackable Backdrop

Dex

Ancillary/Seating/Workspaces
54" wide
67% recycled polyester
33% polyester

3DE01	Frost
3DE02	Silver Pine
3DE03	Stone
3DE04	Shale
3DE05	Charcoal
3DE06	Gossamer
3DE07	Pine

Duo

Seating
For Lino™ Chairs
52% polyester
48% elastomeric

4RM01	Mineral
4RM02	Poppy
4RM03	Green Leaf
4RM04	Jade
4RM05	Shadow
4RM06	Graphite

Flexnet™

Seating
For Caper® Chairs
69% elastomeric
31% polyester

6V01	Black
6V02	Silver Grey

Grasscloth

Workspaces
66" wide
100% recycled polyester
with 11% ocean bound plastic

2I01	Silver Birch
2I02	Pampas
2I03	Sedge
2I07	Lea
2I08	Taro
2I09	Steam Grey
2I13	Gravel

Intercept

Seating
For Cosm™ Chairs
60% elastomeric
40% polyester

84501	Graphite
84502	Carbon
84503	Mineral
84504	Nightfall
84505	Glacier
84506	Canyon

Interweave 2

Seating
For Verus™ Chairs
65% elastomeric
35% polyester

36501	Iceberg
36502	Poppy
36503	Beachglass
36504	Blue Grotto
36505	Slate
36506	Shale

Lyris 2™

Seating
For Setu® Chairs
74% elastomeric
26% polyester

4W21	Alpine
4W23	Chartreuse
4W25	Berry Blue
4W26	Slate Grey
4W28	Chino
4W31	Graphite

Monologue

Ancillary/Seating/Workspaces
54" wide
56% recycled polyester
44% polyester

1MN01	Linen
1MN02	Alabaster
1MN04	Folkstone
1MN05	Silver Pine
1MN06	Slate
1MN07	Seed
1MN09	Persimmon
1MN11	Meadow
1MN12	Blue Sky
1MN13	Blue Spruce
1MN14	Deep Sea

Price category 1 continued on next page

- Maharam textiles are on assigned lead times A.
- Fabric numbers are listed as Herman Miller fabric number/Maharam fabric number.

Price Category 1
continued

Resonance
Workspaces
66” wide
100% polyester

5T04	Greige
5T05	Porcelain
5T06	Alabaster
5T15	Iris
5T28	Sugar
5T47	Tobacco
5T54	Saltbush
5T57	Seed
5T58	Sepia
5T60	Iceberg
5T65	Red
5T67	Boysenberry
5T68	Pistachio
5T69	Green Apple
5T71	Jade
5T72	Blue Green
5T74	Twilight

Ripple 3D Knit
Seating
Available only on Zeph® Chairs.
knit to size
99% recycled polyester
1% lycra

5H201	Black
5H202	Carbon
5H203	Alpine
5H204	Silt
5H205	Tea Rose
5H206	Cocoa
5H207	Persimmon
5H208	Blaze
5H209	Cayenne
5H210	Falcon
5H211	Mustard Seed
5H212	Patina
5H213	Olive
5H214	Moss
5H215	Aloe
5H216	Glacier
5H217	Ultramarine
5H218	Nightfall
5H219	Bluebell
5H220	Boysenberry
5H221	Nightfall/Bluebell
5H222	Patina/Alpine
5H223	Cayenne/Glacier
5H224	Tea Rose/Olive
5H225	Silt/Blaze

Scatter
Ancillary/Seating/Workspaces
54” wide
100% recycled polyester,
with 26% ocean bound plastic

4SC01	Alpine
4SC02	Fog
4SC03	Shale
4SC04	Persimmon
4SC07	Olive
4SC08	Glacier
4SC09	Blue Sky
4SC10	Lagoon
4SC11	Slate Grey
4SC12	Blue Black

Scribe
Seating/Workspaces
54” wide
100% recycled polyester
with 53% ocean bound plastic

3DN01	Spring Wood
3DN02	Poplar
3DN03	Pewter
3DN04	Deep Sea
3DN05	Fir
3DN06	Nutmeg

Slant
Workspaces
66” wide
51% polyester
49% recycled polyester

22F04	Pesto
22F06	Neptune
22F07	Blueberry
22F10	Pumpkin
22F12	Silver Birch
22F13	Bluestone
22F15	Shale

Splash 3D Knit
Seating
Available only on Zeph® Chairs.
knit to size
98% recycled polyester
2% lycra

5H101	Black
5H102	Carbon
5H103	Alpine
5H104	Silt
5H105	Tea Rose
5H106	Cocoa
5H107	Persimmon
5H108	Blaze
5H109	Cayenne
5H110	Falcon
5H111	Mustard Seed
5H112	Patina
5H113	Olive
5H114	Moss
5H115	Aloe
5H116	Glacier
5H117	Ultramarine
5H118	Nightfall
5H119	Bluebell
5H120	Boysenberry

Stretch Knit
Seating
Assigned lead-time textile. A
Available only on Sayl®
Suspension Back Work Chairs
97% polyester, 3% spandex

3DK01	Fog
3DK02	Slate Grey
3DK03	Java
3DK04	Black
3DK05	Red
3DK06	Green Apple
3DK07	Berry Blue

Price category 1 continued on next page

- Maharam textiles are on assigned lead times A.
- Fabric numbers are listed as Herman Miller fabric number/Maharam fabric number.

Price Category 1
continued

Tailored	
Ancillary/Seating/Workspaces	
54” wide	
56% polyester	
44% recycled polyester	
23501	Studio White * **
23502	Sugar *
23503	Tomato
23506	Chive
23508	Cobalt
23509	Cadet
23510	Fog
23511	Graphite
23512	Black
23513	Coffee

* Colors not available on Plex™ Lounge Furniture.
** Color not available on Canvas Tiles.

Tuck 3D Knit	
Seating	
Available only on Fuld Nesting Chairs.	
knit to size	
56% polyester	
44% recycled polyester	
9NK01	Alpine
9NK02	Carbon
9NK03	Nightfall
9NK04	Olive
9NK05	Cocoa
9NK06	Canyon

Whisper	
Ancillary/Seating/Workspaces	
54” wide	
73% recycled polyester	
27% polyester	
with 11.3% ocean bound plastic	
1WS01	Sand Dollar
1WS02	Pebble
1WS03	Silver Birch
1WS04	Iceberg
1WS05	Silver Pine
1WS06	Carbon
1WS07	Cumin
1WS12	Willow
1WS13	Sea Grass
1WS14	Pool
1WS15	Blueberry
1WS16	Glacier
1WS17	Grey
1WS18	Canyon

Price Category 2

Aristo	
Ancillary/Seating/Workspaces	
54” wide	
88% recycled polyester	
12% polyester	
Acrylic backing	
3AR01	Forest Moss
3AR02	Light Brindle
3AR03	Mink
3AR04	Copper
3AR05	Adobe
3AR06	Cherry
3AR07	Lilac
3AR08	Green Apple
3AR09	Surf
3AR10	Waterfall
3AR11	Cadet
3AR12	Tin
3AR13	Pewter
3AR14	Grey Brindle
3AR15	Grey Black

Cord	
Workspaces	
66” wide	
51% antimony-free polyester	
49% polyester	
5101	Ivory
5102	White Ash
5103	Linen
5104	Bamboo
5105	Sepia
5107	Sesame
5109	Bayou
5111	Spring Wood
5112	Summer White

Crepe	
Ancillary/Seating/Workspaces	
54” wide	
100% recycled polyester,	
with 43.6% ocean bound plastic	
9201	Licorice
9203	Smoke
9207	Cherry
9223	Cadet
9241	Beachglass
9249	Stone *
9251	Fog *
9252	Slate Grey
9261	Shale
9262	Graphite
9265	Mineral
9266	Persimmon
9267	Juniper
9268	Glacier
9269	Cascade
9270	Navy

* Colors available on Exclave® Video-friendly Tackable Boards and Stowage Tackable Backdrop.

Price category 2 continued on next page

- Maharam textiles are on assigned lead times A.
- Fabric numbers are listed as Herman Miller fabric number/Maharam fabric number.

Price Category 2
continued

Epic
Ancillary/Seating/Workspaces
54” wide
56% recycled polyester
44% polyester
Acrylic backing

3EP01	Alabaster
3EP02	Smoke
3EP03	Falcon
3EP05	Copper
3EP06	Urban Orange
3EP07	Poppy
3EP10	Clover
3EP11	Loden
3EP14	Peacock
3EP15	Cadet
3EP16	Indigo
3EP17	Spring Wood
3EP18	Grey Brindle
3EP19	Seed
3EP20	Carbon Dark

Hint
Ancillary/Seating/Workspaces
54” wide
76% recycled polyester
24% polyester

3DP01	Sediment
3DP02	Gunmetal
3DP03	Silt
3DP04	Porcelain
3DP05	Indigo
3DP06	Fern
3DP07	Adobe
3DP08	Red Sea

Horizon
Workspaces
54” wide
65% antimony-free polyester
35% polyester

4N01	Rye Grass
4N02	Sugar Pine
4N03	Silver Pine
4N04	White Ash
4N05	Spring Wood
4N08	Haystack
4N09	Oat Grass
4N13	Pine Cone
4N15	Elderberry

Marvel
Ancillary/Seating
54” wide
100% pvc-free polyurethane
antimicrobial, antibacterial finish

1MV01	Summer White
1MV02	Sand Dollar
1MV03	Espresso
1MV04	Folkstone Grey
1MV05	Graphite
1MV06	Onyx
1MV07	Polar Blue
1MV08	Blush Grey
1MV12	Red
1MV14	Pine
1MV15	Teal Green
1MV16	Twilight

Medley
Ancillary/Seating/Workspaces
54” wide
100% polyester

1HA01	Stone *
1HA02	Trail
1HA03	Charcoal
1HA04	Cinder
1HA07	Chutney
1HA09	Feather Grey *
1HA11	Loden
1HA13	Bayou *
1HA14	Blue Grotto
1HA15	Blueberry
1HA22	Khaki
1HA23	Pewter
1HA24	Yellow Oxide
1HA25	Vintage Rose
1HA26	Raspberry
1HA27	Acai Berry

* Colors available on Exclave® Video-friendly Tackable Boards and Stowage Tackable Backdrop

Mellow
Ancillary/Seating/Workspaces
54” wide
100% recycled polyester,
with 16% ocean bound plastic

4ME01	Mineral
4ME04	Olive
4ME05	Glacier
4ME06	Oceanside
4ME07	Charcoal

Metaphor – Maharam
Ancillary/Seating/Workspaces
54” wide
100% polyester
Acrylic backing

ZMA01/466553-001	Afterfeather *
ZMA02/466553-002	Moonflower
ZMA03/466553-003	Handcraft
ZMA04/466553-004	Crossroad
ZMA05/466553-005	Chondrite
ZMA06/466553-006	Detective
ZMA07/466553-007	Steamship
ZMA08/466553-008	Electricity
ZMA09/466553-009	Takeoff
ZMA10/466553-010	Parachute
ZMA11/466553-011	Blueshift
ZMA12/466553-012	Dockyard
ZMA13/466553-013	Bathe
ZMA14/466553-014	Icebound
ZMA15/466553-015	Thermosphere
ZMA16/466553-016	Aboard
ZMA17/466553-017	Agateware
ZMA18/466553-018	Homeland
ZMA19/466553-019	Rockfall
ZMA20/466553-020	Undergrowth
ZMA21/466553-021	Gremolata
ZMA22/466553-022	Patina
ZMA23/466553-023	Sylvan
ZMA24/466553-024	Outfield
ZMA25/466553-025	Windbreak
ZMA26/466553-026	Saguaro

Price category 2 continued on next page

- Maharam textiles are on assigned lead times A.
- Fabric numbers are listed as Herman Miller fabric number/Maharam fabric number.

Price Category 2
continued

Metaphor *continued*	
ZMA27/466553-027	Barnwood
ZMA28/466553-028	Cookshop
ZMA29/466553-029	Amandine
ZMA30/466553-030	Bodhran
ZMA31/466553-031	Centerstage
ZMA32/466553-032	Focaccia
ZMA33/466553-033	Bumblebee
ZMA34/466553-034	Microbrew
ZMA35/466553-035	Sauna
ZMA36/466553-036	Gazebo
ZMA37/466553-037	Pirouette
ZMA38/466553-038	Heartbeat
ZMA39/466553-039	Shino
ZMA40/466553-040	Sunrise
ZMA41/466553-041	Florist
ZMA42/466553-042	Beadwork
ZMA43/466553-043	Framboise
ZMA44/466553-044	Wisteria
ZMA45/466553-045	Warrior

* Colors not available on Eames Aluminum Group, Soft Pad, Sofa Compact, Molded Fiberglass/Plastic Chairs, Task Chair, Wire Chairs, Nelson Platform Bench Cushion, Swoop Plywood Lounge Chair.

Muse – Maharam	
Ancillary/Seating/Workspaces	
54” wide	
100% post-consumer recycled polyester	
8I101/466487-001	Crescendo
8I102/466487-002	Resonate
8I103/466487-003	Runway
8I104/466487-004	Ascend
8I105/466487-005	Veil *
8I106/466487-006	Refresh *
8I107/466487-007	Clear *
8I108/466487-008	Fantasy
8I109/466487-009	Miso
8I110/466487-010	Compass
8I111/466487-011	Bergamot *
8I112/466487-012	Grasshopper

Muse *continued*	
8I113/466487-013	Goal
8I114/466487-014	Mistletoe
8I115/466487-015	Seaglass *
8I116/466487-016	Frigid
8I117/466487-017	Riverbend
8I118/466487-018	Noble
8I119/466487-019	Pulsar
8I120/466487-020	Velella
8I121/466487-021	Sailboat
8I122/466487-022	Sparse
8I123/466487-023	Vase
8I124/466487-024	Haven
8I125/466487-025	Mead
8I126/466487-026	Neat
8I127/466487-027	Jovial
8I128/466487-028	Theater
8I129/466487-029	Poinsettia
8I130/466487-030	Celebrate
8I131/466487-031	Spectacle

* Colors not available on Valor Seating.

Rhythm	
Ancillary/Seating	
54” wide	
100% polyester	
3002	Green Apple
3004	Bayou
3005	Berry Blue
3006	Iris
3007	Twilight
3009	Poppy
3010	Molasses
3012	Khaki
3013	Mink
3014	Black *
3015	Charcoal *

* Colors available on Embody® Chair.

Sequel	
Ancillary/Seating/Workspaces	
54” wide	
100% vinyl	
100% polyester knit backing	
Resilience® finish	
3SL01	White
3SL02	Pebble
3SL03	Mushroom
3SL04	Stone
3SL06	Rattan
3SL09	Seal
3SL10	Blue Fog
3SL11	Folkstone
3SL12	Shale
3SL13	Slate Grey
3SL14	Charcoal
3SL15	Carbon Dark
3SL28	Navy *

* Color available on Eames® Tandem Sling Seating.

Terra	
Ancillary/Seating/Workspaces	
54” wide	
100% post-consumer recycled biodegradable polyester *	
4TE01	Spring Wood
4TE02	Zinc
4TE03	Pine Cone
4TE04	Charcoal

* 1% biodegradation in 1,278 days under ASTM D5511 conditions. No evidence of further degradation.

Twine	
Workspaces	
66” wide	
100% recycled polyester	
3TW01	Silver Birch
3TW02	Ivory
3TW03	Alabaster
3TW04	Bamboo
3TW05	Iceberg
3TW06	Charcoal
3TW07	Feather Grey
3TW08	Shale

Twist	
Ancillary/Seating/Workspaces	
54” wide	
80% antimony-free polyester	
13% recycled polyester	
7% polyester	
8R05	Wicker
8R10	Poppy
8R14	Tin
8R15	Shale
8R16	Graphite
8R17	Birch
8R18	Sepia
8R22	Blueberry
8R23	Green Apple
8R26	Gunmetal
8R27	Cinder
8R29	Pekoe
8R33	Forest
8R35	Waterfall
8R36	Midnight Blue
8R37	Carbon Dark

Twist	
Workspaces	
For workspaces products only.	
54” wide	
80% antimony-free polyester	
13% recycled polyester	
7% polyester	
5S03	Oyster

- Maharam textiles are on assigned lead times A.
- Fabric numbers are listed as Herman Miller fabric number/Maharam fabric number.

Price Category 3

Ace

Ancillary/Seating
54” wide
100% polyurethane
Polyester knit backing
Stain resistant finish

3AC01	Summer White
3AC02	White Ash
3AC03	Rye
3AC04	Metal
3AC05	Clay
3AC06	Chestnut
3AC08	Camelback
3AC09	Chipotle
3AC12	Artichoke
3AC13	Sepia Dark
3AC14	Aloe
3AC15	Flint
3AC16	Blue Sky
3AC17	Oceanside
3AC18	Midnight
3AC20	Frost
3AC21	Lead
3AC22	Black

Fractal

Ancillary/Seating/Workspaces
58” wide
84% recycled polyester
16% polyester

43Z01	Granite
43Z02	Golden Olive
43Z03	Verdant
43Z04	Cadet

Ground Cloth®

Workspaces
66” wide
100% polyester

4701	Vapor Grey
4721	Warm White *
4722	Fog *
4723	Straw *
4724	Red Orange *
4726	Green Apple *
4727	Caribbean *
4728	Midnight *
4729	Cappuccino *

* Colors available on Exclave® Video-friendly Tackable Boards and Stowage Tackable Backdrop

Latitude

Seating
Colors for Mirra 2 Chairs
100% polyester

8M10	Alpine
8M17	Black
8M23	French Press
8M27	Cordovan
8M28	Ochre
8M28	Ultramarine
8M28	Olive

Meld – Maharam

Ancillary/Seating/Workspaces
54” wide
68% post-consumer recycled polyester
32% polyester
PFOA-Free stain resistant

ZM201/466387-201	Vast
ZM202/466387-202	Panda **
ZM203/466387-203	Skyline *
ZM204/466387-204	Knight **
ZM205/466387-205	Quill **
ZM206/466387-206	Pipe
ZM207/466387-207	Grate *
ZM208/466387-208	Gloss

Meld *continued*

ZM209/466387-209	Bulb
ZM210/466387-210	Bride
ZM211/466387-211	Stark
ZM212/466387-212	Seashell
ZM213/466387-213	Antler
ZM214/466387-214	Crater *
ZM215/466387-215	Perennial
ZM216/466387-216	Mulberry
ZM217/466387-217	Fuchsia *
ZM218/466387-218	Amethyst *
ZM219/466387-219	Merlot
ZM220/466387-220	Magma *
ZM221/466387-221	Rooster
ZM222/466387-222	Heat *
ZM223/466387-223	Clementine
ZM224/466387-224	Fox
ZM225/466387-225	Kiss *
ZM226/466387-226	Bare
ZM227/466387-227	Blonde
ZM228/466387-228	Mimosa
ZM229/466387-229	Comet *
ZM230/466387-230	Honeydew
ZM231/466387-231	Wild *
ZM232/466387-232	Vine
ZM233/466387-233	Seed
ZM234/466387-234	Kale *
ZM235/466387-235	Waterfall *
ZM236/466387-236	Nordic *
ZM237/466387-237	Reef *
ZM238/466387-238	Wave
ZM239/466387-239	Isle **
ZM240/466387-240	Creek
ZM241/466387-241	Mariner *
ZM242/466387-242	Globe
ZM243/466387-243	Spa

* Colors available on 20-day lead time.
** Colors available on 10-day lead time.

Parcel

Ancillary/Seating/Workspaces
54” wide
100% recycled polyester

4GE01	Gunmetal
4GE02	Brindle
4GE03	Bayou
4GE04	Pesto
4GE05	Golden Olive
4GE06	Copper Sea

Saille - Geiger Textile

Ancillary
57” wide
69% cotton
31% polyester
PFOA-Free stain resistant finish
Acrylic backing

18001	Coal
18002	Shale
18003	Haze
18004	Stone
18005	White *
18006	Beach
18007	Sand
18008	Blush
18009	Brick
18010	Fog
18011	Celadon
18012	Poolside
18013	Summer Sky
18014	Lake
18015	Midnight Blue

* Color not available on Eames® Soft Pad Group Chairs/Ottomans.

Price category 3 continued on next page

- Maharam textiles are on assigned lead times A.
- Fabric numbers are listed as Herman Miller fabric number/Maharam fabric number.

Price Category 3
continued

Price Category 4

Strands

Workspaces
66” wide
100% recycled polyester

8W01	Pebble
8W02	Porcelain
8W03	Taupe
8W04	Honey
8W05	Khaki
8W06	Rye
8W07	Wicker
8W08	Tin
8W09	Cool Grey

Cygnus

Ancillary
For Eames® Aluminum Group Chairs
69% elastomeric
31% polyester

5401	Black
5402	Zinc
5403	Quartz

Daydream

Ancillary/Seating/Workspaces
54” wide
48% wool
41% recycled polyester
9% nylon
2% polyester

3DM01	Rye Grass
3DM02	Silver Birch
3DM03	Pewter
3DM04	Graphite
3DM05	Black
3DM06	Lemongrass
3DM07	Permission
3DM08	Juniper
3DM09	Sea Grass
3DM10	Nightfall

Hush

Workspaces
66” wide
80% polyester
20% viscose

1HS01	Canyon
1HS02	Pesto
1HS03	Bayou
1HS04	Greystone
1HS05	Charcoal
1HS06	Rye Grass
1HS07	Cool Grey
1HS08	Dark Grey
1HS09	Aqua Green
1HS10	Nightfall

Kalista - Geiger Textile

Ancillary
54” wide
71% post-industrial recycled cotton
18% post-industrial recycled polyester
11% polyester
PFOA-Free stain resistant finish

1AL01	Cotton
1AL02	Natural
1AL03	Titanium
1AL04	Pewter
1AL05	Starry Night
1AL06	Red Hot
1AL07	Sun Kissed
1AL08	Dune
1AL09	Beach Glass
1AL10	Bluestone
1AL11	Seaside
1AL12	Night Sky

Lariat – Maharam

Ancillary/Seating
54” wide
100% vinyl

ZLR01/440401-001	001
ZLR02/440401-002	002
ZLR04/440401-004	004
ZLR06/440401-006	006
ZLR07/440401-007	007
ZLR08/440401-008	008
ZLR10/440401-010	010
ZLR11/440401-011	011
ZLR13/440401-013	013
ZLR14/440401-014	014
ZLR15/440401-015	015
ZLR16/440401-016	016
ZLR18/440401-018	018
ZLR20/440401-020	020
ZLR21/440401-021	021
ZLR24/440401-024	024
ZLR25/440401-025	025
ZLR26/440401-026	026

Lariat *continued*

ZLR28/440401-028	028
ZLR31/440401-031	031
ZLR32/440401-032	032
ZLR33/440401-033	033
ZLR34/440401-034	034
ZLR38/440401-038	038
ZLR39/440401-039	Granite
ZLR40/440401-040	Linen
ZLR41/440401-041	Stella
ZLR42/440401-042	Saddle
ZLR43/440401-043	Holly
ZLR44/440401-044	Maroon
ZLR45/440401-045	Siren
ZLR46/440401-046	Reseda
ZLR47/440401-047	Purslane
ZLR48/440401-048	Spire
ZLR49/440401-049	Papyrus
ZLR50/440401-050	Chickadee
ZLR51/440401-051	Requiem

Sync

Ancillary/Seating
55” wide
100% polyester

3SY01	Pine Cone
3SY03	Canyon
3SY04	Truffle
3SY06	Everglade
3SY08	Nightfall
3SY09	Dark Mineral
3SY10	Slate Grey
3SY11	Dark Carbon
3SY12	Black

- Maharam textiles are on assigned lead times A.
- Fabric numbers are listed as Herman Miller fabric number/Maharam fabric number.

Price Category 5

Arlo - Maharam

Ancillary/Seating
70% wool
30% polyester

5YT01	Turn
5YT02	Embers
5YT03	Parallel
5YT04	Octave
5YT05	Musing
5YT06	Summon
5YT07	Dynamic
5YT08	Signals
5YT09	Aspect
5YT10	Dedicate
5YT11	Juniper
5YT12	Cilantro
5YT13	Hawthorn
5YT14	Thread
5YT15	Spalted
5YT16	Warmer
5YT17	Misted
5YT18	Share
5YT19	Chord
5YT20	Heroic
5YT21	Arpeggio
5YT22	Roots
5YT23	Sumac
5YT24	Purl
5YT25	Homeward

Cozy

Ancillary/Seating
54” wide
100% wool

3CY01	Heathered Warm Grey
3CY02	Heathered Rye Grass
3CY03	Heathered Cool Grey
3CY05	Heathered Black
3CY06	Heathered Persimmon
3CY07	Heathered Loden
3CY09	Heathered Lagoon
3CY10	Heathered Twilight

Hopsak

Ancillary/Seating/Workspaces
56” wide
100% recycled polyester

14A20	Black
14A22	Raw Umber Dark
14A26	Grey Blue Dark
14A30	Sepia Dark
14A38	Emerald Dark
14A39	Yellow Dark
14A40	Orange
14A41	Sienna
14A42	Olive Green Dark
14A43	Crimson
14A44	Crimson Dark Dark
14A45	Violet Dark
14A46	Pink Dark Dark
14A47	Ultramarine Dark
14A48	Cobalt Blue
14A49	Terra Cotta
14A50	Ochre Dark

Ingenue - Geiger Textile

Ancillary
54” wide
28% wool
26% viscose
25% acrylic
16% polyester
5% cotton
PFOA-Free stain resistant finish

1GH01	Sand
1GH02	Fog
1GH03	Flannel
1GH04	Trench
1GH05	Vermillion
1GH06	Adriatic
1GH07	Umber
1GH08	Charcoal

Method - Maharam

Ancillary/Seating/Workspaces
54” wide
100% recycled polyester
with 9% ocean-bound plastic

40G01/466579-001	Inspire
40G02/466579-002	Rhea
40G03/466579-003	Noise
40G04/466579-004	Speedway
40G05/466579-005	Villanelle
40G06/466579-006	Maestro
40G07/466579-007	Destiny
40G08/466579-008	Possess
40G09/466579-009	Waterside
40G10/466579-010	Relax
40G11/466579-011	Delightful
40G12/466579-012	Parrotlet
40G13/466579-013	Verdurous
40G14/466579-014	Bosky
40G15/466579-015	Acreage
40G16/466579-016	Allude
40G17/466579-017	Tweed
40G18/466579-018	Korma
40G19/466579-019	Fossilize
40G20/466579-020	Cattail
40G21/466579-021	Shortcake
40G22/466579-022	Racecar
40G23/466579-023	Courtship
40G24/466579-024	Jam
40G25/466579-025	Sparrow

Nico - Maharam

Ancillary/Seating/Workspaces
54” wide
63% wool
21% polyester
16% solution-dyed nylon

ZNC01/466564-001	Alcazar
ZNC02/466564-002	Ironclad
ZNC03/466564-003	Tune
ZNC04/466564-004	Bridegroom
ZNC05/466564-005	Diode
ZNC06/466564-006	Jest
ZNC07/466564-007	Sanctuary
ZNC08/466564-008	Aquarius
ZNC09/466564-009	Houseboat
ZNC10/466564-010	Olympian
ZNC11/466564-011	Tennis
ZNC12/466564-012	Dressage
ZNC13/466564-013	Zing
ZNC14/466564-014	Bitterroot
ZNC15/466564-015	Gemini
ZNC16/466564-016	Posh
ZNC17/466564-017	Sizzle
ZNC18/466564-018	Cheerful
ZNC19/466564-019	Watermelon
ZNC20/466564-020	Toucan
ZNC21/466564-021	Rosin
ZNC22/466564-022	Jousting
ZNC23/466564-023	Jojoba
ZNC24/466564-024	Dromedary
ZNC25/466564-025	Toasty
ZNC26/466564-026	Casaba
ZNC27/466564-027	Greenhouse
ZNC28/466564-028	Sibyl
ZNC29/466564-029	Spearmint
ZNC30/466564-030	Pothos
ZNC31/466564-031	Calathea
ZNC32/466564-032	Landscape
ZNC33/466564-033	Espalier
ZNC34/466564-034	Gecko
ZNC35/466564-035	Meditation

Price category 5 continued on next page

- Maharam textiles are on assigned lead times A.
- Fabric numbers are listed as Herman Miller fabric number/Maharam fabric number.

Price Category 5
continued

Price Category 6

Price Category 7

Summit	
Ancillary/Seating	
54” wide	
100% silicone	
Polyester knit backing	
3SU02	Oyster
3SU03	Zinc
3SU04	Sparrow
3SU07	Black
3SU09	Beachglass
3SU10	Midnight

Vionette - Geiger Textile	
Ancillary	
55” wide	
100% polyester	
1GJ01	White Sand Mix
1GJ02	Desert Mix
1GJ03	Light Gray Mix
1GJ04	Pewter Mix
1GJ05	Cobalt Mix
1GJ06	Prussian Blue Mix
1GJ07	Chocolate Mix
1GJ08	Champagne
1GJ09	Morning Sky
1GJ10	Aquatic
1GJ11	Sapphire
1GJ12	Midnight Blue
1GJ13	Shadow
1GJ14	Java
1GJ15	Carbon
1GJ16	Black
1GJ17	Claret
1GJ18	Poppy

Balance	
Seating	
For Embody® chairs	
100% polyester	
3512	Carbon
3513	Black

Outdoor Weave	
Ancillary	
For Eames® Aluminum Group	
Outdoor Chairs	
50% elastomeric	
50% polypropylene	
7203	Lead
7205	Graphite

Customer’s Own Leather
See Order Information in Appendices. Assigned lead-time textile. A

Bamboo	
Ancillary	
83% bamboo	
17% polyurethane	
1BB01	Ivory
1BB02	Russet
1BB03	Black

Beck – Maharam	
Ancillary/Seating	
55” wide	
78% wool	
22% nylon	
ZB301/466571-001	Overshadow
ZB302/466571-002	Molecule
ZB303/466571-003	Zeitgeist
ZB304/466571-004	Blacksmith
ZB305/466571-005	Cornerstone
ZB306/466571-006	Chainmail
ZB307/466571-007	Buckram
ZB308/466571-008	Callisto
ZB309/466571-009	Interlude
ZB310/466571-010	Letterpress
ZB311/466571-011	Memoir
ZB312/466571-012	Litmus
ZB313/466571-013	Stoic
ZB314/466571-014	Inkpad
ZB315/466571-015	Praxis
ZB316/466571-016	Astute
ZB317/466571-017	Percolate
ZB318/466571-018	Halocline
ZB319/466571-019	Semblance
ZB320/466571-020	Loch
ZB321/466571-021	Lido
ZB322/466571-022	Underwater
ZB323/466571-023	Tetrapod
ZB324/466571-024	Nymph
ZB325/466571-025	Appalachian

Beck *continued*		
ZB326/466571-026	Menthol	
ZB327/466571-027	Woodruff	
ZB328/466571-028	Malachite	
ZB329/466571-029	Botanist	
ZB330/466571-030	Woodlet	
ZB331/466571-031	Katydid	
ZB332/466571-032	Exuberant	
ZB333/466571-033	Retrospect	
ZB334/466571-034	Lambic	
ZB335/466571-035	Argil	
ZB336/466571-036	Brushstroke	
ZB337/466571-037	Candescent	
ZB338/466571-038	Reedbuck	
ZB339/466571-039	Clayware	
ZB340/466571-040	Curio	
ZB341/466571-041	Whimsy	
ZB342/466571-042	Effervescent	
ZB343/466571-043	Lingonberry	
ZB344/466571-044	Resplendent	
ZB345/466571-045	Hollyhock	
ZB346/466571-046	Filigree	
ZB347/466571-047	Plutonic	
ZB348/466571-048	Foundry	
ZB349/466571-049	Patisserie	
ZB390	Gold	007/032/033 *
ZB391	Russet	036/040/039 *
ZB392	Indigo	008/013/014 *
ZB393	Forest	006/031/028 *

* Colors available only on Girard Color Wheel Ottoman.

Price category 7 continued on next page

- Maharam textiles are on assigned lead times A.
- Fabric numbers are listed as Herman Miller fabric number/Maharam fabric number.

Price Category 7
continued

Bellano - Geiger Textile

Ancillary
55” wide
75% wool
10% linen
8% nylon
7% alpaca

1AX01	Pearl
1AX02	Fog
1AX03	Fawn
1AX04	Pumice
1AX05	Pewter
1AX06	Atlantic
1AX07	Black Green
1AX08	Adriatic
1AX09	Coffee
1AX10	Charcoal
1AX11	Umber
1AX12	Magenta
1AX13	Bittersweet
1AX14	Sunflower

Capri - Geiger Textile

Ancillary
55” wide
36% cotton
32% acrylic
24% rayon
8% polyester
PFOA-Free stain resistant finish
Acrylic backing

17201	Snow
17202	Stone
17203	Trench
17204	Graphite
17205	Anthracite
17206	Light Silver
17207	Russet
17208	Chestnut Brown
17209	Sand
17210	Sterling
17211	Cobalt
17212	Ink

Mantle - Maharam

Ancillary/Seating
59% recycled polyester
37% polyester
4% spandex

8PV01	Pavement
8PV02	Future
8PV03	Piper
8PV04	Manifesto
8PV05	Mapo
8PV06	Redwood
8PV07	Rocky
8PV08	Impala
8PV09	Warbler
8PV10	Guild
8PV11	Kinetic
8PV12	Behold
8PV13	Orb
8PV14	Sport
8PV15	Utopia
8PV16	True
8PV17	Galore
8PV18	Parsley
8PV19	Dare
8PV20	Branzino
8PV21	Network
8PV22	Standard
8PV23	Salamander
8PV24	Oscillate

Milaner - Geiger Textile

Ancillary
55” wide
56% wool, 10% acrylic
10% alpaca, 10% cotton
8% nylon, 6% rayon

17101	Linen
17102	Flax
17103	Bark
17104	Deep Navy
17105	Charcoal
17106	Medium Grey
17107	Ash
17108	Crimson

Panno di Dolce - Geiger Textile

Ancillary
55” wide
65% wool
20% nylon
15% alpaca

1AV01	Fog
1AV02	Dune
1AV03	Trench
1AV04	Flannel
1AV05	Charcoal
1AV06	Umber
1AV07	Deep Navy
1AV08	Graphite
1AV09	Orange
1AV10	Pink
1AV11	Deep Red
1AV12	Bright Green
1AV13	Cerulean Blue
1AV14	Deep Cerulean Blue

Pristina - Geiger Textile

Ancillary
55” wide
37% wool
25% viscose
17% acrylic
15% cotton
6% polyester
PFOA-Free stain resistant

1JC01	Dove
1JC02	Goldstone
1JC03	Daybreak
1JC04	Pumice
1JC05	Cappuccino
1JC06	Gunmetal
1JC07	Caspian
1JC08	Café Noir

Resca - Geiger Textile

Ancillary
56” wide
75% wool
10% linen
8% nylon
7% alpaca

1AW01	Fog
1AW02	Dune
1AW03	Trench
1AW04	Flannel
1AW05	Umber
1AW06	Bordeaux

Rowan - Maharam

Ancillary/Seating
77% wool
12% nylon
6% acrylic
5% linen

5K301	Kingdom
5K302	Northern
5K303	Rabbit
5K304	Elephant
5K305	Furrow
5K306	Heirloom
5K307	Appear
5K308	Repose
5K309	Blackcurrant
5K310	Courage
5K311	Bordeaux
5K312	Cherish
5K313	Brickfield
5K314	Hibiscus
5K315	Carnelian
5K316	Cinnabar
5K317	Toasted
5K318	Revea
5K319	Cortado
5K320	Medallion
5K321	Polenta

Price category 7 continued on next page

- Maharam textiles are on assigned lead times A.
- Fabric numbers are listed as Herman Miller fabric number/Maharam fabric number.

Price Category 7
continued

Rowan *continued*	
5K322	Prized
5K323	Travertine
5K324	Companion
5K325	Library
5K326	Fable
5K327	Pixie
5K328	Arboretum
5K329	Ease
5K330	Sapling
5K331	Cottonwood
5K332	Scout
5K333	Valleyside
5K334	Ornament
5K335	Zucchini
5K336	Ethereal
5K337	Springtide
5K338	Traverse
5K339	Untold
5K340	Flowing
5K341	Laguna
5K342	Cerulean
5K343	Soundscape
5K344	Message
5K345	Freefall
5K346	Musical
5K347	Puzzle
5K348	Operatic
5K349	Daydream
5K350	Shale
5K351	Forward
5K352	Anthracite

Vesture - Geiger Textile	
Ancillary	
55” wide	
40% wool, 25% polyester	
20% silk, 15% nylon	
PFOA-Free stain resistant finish	
21701	Ashen
21702	Dark Blush
21703	Dusk
21704	Medium Gray
21705	Twilight

Wool Epinglé - Geiger Textile	
Ancillary	
54” wide	
100% wool	
16201	Swiss Red
16202	Orange
16203	Light Chestnut Brown
16204	Light Burnt Umber
16205	Pale Native Umber
16207	Grey
16208	Natier Blue
16209	Deep Cerulean Blue
16210	Anthracite
16211	Natural Native Umber
16212	Chestnut Brown

Wool Tweed - Geiger Textile	
Ancillary	
54” wide	
80% wool, 20% nylon	
16601	Trench
16602	Pewter
16603	Ruby
16604	Blue Gray
16605	Navy
16606	Umber
16607	Charcoal

Price Category 8

Breeze - Maharam	
Workspaces	
120” wide	
65% FR polyester	
35% post-consumer recycled	
FR polyester	
1QG06/283817-006	Meteorite
1QG09/283817-009	Serum

Luce - Maharam	
Ancillary/Seating	
59” wide	
75% post-consumer recycled wool	
20% polyester	
5% nylon	
ZLU01/466566-001	Brioche
ZLU02/466566-002	Blanched
ZLU03/466566-003	Relic
ZLU04/466566-004	Sinter
ZLU05/466566-005	Scoria
ZLU06/466566-006	Austere
ZLU07/466566-007	Pigment
ZLU08/466566-008	Alkali
ZLU09/466566-009	Tidal
ZLU10/466566-010	Imbue
ZLU11/466566-011	Reservoir
ZLU12/466566-012	Brine
ZLU13/466566-013	Undertone
ZLU14/466566-014	Prelude
ZLU15/466566-015	Submerge
ZLU16/466566-016	Cypress
ZLU17/466566-017	Awash
ZLU18/466566-018	Adriatic
ZLU19/466566-019	Province
ZLU20/466566-020	Virescent
ZLU21/466566-021	Nettle
ZLU22/466566-022	Agrarian
ZLU23/466566-023	Serpentine
ZLU24/466566-024	Laurel
ZLU25/466566-025	Clarion
ZLU26/466566-026	Gooseberry
ZLU27/466566-027	Swelter
ZLU28/466566-028	Etruscan
ZLU29/466566-029	Coulis
ZLU30/466566-030	Rubescent

Luce *continued*	
ZLU31/466566-031	Akoya
ZLU32/466566-032	Radiant
ZLU33/466566-033	Regent
ZLU34/466566-034	Spectral
ZLU35/466566-035	Thistle

Tempo – Maharam	
Ancillary	
55” wide	
100% polyester	
Polyester backing	
26S01/466589-001	Chert
26S02/466589-002	Grandstand
26S03/466589-003	Restful
26S04/466589-004	Battleship
26S05/466589-005	Lavender
26S06/466589-006	Dockside
26S07/466589-007	Swimming
26S08/466589-008	Ambience
26S09/466589-009	Adornment
26S10/466589-010	Remedy
26S11/466589-011	Fang
26S12/466589-012	Inshore
26S13/466589-013	Camouflage
26S14/466589-014	Mesclun
26S15/466589-015	Farmland
26S16/466589-016	Tadpole
26S17/466589-017	Purr
26S18/466589-018	Snowman
26S19/466589-019	Beehive
26S20/466589-020	Gazelle
26S21/466589-021	Shiitake
26S22/466589-022	Flaxseed
26S23/466589-023	Crawdad
26S24/466589-024	Flowery
26S25/466589-025	Burgundy
26S26/466589-026	Rangoli
26S27/466589-027	Petunia
26S28/466589-028	Campsite

Price category 8 continued on next page

- Maharam textiles are on assigned lead times A.
- Fabric numbers are listed as Herman Miller fabric number/Maharam fabric number.

Price Category 8
continued

Whim	
Ancillary	
54” wide	
34% viscose	
33% acrylic	
17% wool	
8% polyester	
9DA01	Warm White
9DA02	Rye
9DA03	Mustard Seed
9DA04	Terra Cotta
9DA05	Fir
9DA06	Navy
9DA07	Pewter

Price Category 9

Alpaca Mohair - Geiger Textile	
Ancillary	
54” wide	
63% alpaca	
21% cotton, 16% polyester	
18510	Dune
18511	Trench
18512	Vicuna
18570	Sepia
18571	Umber
18580	Fog
18581	Flannel
18582	Charcoal

Campana – Maharam	
Ancillary/Seating	
59” wide	
85% wool	
15% nylon	
ZC001/466571-001	Viverine
ZC002/466571-002	Lithograph
ZC003/466571-003	Moonscape
ZC004/466571-004	Brevity
ZC005/466571-005	Linear
ZC006/466571-006	Hinterland
ZC007/466571-007	Mural
ZC008/466571-008	Sloe
ZC009/466571-009	Interstellar
ZC010/466571-010	Mythology
ZC011/466571-011	Scintillate
ZC012/466571-012	Succession
ZC013/466571-013	Visceral
ZC014/466571-014	Hemisphere
ZC015/466571-015	Troposhpere
ZC016/466571-016	Skye
ZC017/466571-017	Seaward
ZC018/466571-018	Nemorous
ZC019/466571-019	Allegory
ZC020/466571-020	Olivine
ZC021/466571-021	Reptilian
ZC022/466571-022	Basil
ZC023/466571-023	Fanleaf
ZC024/466571-024	Beachgrass
ZC025/466571-025	Hayfield

Campana *continued*	
ZC026/466571-026	Freesia
ZC027/466571-027	Rhodium
ZC028/466571-028	Undercoat
ZC029/466571-029	Airbrush
ZC030/466571-030	Shellfish
ZC031/466571-031	Mojave
ZC032/466571-032	Renaissance
ZC033/466571-033	Decoupage
ZC034/466571-034	Outback
ZC035/466571-035	Millipede

Gemma – Maharam	
Ancillary/Seating	
55” wide	
85% wool	
15% nylon	
ZGE01/466568-001	Crinoline
ZGE02/466568-002	Angelic
ZGE03/466568-003	Savory
ZGE04/466568-004	Honeycomb
ZGE05/466568-005	Gilded
ZGE06/466568-006	Paddleboat
ZGE07/466568-007	Stagecoach
ZGE08/466568-008	Waterbuck
ZGE09/466568-009	Earnest
ZGE10/466568-010	Auric
ZGE11/466568-011	Carmine
ZGE12/466568-012	Serape
ZGE13/466568-013	Ferric
ZGE14/466568-014	Canyon
ZGE15/466568-015	Alembic
ZGE16/466568-016	Patio
ZGE17/466568-017	Sorrel
ZGE18/466568-018	Root

Gemma *continued*	
ZGE19/466568-019	Mansion
ZGE20/466568-020	Buff
ZGE21/466568-021	Starch
ZGE22/466568-022	Dawn
ZGE23/466568-023	Countryside
ZGE24/466568-024	Dewy
ZGE25/466568-025	Reliquary
ZGE26/466568-026	Deluge
ZGE27/466568-027	Overlay
ZGE28/466568-028	Electron
ZGE29/466568-029	Sheath
ZGE30/466568-030	Quietude
ZGE31/466568-031	Jargon
ZGE32/466568-032	Powder
ZGE33/466568-033	Tide
ZGE34/466568-034	Outwash
ZGE35/466568-035	Enamored
ZGE36/466568-036	Smitten
ZGE37/466568-037	Revere
ZGE38/466568-038	Mangosteen
ZGE39/466568-039	Allium
ZGE40/466568-040	Immense
ZGE41/466568-041	Chamber
ZGE42/466568-042	Cosmos
ZGE43/466568-043	Inkling
ZGE44/466568-044	Rainwater
ZGE45/466568-045	Shade
ZGE46/466568-046	Pendant
ZGE47/466568-047	Axial
ZGE48/466568-048	Fervent
ZGE49/466568-049	Legacy
ZGE50/466568-050	Caliber
ZGE51/466568-051	Temple
ZGE52/466568-052	Evenfall

Price category 9 continued on next page

- Maharam textiles are on assigned lead times A.
- Fabric numbers are listed as Herman Miller fabric number/Maharam fabric number.

Price Category 9
continued

Jasper - Maharam	
Ancillary/Seating	
53” wide	
55% wool	
27% solution-dyed nylon	
18% cotton	
ZJA01/466563-001	Thrill
ZJA02/466563-002	Anise
ZJA03/466563-003	Grapefruit
ZJA04/466563-004	Lifeguard
ZJA05/466563-005	Heartfelt
ZJA06/466563-006	Corsage
ZJA07/466563-007	Earthenware
ZJA08/466563-008	Bear
ZJA09/466563-009	Firelight
ZJA10/466563-010	Dreamcatcher
ZJA11/466563-011	Bobcat
ZJA12/466563-012	Glacial
ZJA13/466563-013	Vaporize
ZJA14/466563-014	Trapdoor
ZJA15/466563-015	Halcyon
ZJA16/466563-016	Observatory
ZJA17/466563-017	Steamboat
ZJA18/466563-018	Aquathlon
ZJA19/466563-019	Cloudless
ZJA20/466563-020	Briny
ZJA21/466563-021	Magical
ZJA22/466563-022	Picnic
ZJA23/466563-023	Herbage
ZJA24/466563-024	Pasture
ZJA25/466563-025	Courtyard
ZJA26/466563-026	Leapfrog

Leather	
Ancillary/Seating	
approx. 50 sq. ft. per hide	
100% leather	
2101	Ivory
2109	Black *
2110	Smoke
2111	Graphite
2112	Khaki
2113	Rattan
2114	Truffle
2115	Alpine
2116	Haze
2117	Sable Grey
2118	Dark Mineral **
2119	Dark Carbon ***
2120	Cranberry
2121	Deep Sea

* Armpad color available on Aeron® Chair, Graphite.
** Armpad color available on Aeron Chair, Mineral.
*** Armpad color available on Aeron Chair, Carbon.

Price Category 10

Bristol Leather - Geiger Textile	
Ancillary	
approx. 55 sq. ft. per hide	
100% leather	
5-507	Black
5-511	Putty
5-519	Hunter
5-520	White
5-521	Ivory
5-522	Parchment
5-537	Caribbean
5-546	Pumice
5-547	Smoke
5-548	Charcoal
5-549	Dark Shale
5-556	Downtown Grey
5-557	City Night
5-559	Ash Grey
5-563	Champagne
5-564	Chestnut Brown
5-565	Dark Sienna
5-566	Earthen
5-567	Desert
5-568	British Green
5-579	Paris Blue
5-583	Atlantic
5-592	Camel
5-594	Taupe
5-597	Pure *
5-598	Cream
5-600	Midnight Blue
5-603	Sangria
5-604	Swiss Red
5-605	Nordic Yellow
5-606	Sky Grey
5-608	Natural

* Color not available on Saiba Chair.

Firma – Maharam	
Ancillary/Seating	
55” wide	
78% wool	
22% nylon	
3KH01/466582-001	Wrath
3KH02/466582-002	Pantomime
3KH03/466582-003	Shaded
3KH04/466582-004	Prologue
3KH05/466582-005	Framework
3KH06/466582-006	Railroad
3KH07/466582-007	Grommet
3KH08/466582-008	Lunisolar
3KH09/466582-009	Snowpack
3KH10/466582-010	Coldsnap
3KH11/466582-011	Sealift
3KH12/466582-012	Brood
3KH13/466582-013	Intertidal
3KH14/466582-014	Confide
3KH15/466582-015	Secluded
3KH16/466582-016	Leisure
3KH17/466582-017	Portfolio
3KH18/466582-018	Strato
3KH19/466582-019	Fogbow
3KH20/466582-020	Snowcone
3KH21/466582-021	Kazoo
3KH22/466582-022	Esteem
3KH23/466582-023	Mackerel
3KH24/466582-024	Brooch
3KH25/466582-025	Caesious
3KH26/466582-026	Islet
3KH27/466582-027	Biosphere
3KH28/466582-028	Hilltop
3KH29/466582-029	Arboreal
3KH30/466582-030	Lineage
3KH31/466582-031	Comfrey
3KH32/466582-032	Circe
3KH33/466582-033	Ecosystem
3KH34/466582-034	Knack
3KH35/466582-035	Watt
3KH36/466582-036	Epiphany
3KH37/466582-037	Gamma
3KH38/466582-038	Taxicab
3KH39/466582-039	Varietal
3KH40/466582-040	Tale

Price category 10 continued on next page

- Maharam textiles are on assigned lead times A.
- Fabric numbers are listed as Herman Miller fabric number/Maharam fabric number.

Price Category 10
continued

Firma *continued*	
3KH41/466582-041	Elemental
3KH42/466582-042	Cuff
3KH43/466582-043	Emu
3KH44/466582-044	Tempeh
3KH45/466582-045	Tephra
3KH46/466582-046	Shellac
3KH47/466582-047	Emporium
3KH48/466582-048	Keratin
3KH49/466582-049	Camwood
3KH50/466582-050	Gloam
3KH51/466582-051	Novela
3KH52/466582-052	Fruitpunch
3KH53/466582-053	Decant
3KH54/466582-054	Milkshake
3KH55/466582-055	Metaphysic
3KH56/466582-056	Carafe
3KH57/466582-057	Voyager
3KH58/466582-058	Tenebrous
3KH59/466582-059	Subtext
3KH60/466582-060	Silent

Gemma Multi – Maharam	
Ancillary/Seating	
55” wide	
85% wool	
15% nylon	
ZGF01/466569-001	Andromeda
ZGF02/466569-002	Dappled
ZGF03/466569-003	Lyra
ZGF04/466569-004	Flaunt
ZGF05/466569-005	Celluloid
ZGF06/466569-006	Hydrozoa
ZGF07/466569-007	Firefly
ZGF08/466569-008	Pisces
ZGF09/466569-009	Strath
ZGF10/466569-010	Erosion
ZGF11/466569-011	Cabaret
ZGF12/466569-012	Candytuft
ZGF13/466569-013	Juice
ZGF14/466569-014	Fairground
ZGF15/466569-015	Copperplate
ZGF16/466569-016	Sunbird
ZGF17/466569-017	Cinematic
ZGF18/466569-018	Clairvoyant

Gemma Multi *continued*	
ZGF19/466569-019	Crocus
ZGF20/466569-020	Memoir
ZGF21/466569-021	Roulette
ZGF22/466569-022	Voltaic
ZGF23/466569-023	Compote
ZGF24/466569-024	Lambent
ZGF25/466569-025	Twister
ZGF26/466569-026	Chronicle
ZGF27/466569-027	Sidereal
ZGF28/466569-028	Tanzanite
ZGF29/466569-029	Crystalize
ZGF30/466569-030	Chromium
ZGF31/466569-031	Pallium
ZGF32/466569-032	Spectre
ZGF33/466569-033	Courgette
ZGF34/466569-034	Viper
ZGF35/466569-035	Sunlit
ZGF36/466569-036	Heavenly
ZGF37/466569-037	Vernal
ZGF38/466569-038	Cress
ZGF39/466569-039	Limn
ZGF40/466569-040	Horseradish
ZGF41/466569-041	Shandy
ZGF42/466569-042	Granary
ZGF43/466569-043	Percolate
ZGF44/466569-044	Motor
ZGF45/466569-045	Unicorn
ZGF46/466569-046	Lobster
ZGF47/466569-047	Rhododendron
ZGF48/466569-048	Taffy
ZGF49/466569-049	Rishi
ZGF50/466569-050	Backcountry
ZGF51/466569-051	Buckthorn
ZGF52/466569-052	Coniferous
ZGF53/466569-053	Delphic
ZGF54/466569-054	Hieroglyph
ZGF55/466569-055	Eiderdown
ZGF56/466569-056	Sandbar
ZGF57/466569-057	Tanager

Gemma Multi Reverse – Maharam	
Ancillary/Seating	
55” wide	
85% wool	
15% nylon	
ZGF58/466569-101	Andromeda Reverse
ZGF59/466569-102	Dappled Reverse
ZGF60/466569-103	Lyra Reverse
ZGF61/466569-104	Flaunt Reverse
ZGF62/466569-105	Celluloid Reverse
ZGF63/466569-106	Hydrozoa Reverse
ZGF64/466569-107	Firefly Reverse
ZGF65/466569-108	Pisces Reverse
ZGF66/466569-109	Strath Reverse
ZGF67/466569-110	Erosion Reverse
ZGF68/466569-111	Cabaret Reverse
ZGF69/466569-112	Candytuft Reverse
ZGF70/466569-113	Juice Reverse
ZGF71/466569-114	Fairground Reverse
ZGF72/466569-115	Copperplate Reverse
ZGF73/466569-116	Sunbird Reverse
ZGF74/466569-117	Cinematic Reverse
ZGF75/466569-118	Clairvoyant Reverse
ZGF76/466569-119	Crocus Reverse
ZGF77/466569-120	Memoir Reverse

Gemma Multi Reverse *continued*	
ZGF78/466569-121	Roulette Reverse
ZGF79/466569-122	Voltaic Reverse
ZGF80/466569-123	Compote Reverse
ZGF81/466569-124	Lambent Reverse
ZGF82/466569-125	Twister Reverse
ZGF83/466569-126	Chronicle Reverse
ZGF84/466569-127	Sidereal Reverse
ZGF85/466569-128	Tanzanite Reverse
ZGF86/466569-129	Crystalize Reverse
ZGF87/466569-130	Chromium Reverse
ZGF88/466569-131	Pallium Reverse
ZGF89/466569-132	Spectre Reverse
ZGF90/466569-133	Courgette Reverse
ZGF91/466569-134	Viper Reverse
ZGF92/466569-135	Sunlit Reverse
ZGF93/466569-136	Heavenly Reverse
ZGF94/466569-137	Vernal Reverse
ZGF95/466569-138	Cress Reverse
ZGF96/466569-139	Limn Reverse
ZGF97/466569-140	Horseradish Reverse
ZGF98/466569-141	Shandy Reverse
ZGF99/466569-142	Granary Reverse

- Maharam textiles are on assigned lead times A.
- Fabric numbers are listed as Herman Miller fabric number/Maharam fabric number.

Price category 10 continued on next page

Price Category 10
continued

Gemma Multi Reverse *continued*	
ZGFA0/466569-143	Percolate Reverse
ZGFA1/466569-144	Motor Reverse
ZGFA2/466569-145	Unicorn Reverse
ZGFA3/466569-146	Lobster Reverse
ZGFA4/466569-147	Rhododendron Reverse
ZGFA5/466569-148	Taffy Reverse
ZGFA6/466569-149	Rishi Reverse
ZGFA7/466569-150	Backcountry Reverse
ZGFA8/466569-151	Buckthorn Reverse
ZGFA9/466569-152	Coniferous Reverse
ZGFB0/466569-153	Delphic Reverse
ZGFB1/466569-154	Hieroglyph Reverse
ZGFB2/466569-155	Eiderdown Reverse
ZGFB3/466569-157	Tanager Reverse

Petra - Maharam	
Ancillary/Seating	
55” wide	
70% wool	
19% linen	
11% nylon	
ZP401/466580-001	Hieroglyph
ZP402/466580-002	Interior
ZP403/466580-003	Samovar
ZP404/466580-004	Calcite
ZP405/466580-005	Silversmith
ZP406/466580-006	Rivet
ZP407/466580-007	Carpolite
ZP408/466580-008	Bonbon

Petra *continued*	
ZP409/466580-009	Dreamy
ZP410/466580-010	Bejewel
ZP411/466580-011	Sashimi
ZP412/466580-012	Spirula
ZP413/466580-013	Chalet
ZP414/466580-014	Reindeer
ZP415/466580-015	Nostalgia
ZP416/466580-016	Trove
ZP417/466580-017	Narcissus
ZP418/466580-018	Yurt
ZP419/466580-019	Congee
ZP420/466580-020	Genepy
ZP421/466580-021	Herbaceous
ZP422/466580-022	Paddock
ZP423/466580-023	Precious
ZP424/466580-024	Biome
ZP425/466580-025	Tinted
ZP426/466580-026	Pelagic
ZP427/466580-027	Bluebill
ZP428/466580-028	Chicory
ZP429/466580-029	Eaglet
ZP430/466580-030	Permafrost
ZP431/466580-031	Atlantic
ZP432/466580-032	Airstream
ZP433/466580-033	Debonair

Superweave - Maharam	
Ancillary	
54” wide	
75% polyester	
25% cotton	
Z2203/466241-005	Sienna
Z2204/466241-002	Ochre
Z2207/466241-004	Marine
Z2208/466241-003	Olive
Z2220/466241-001	Orange and Pink

Price Category 11

Felix - Maharam	
Ancillary/Seating	
85% wool	
15% nylon	
3BS01	Angular
3BS02	Shark
3BS03	Easy
3BS04	Cue
3BS05	Rye
3BS06	Champion
3BS07	Between
3BS08	Propose
3BS09	Rising
3BS10	Tile
3BS11	Place
3BS12	Kernel
3BS13	Pinnacle
3BS14	Darling
3BS15	Seasonal
3BS16	Shipmate
3BS17	Jump
3BS18	Geyser
3BS19	Team

Prone Leather - Maharam	
Ancillary	
approx. 50 sq. ft. per hide	
100% leather	
protective top coat	
1NX01/700020-001	Lotus
1NX02/700020-002	Timbre
1NX03/700020-003	Essence
1NX04/700020-004	Script
1NX05/700020-005	Gambit
1NX06/700020-006	Obsidian
1NX07/700020-007	Sail
1NX09/700020-009	Vine
1NX10/700020-010	Yarrow
1NX13/700020-013	Balsa
1NX14/700020-014	Shore
1NX15/700020-015	Bricolage
1NX17/700020-017	Ledge
1NX19/700020-019	Mantra
1NX20/700020-020	Java
1NX21/700020-021	Lute
1NX22/700020-022	Glow
1NX23/700020-023	Hickory

Tenera Leather - Geiger Textile	
Ancillary	
approx. 55 sq. ft. per hide	
100% leather	
17501	Cement
17502	Marzipan
17504	Raw Sienna
17505	Maple
17508	Cranberry
17510	Dark Chocolate
17511	Black
17512	Carbon
17513	Sapphire

- Maharam textiles are on assigned lead times A.
- Fabric numbers are listed as Herman Miller fabric number/Maharam fabric number.

Price Category 12-13

No fabrics available at this time.

Price Category 14

Lanalux - Maharam	
Ancillary	
54” wide	
100% wool	
Z1375/466240-005	Black/White
Z1378/466240-006	Olive/Black
Z1380/466240-001	Natural
Z1383/466240-002	Umber
Z1384/466240-007	Natural/Black
Z1386/466240-003	Orange
Z1387/466240-004	Crimson

Price Category A

No fabrics available at this time.

Price Category B

Medium – Maharam	
Ancillary/Seating/Workspaces	
54” wide	
100% polyester	
VM01/463490-001	Raven
VM02/463490-002	Smoke
VM03/463490-003	Alloy
VM04/463490-004	Flax
VM07/463490-007	Espresso
VM14/463490-014	Laser
VM16/463490-016	Port
VM22/463490-022	Marina
VM29/463490-029	Pistachio
VM32/463490-032	Prospect
VM36/463490-036	Delight
VM39/463490-039	Nautical
VM40/463490-040	Pool
VM44/463490-044	Washed
VM45/463490-045	Sculpture
VM46/463490-046	Thatched
VM47/463490-047	Hike
VM48/463490-048	Tangle
VM49/463490-049	Pacific
VM50/463490-050	Cosmic
VM51/463490-051	Cascade
VM52/463490-052	Blackberry
VM53/463490-053	Nasturtium

Messenger – Maharam	
Ancillary/Seating/Workspaces	
54” wide	
78% post-industrial recycled polyester	
15% polyester, 7% nylon	
TI07/458640-007	Shadow
TI08/458640-008	Bayou *
TI24/458640-024	Poppy
TI25/458640-025	Mao
TI29/458640-029	Onyx *
TI31/458640-031	Cloud *
TI38/458640-038	Depth *
TI40/458640-040	Nile *
TI41/458640-041	Azure *

Price category B continued on next page

- Maharam textiles are on assigned lead times A.
- Fabric numbers are listed as Herman Miller fabric number/Maharam fabric number.

Price Category B
continued

Messenger *continued*	
TI45/458640-045	Cactus *
TI46/458640-046	Ice * **
TI48/458640-048	Neon
TI50/458640-050	Hydrangea
TI53/458640-053	Tangelo
TI54/458640-054	Lumine *
TI58/458640-058	Snow ** ***
TI60/458640-060	Peridot
TI61/458640-061	Capri *
TI62/458640-062	Ultramarine
TI63/458640-063	Squall
TI66/458640-066	Cassis
TI67/458640-067	Aster
TI69/458640-069	Cherry
TI70/458640-070	Vibrant
TI71/458640-071	Satsuma *
TI72/458640-072	Maize
TI76/458640-076	Fossil
TI77/458640-077	Ash
TI78/458640-078	Tusk
TI79/458640-079	Oyster **
TI81/458640-081	Husk
TI84/458640-084	Robust
TI85/458640-085	Beyond
TI86/458640-086	Voyage *
TI87/458640-087	Everglade
TI89/458640-089	Blanch ***
TI90/458640-090	Longspur
TI91/458640-091	Vireo
TI92/458640-092	Dipper
TI93/458640-093	Gale
TI94/458640-094	Hunter
TI95/458640-095	Lime
TI96/458640-096	Apple
TI97/458640-097	Krill
TI98/458640-098	Catalyst

* Colors available on 20-day lead time.
** Colors not available on Eames Molded Fiberglass and Molded Plastic Side Chairs.
*** Colors not available on Valor Seating.

Price Category C

Manner - Maharam	
Ancillary/Seating/Workspaces	
54” wide	
65% post-industrial	
recycled polyester	
35% post-consumer	
recycled polyester	
Z2701/466177-001	Magic
Z2702/466177-002	Carob
Z2703/466177-003	Porpoise
Z2704/466177-004	Flint
Z2705/466177-005	Hush *
Z2706/466177-006	Nuance
Z2711/466177-011	Ember
Z2712/466177-012	Wagon
Z2713/466177-013	Ablaze
Z2714/466177-014	Peel
Z2716/466177-016	Butterscotch
Z2717/466177-017	Harvest
Z2720/466177-020	Parakeet
Z2722/466177-022	Aquatic
Z2723/466177-023	Cottage
Z2724/466177-024	Dahlia
Z2725/466177-025	Vivid
Z2726/466177-026	Basin
Z2727/466177-027	Schooner
Z2728/466177-028	Slope
Z2729/466177-029	Silverpoint
Z2730/466177-030	Lattice
Z2731/466177-031	Smoky
Z2732/466177-032	Magnetic
Z2733/466177-033	Woad
Z2734/466177-034	Resolute
Z2735/466177-035	Cruise
Z2736/466177-036	Atmospheric
Z2737/466177-037	Cloudburst
Z2738/466177-038	Tidewater
Z2739/466177-039	Firth
Z2740/466177-040	Oceanside
Z2741/466177-041	Grandeur
Z2742/466177-042	Comfort
Z2743/466177-043	Dill
Z2744/466177-044	Poplar
Z2745/466177-045	Citronella
Z2746/466177-046	Passerine

Manner *continued*	
Z2747/466177-047	Southwest
Z2748/466177-048	Roseate
Z2749/466177-049	Charisma
Z2750/466177-050	Siltstone
Z2751/466177-051	Kimono
Z2752/466177-052	Valiant
Z2753/466177-053	Baroness

* Color not available on Eames Aluminum Group, Executive Chairs, Upholstered Molded Plywood Chairs, and Sofa Compact.

Merit - Maharam	
Ancillary/Seating	
54” wide	
76% post-industrial	
recycled polyester	
24% polyester	
PFOA-Free stain resistant	
88Z01/466444-001	Trickle
88Z02/466444-002	Beluga
88Z03/466444-003	Gunmetal
88Z04/466444-004	Blackout
88Z05/466444-005	Superior
88Z06/466444-006	Ocean
88Z07/466444-007	Highborn
88Z08/466444-008	Immersed
88Z09/466444-009	Rainfall
88Z10/466444-010	Blizzard
88Z11/466444-011	Poolside
88Z12/466444-012	Steel
88Z13/466444-013	Zircon
88Z14/466444-014	Ripple
88Z15/466444-015	Aegean
88Z16/466444-016	Armada
88Z17/466444-017	Hedera
88Z18/466444-018	Rainforest
88Z19/466444-019	Gator
88Z20/466444-020	Vineyard
88Z21/466444-021	Pine
88Z22/466444-022	Kiwi
88Z23/466444-023	Kookaburra

Merit *continued*	
88Z24/466444-024	Bellini
88Z25/466444-025	Sunflower
88Z26/466444-026	Sandstorm
88Z27/466444-027	Mudder
88Z28/466444-028	Lynx
88Z29/466444-029	Farro
88Z30/466444-030	Manila
88Z31/466444-031	Starfish
88Z32/466444-032	Brass
88Z33/466444-033	Arrow
88Z34/466444-034	Gelato
88Z35/466444-035	Nectarine
88Z36/466444-036	Macaron
88Z37/466444-037	Alert
88Z38/466444-038	Goji
88Z39/466444-039	Cabernet
88Z40/466444-040	Eggplant
88Z41/466444-041	Hawk
88Z42/466444-042	Stag
88Z43/466444-043	Overcast

Metric – Maharam	
Ancillary/Seating/Workspaces	
54” wide	
51% post-industrial	
recycled polyester	
49% polyester	
Z302/466014-002	Fog
Z303/466014-003	Fleece
Z312/466014-012	Cardinal
Z313/466014-013	Lava
Z318/466014-018	Pollen
Z320/466014-020	Alligator
Z323/466014-023	Tar
Z324/466014-024	Anchor
Z326/466014-026	Admiral
Z327/466014-027	Seaport
Z328/466014-028	Scuba
Z329/466014-029	Skate
Z330/466014-030	Hopscotch
Z331/466014-031	Film
Z332/466014-032	Whale
Z333/466014-033	Downpour
Z334/466014-034	Midday

Price category C continued on next page

- Maharam textiles are on assigned lead times A.
- Fabric numbers are listed as Herman Miller fabric number/Maharam fabric number.

Price Category C
continued

Metric *continued*	
Z335/466014-035	Talisman
Z336/466014-036	Hedgerow
Z337/466014-037	Snorkel
Z338/466014-038	Highway
Z339/466014-039	Canary
Z340/466014-040	Sunny
Z341/466014-041	Aztec
Z342/466014-042	Fruit
Z343/466014-043	Galah
Z344/466014-044	Kiln
Z345/466014-045	Moth

Murmur - Maharam	
Ancillary/Seating	
55” wide	
100% polyester	
PFOA-Free stain resistant	
8EY01/466446-001	Gust
8EY02/466446-002	Harmonica
8EY03/466446-003	Canopy
8EY04/466446-004	Dim
8EY05/466446-005	Peppercorn
8EY06/466446-006	Cauldron
8EY07/466446-007	Conquer
8EY08/466446-008	Rapids
8EY09/466446-009	Seawater
8EY10/466446-010	Baby
8EY11/466446-011	Elderberry
8EY12/466446-012	Iceberg
8EY13/466446-013	Tallgrass
8EY14/466446-014	Underground
8EY15/466446-015	Biome
8EY16/466446-016	Cask
8EY17/466446-017	Argan
8EY18/466446-018	Sundown
8EY19/466446-019	Ignite
8EY20/466446-020	Sultry
8EY21/466446-021	Sangria

Price Category D

Bluff - Maharam	
Ancillary/Seating	
54” wide	
100% polyurethane	
Ink-resistant protective top coat	
Polyester backing	
8I801/466489-001	Loom
8I802/466489-002	Helm
8I803/466489-003	Cruller
8I804/466489-004	Folklore
8I805/466489-005	Beguile
8I806/466489-006	Sherpa
8I807/466489-007	Teleport
8I808/466489-008	Annex
8I809/466489-009	Lorimer
8I810/466489-010	Cinema
8I811/466489-011	Zip
8I812/466489-012	Coach
8I813/466489-013	Supernova
8I814/466489-014	Pirate
8I815/466489-015	Academy
8I816/466489-016	Disco
8I817/466489-017	Equator
8I818/466489-018	Brink
8I819/466489-019	Scene
8I820/466489-020	Petrichor
8I821/466489-021	Exotic
8I822/466489-022	Fauna
8I823/466489-023	Calabash
8I824/466489-024	Fuscous
8I825/466489-025	Wildling
8I826/466489-026	Blitz
8I827/466489-027	Allspice
8I828/466489-028	Lumos
8I829/466489-029	Pilot
8I830/466489-030	Jukebox
8I831/466489-031	Dugout
8I832/466489-032	Claret
8I833/466489-033	Flamenco

Mode – Maharam	
Ancillary/Seating/Workspaces	
54” wide	
80% post-consumer recycled polyester	
20% polyester	
PFOA-Free stain resistant finish	
ZMD01/466337-001	Stroll
ZMD02/466337-002	Intaglio
ZMD03/466337-003	Ominous
ZMD04/466337-004	Machine
ZMD05/466337-005	Talus
ZMD06/466337-006	Marsh
ZMD07/466337-007	Hollow
ZMD08/466337-008	Sycamore
ZMD09/466337-009	Clavicle
ZMD10/466337-010	Billygoat
ZMD11/466337-011	Spindle
ZMD12/466337-012	Lemon
ZMD13/466337-013	Oxeye
ZMD14/466337-014	Henge
ZMD15/466337-015	Goldenrod
ZMD16/466337-016	Cottontail
ZMD17/466337-017	Lioness
ZMD18/466337-018	Oriole
ZMD19/466337-019	Rust
ZMD20/466337-020	Carotene
ZMD21/466337-021	Blush
ZMD22/466337-022	Vermilion
ZMD23/466337-023	Alder
ZMD24/466337-024	Kermes
ZMD25/466337-025	Barberry
ZMD26/466337-026	Petal
ZMD27/466337-027	Valley
ZMD28/466337-028	Odyssey
ZMD29/466337-029	Ballpoint
ZMD30/466337-030	Toile
ZMD31/466337-031	Paradise

Mode *continued*	
ZMD32/466337-032	Angelfish
ZMD33/466337-033	Denim
ZMD34/466337-034	Crush
ZMD35/466337-035	Jetty
ZMD36/466337-036	Saltwater
ZMD37/466337-037	Mallard
ZMD38/466337-038	Celtic
ZMD39/466337-039	Eucalyptus
ZMD40/466337-040	Bonsai
ZMD41/466337-041	Sassafras
ZMD42/466337-042	Yucca
ZMD43/466337-043	Lichen

Spiral - Maharam	
Workspaces	
66” wide	
100% polyester	
ZS301/901882-001	Chalk
ZS303/901882-003	Wheat
ZS304/901882-004	Mica
ZS305/901882-005	Pavement
ZS306/901882-006	Graphite

- Maharam textiles are on assigned lead times A.
- Fabric numbers are listed as Herman Miller fabric number/Maharam fabric number.

Price Category E

Article – Maharam	
Ancillary/Seating	
54” wide	
100% vinyl	
ZAT08/458600-008	Marina
ZAT13/458600-013	Flume
ZAT14/458600-014	Storm
ZAT15/458600-015	Toast
ZAT19/458600-019	Fleece
ZAT22/458600-022	Stone
ZAT26/458600-026	Mercury
ZAT29/458600-029	Bluegrass
ZAT31/458600-031	Truffle
ZAT32/458600-032	Gravel
ZAT33/458600-033	Value
ZAT34/458600-034	Tint
ZAT35/458600-035	Snowflake
ZAT36/458600-036	Chalice
ZAT37/458600-037	Trail
ZAT38/458600-038	Pyramid
ZAT39/458600-039	Desert
ZAT40/458600-040	Lei
ZAT41/458600-041	Rouge
ZAT42/458600-042	Karma
ZAT43/458600-043	Opal
ZAT44/458600-044	Periwinkle
ZAT45/458600-045	Vampire
ZAT46/458600-046	Surf
ZAT47/458600-047	Plumage

Flock - Maharam	
Workspaces	
63” wide	
100% polyester	
ZF301/901892-001	Calm
ZF302/901892-002	Course
ZF303/901892-003	Highlight
ZF305/901892-005	Poppy
ZF306/901892-006	Briefcase
ZF307/901892-007	Monkstrap
ZF308/901892-008	Quag
ZF309/901892-009	Pistachio
ZF310/901892-010	Froth
ZF311/901892-011	Celadon
ZF312/901892-012	Highsea
ZF313/901892-013	China
ZF314/901892-014	Victorian
ZF315/901892-015	Commander
ZF316/901892-016	Raven
ZF317/901892-017	Aluminum

Micro – Maharam	
Ancillary	
54” wide	
100% vinyl	
ZMB01/466099-001	Muslin
ZMB04/466099-004	Basalt
ZMB06/466099-006	Phantom
ZMB07/466099-007	Depth
ZMB08/466099-008	Cottage
ZMB09/466099-009	Hunter
ZMB11/466099-011	Tomatillo
ZMB12/466099-012	Brew
ZMB14/466099-014	Tang
ZMB15/466099-015	Risk

Parallel — Maharam	
Workspaces	
66” wide	
100% recycled polyester	
TT03/901180-003	Fog
TT22/901180-022	Sterling
TT23/901180-023	Linen
TT24/901180-024	Pea
TT27/901180-027	Boulder
TT28/901180-028	Stream
TT29/901180-029	Shiitake
TT32/901180-032	Brandy
TT33/901180-033	Crater
TT36/901180-036	Quail

Price Category F

Apt – Maharam	
Ancillary/Seating	
54” wide	
100% polyurethane/silicone	
Ink-resistant protective top coat	
Polyester backing	
82T12/466392-012	Iris
82T13/466392-013	Nocturnal
82T14/466392-014	Fluid
82T15/466392-015	Eden
82T16/466392-016	Galactic
82T17/466392-017	Shoreline
82T18/466392-018	Jade
82T19/466392-019	Garden
82T20/466392-020	Botanic
82T21/466392-021	Chartreuse
82T23/466392-023	Lyric
82T24/466392-024	Turmeric
82T25/466392-025	Bengal
82T26/466392-026	Core
82T27/466392-027	Mantle
82T28/466392-028	Sorbet
82T32/466392-032	Oak
82T33/466392-033	Castle
82T34/466392-034	Follow
82T35/466392-035	Elixir
82T36/466392-036	Charm
82T37/466392-037	Descend
82T38/466392-009	Sketch
82T39/466392-010	Glacier
82T40/466392-031	Fortress
82T41/466392-030	Lotus
82T42/466392-001	Coconut
82T43/466392-011	Cobblestone
82T44/466392-029	Bloom
82T45/466392-022	Crepe
82T46/466392-006	Hickory
82T47/466392-007	Constellation
82T48/466392-008	Labyrinth
82T49/466392-002	Vibe
82T50/466392-003	Stampede
82T51/466392-004	Lumber
82T52/466392-005	Gingerbread

Price category F continued on next page

- Maharam textiles are on assigned lead times A.
- Fabric numbers are listed as Herman Miller fabric number/Maharam fabric number.

Price Category F
continued

Brindle - Maharam
Ancillary/Seating
58” wide
100% polyester
PFOA-free stain resistant
Acrylic backing

87101/466418-001	Calico
87102/466418-002	Mauve
87103/466418-003	Torch
87104/466418-004	Burnt
87105/466418-005	Barn
87106/466418-006	Pharaoh
87107/466418-007	Sandbur
87108/466418-008	Jungle
87109/466418-009	Inland
87110/466418-009	Seagrass
87111/466418-009	Watercolor
87112/466418-009	Aquarium
87113/466418-009	Drill

Chime - Maharam
Ancillary
54” wide
100% vinyl

V9M3/465350-003	Morel
V9MB/465350-011	Tranquil
V9MJ/465350-020	Slate
V9MV/465350-031	Verve
V9MW/465350-032	Understory

Conduit - Maharam
Ancillary/Seating
58” wide
100% polyester
PFOA-free stain resistant
Acrylic backing

87Z01/466428-001	Space
87Z02/466428-002	Syrup
87Z03/466428-003	Nimbus
87Z04/466428-004	Greystone
87Z05/466428-005	Fawn
87Z06/466428-006	Ghost
87Z07/466428-007	Caribbean
87Z08/466428-008	Canal
87Z09/466428-009	Bonfire

Emit – Maharam
Workspaces
54” wide
55% post-industrial recycled polyester
45% post-consumer recycled polyester
PFOA-free stain resistant

8EX01/466378-001	Wed
8EX02/466378-002	Zebra
8EX03/466378-003	Chiffon
8EX05/466378-005	Nectar
8EX06/466378-006	Elk
8EX08/466378-008	Goldenrod
8EX09/466378-009	Beached
8EX10/466378-010	Samba
8EX11/466378-011	Nest
8EX14/466378-014	Groove
8EX17/466378-017	Haiku
8EX18/466378-018	Bluefin
8EX19/466378-019	Flow
8EX20/466378-020	Xenon
8EX21/466378-021	Artem
8EX22/466378-022	Zen
8EX25/466378-025	Limeade

Instill – Maharam
Ancillary/Seating
54” wide
100% polyurethane
Ink-resistant protective top coat
Polyester backing

74M01/466351-001	Page
74M02/466351-002	Limestone
74M03/466351-003	Bobwhite
74M04/466351-004	Loafer
74M07/466351-007	Shaker
74M08/466351-008	Doe
74M09/466351-009	Ride
74M10/466351-010	Squire
74M11/466351-011	Tannin
74M12/466351-012	Vitis
74M14/466351-014	Quail
74M15/466351-015	Brittanic
74M16/466351-016	Narwhal
74M18/466351-018	Stowaway
74M19/466351-019	Koala
74M20/466351-020	Dorsal
74M21/466351-021	Stealth
74M22/466351-022	Mosey
74M23/466351-023	Beachfront
74M24/466351-024	Discovery
74M25/466351-025	Grasp
74M26/466351-026	Arboreous
74M27/466351-027	Yearling
74M28/466351-028	Allele
74M29/466351-029	Eager
74M30/466351-030	Rise
74M31/466351-031	Latte
74M32/466351-032	Compose
74M33/466351-033	Furrow
74M34/466351-034	Tenor
74M35/466351-035	Annatto
74M36/466351-036	Together
74M37/466351-037	Intention
74M38/466351-038	Overnight
74M39/466351-039	Icecap
74M40/466351-040	Metamorphic
74M41/466351-041	Anthracite

Keen - Maharam
Ancillary/Seating
54” wide
61% polyester
39% polyolefin
PFOA-Free stain resistant
Acrylic backing

89N01/466433-001	Gaur
89N02/466433-002	Lock
89N03/466433-003	Elk
89N04/466433-004	Oatmeal
89N05/466433-005	Lakefront
89N06/466433-006	Argent
89N07/466433-007	Coyote
89N08/466433-008	Eventide
89N09/466433-009	Canal
89N10/466433-010	Rosemary
89N11/466433-011	Herb
89N12/466433-012	Ruby
89N13/466433-013	Loganberry

Ledger – Maharam
Ancillary/Seating
54” wide
100% polyurethane

V9G1/463770-001	001
V9G2/463770-002	002
V9G3/463770-003	003
V9G4/463770-004	004
V9GG/463770-017	017
V9GQ/463770-025	025
V9GS/463770-026	026
V9GU/463770-028	028
V9GV/463770-029	029
V9GW/463770-030	030
V9GX/463770-031	031
V9GY/463770-032	032
V9G18/463770-042	042
V9G19/463770-043	043
V9G20/463770-044	044
V9G21/463770-045	045
V9G22/463770-046	046

Price category F continued on next page

- Maharam textiles are on assigned lead times A.
- Fabric numbers are listed as Herman Miller fabric number/Maharam fabric number.

Price Category F
continued

Loop - Maharam	
Ancillary/Seating	
57” wide	
48% post-industrial recycled polyester	
26% polyester	
26% post-consumer recycled polyester	
PFOA-Free stain resistant Acrylic Backing	
ZLL01/466469-001	Opossum
ZLL02/466469-002	Foundation
ZLL03/466469-003	Naval
ZLL04/466469-004	Buoyant
ZLL05/466469-005	Mockingbird
ZLL06/466469-006	Dynasty
ZLL07/466469-007	Zori
ZLL08/466469-008	Wildfire
ZLL09/466469-009	Floral
ZLL10/466469-010	Penguin

Multiply - Maharam	
Ancillary/Seating	
58” wide	
57% post-consumer recycled polyester	
43% post-industrial recycled polyester	
PFOA-Free stain resistant Acrylic Backing	
82A01/466341-001	Winter
82A02/466341-002	Encore
82A03/466341-003	Swing
82A04/466341-004	Contrast
82A05/466341-005	Sterling
82A06/466341-006	Daze
82A07/466341-007	Sway
82A08/466341-008	Sailor
82A09/466341-009	Mystique
82A10/466341-010	Deep
82A11/466341-011	Craft
82A12/466341-012	Town
82A13/466341-013	Limit
82A14/466341-014	Tamale

Pitch - Maharam	
Ancillary	
54” wide	
100% vinyl	
ZPC04/466186-004	Pollen
ZPC07/466186-007	Apple
ZPC11/466186-011	Voyage
ZPC12/466186-012	Turquoise
ZPC14/466186-014	Inlet
ZPC15/466186-015	Captain
ZPC16/466186-016	Aura
ZPC17/466186-017	Coastal
ZPC18/466186-018	Fog
ZPC19/466186-019	Coal
ZPC21/466186-021	Mulberry
ZPC24/466186-024	Flame
ZPC26/466186-026	Tumbleweed
ZPC29/466186-029	Subtle
ZPC30/466186-030	Buff

Pepper - Maharam	
Ancillary/Seating	
58” wide	
49% polyester	
41% post-industrial recycled polyester	
10% post-consumer recycled polyester	
PFOA-Free stain resistant Acrylic Backing	
8LW01/466486-001	Dojo
8LW02/466486-002	Marengo
8LW03/466486-003	Harlequin
8LW04/466486-004	Pavlova
8LW06/466486-006	Achiote
8LW07/466486-007	Essence
8LW08/466486-008	Genome
8LW09/466486-009	Myriad
8LW10/466486-010	Terrarium

Scuba - Maharam	
Ancillary	
54” wide	
100% polyurethane	
V9B1/464930-001	Vanilla
V9B5/464930-005	Chinchilla
V9B6/464930-006	Mahogany
V9B7/464930-007	Jet
V9B8/464930-008	Charcoal
V9B9/464930-009	Dolphin
V9BA/464930-010	Drizzle
V9BC/464930-012	Conifer
V9BD/464930-013	Bottle
V9BF/464930-015	Tourmaline
V9BG/464930-016	Sapphire
V9BH/464930-017	Electric
V9BL/464930-020	Cabernet
V9BM/464930-021	Brick
V9BN/464930-022	Coral
V9BP/464930-023	Autumn

Strum - Maharam	
Ancillary/Seating	
54” wide	
100% polyurethane with silane-based antimicrobial	
Z3301/466122-001	Overcast
Z3302/466122-002	Ridge
Z3304/466122-004	Pigeon
Z3307/466122-007	Bur
Z3308/466122-008	Abalone
Z3312/466122-012	Lemongrass

Price Category G

Compound - Maharam	
Ancillary/Seating	
54” wide	
100% polyurethane with silane-based antimicrobial	
ZC201/466196-001	Quartz
ZC203/466196-003	Weathered
ZC204/466196-004	Cliff
ZC205/466196-005	Espresso
ZC206/466196-006	Smolder
ZC207/466196-007	Blaze
ZC208/466196-008	Mandarin
ZC209/466196-009	Maple
ZC210/466196-010	Perennial
ZC211/466196-011	Mountainside
ZC212/466196-012	Tundra
ZC213/466196-013	Manatee
ZC214/466196-014	Marine
ZC215/466196-015	Twilight
ZC216/466196-016	Shelter
ZC217/466196-017	Vessel
ZC218/466196-018	Smoke
ZC219/466196-019	Fog

Fluent Crypton - Maharam	
Ancillary	
54” wide	
52% polyester	
31% post-industrial recycled polyester	
17% post-consumer recycled polyester	
ZFC01/466073-001	Lynx
ZFC12/466073-012	Bayou
ZFC13/466073-013	Bottle
ZFC14/466073-014	Cadet
ZFC22/466073-022	Turf
ZFC24/466073-024	Steady

Price category G continued on next page

- Maharam textiles are on assigned lead times A.
- Fabric numbers are listed as Herman Miller fabric number/Maharam fabric number.

Price Category G
continued

Fold - Maharam	
Seating	
54” wide	
100% polyurethane	
Polyester backing	
ZF101/466292-001	Jet
ZF102/466292-002	Chalk
ZF103/466292-003	Smoke
ZF105/466292-005	Fatigue
ZF106/466292-006	Splash
ZF107/466292-007	Apple
ZF108/466292-008	Moss
ZF110/466292-010	Midnight

Gild - Maharam	
Ancillary/Seating	
54” wide	
100% non-phthalate vinyl	
Ink-resistant protective top coat	
Polyester backing	
8AR01/466432-005	Grapevine
8AR02/466432-009	Frosting
8AR03/466432-007	Smokey
8AR04/466432-003	Skylight
8AR05/466432-011	Sandstone
8AR06/466432-004	Hurricane
8AR07/466432-002	Wreath
8AR08/466432-001	Rainforest
8AR09/466432-012	Fudge
8AR10/466432-010	Lantern
8AR11/466432-006	Planet
8AR12/466432-008	Reflection

Pare – Maharam	
Ancillary/Seating	
54” wide	
52% wool	
26% polyester	
22% nylon	
PFOA-free stain resistant finish	
ZPR01/466359-001	Polaris
ZPR04/466359-004	Fresco
ZPR06/466359-006	Wink
ZPR07/466359-007	Concord
ZPR08/466359-008	Strawberry
ZPR09/466359-009	Solar
ZPR10/466359-010	Amulet
ZPR11/466359-011	Zest
ZPR12/466359-012	Elmwood
ZPR13/466359-013	Thyme
ZPR17/466359-017	Blueberry

Runner - Maharam	
Ancillary/Seating	
54” wide	
57% post-industrial	
recycled polyester	
43% post-consumer	
recycled polyester	
ZRF01/466108-001	Bluff
ZRF03/466108-003	Grove
ZRF04/466108-004	Starboard
ZRF05/466108-005	Plot
ZRF06/466108-006	Carousel

Sudden – Maharam	
Ancillary	
54” wide	
100% polyurethane	
ZSD02/463000-002	002
ZSD03/463000-003	003
ZSD05/463000-005	005
ZSD06/463000-006	006
ZSD07/463000-007	007
ZSD08/463000-008	008
ZSD09/463000-009	009
ZSD10/463000-010	010
ZSD11/463000-011	011
ZSD13/463000-013	013
ZSD15/463000-015	015
ZSD16/463000-016	016
ZSD17/463000-017	017
ZSD18/463000-018	018
ZSD19/463000-019	019
ZSD20/463000-020	020
ZSD24/463000-024	024
ZSD27/463000-027	027
ZSD36/463000-036	036

Price Category H

Anagram - Maharam	
Ancillary	
54” wide	
42% cotton	
32% polyester	
26% nylon	
ZAN01/466067-001	Quarry
ZAN02/466067-002	Hush
ZAN03/466067-003	Electric
ZAN04/466067-004	Range
ZAN05/466067-005	Settle

Circles — Maharam	
Ancillary/Seating	
55” wide	
70% cotton	
30% polyester	
ZT01/458310-001	Khaki
ZT02/458310-002	Fatigue
ZT03/458310-003	Document
ZT04/458310-004	Engine

Dot Pattern — Maharam	
Ancillary/Seating	
55” wide	
71% cotton	
29% polyester	
ZK01/458300-001	Document
ZK02/458300-002	Taupe
ZK04/458300-004	Red
ZK05/458300-005	Navy

Mechanism – Maharam	
Ancillary	
54” wide	
100% polyester	
ZMC01/465952-001	Mercury
ZMC10/465952-010	Pearl
ZMC11/465952-011	Bronze
ZMC13/465952-013	Titanium
ZMC15/465952-015	Tangerine
ZMC17/465952-017	Sprout

Price category H continued on next page

- Maharam textiles are on assigned lead times A.
- Fabric numbers are listed as Herman Miller fabric number/Maharam fabric number.

Price Category H
continued

Mister – Maharam
Ancillary
54” wide
67% solution-dyed acrylic
33% solution-dyed polyester

ZMG01/466178-001	Breeze
ZMG04/466178-004	Enliven
ZMG05/466178-005	Notice
ZMG06/466178-006	Azurite

Regatta – Maharam
Ancillary
54” wide
65% solution-dyed acrylic
35% solution-dyed polyester

ZRT01/466189-001	Drift
ZRT02/466189-002	Parasol
ZRT04/466189-004	Swell

Small Dot Pattern — Maharam
Ancillary/Seating
55” wide
71% cotton
29% polyester

ZL01/458320-001	Document
ZL02/458320-002	Sand
ZL03/458320-003	Khaki
ZL04/458320-004	Taupe
ZL05/458320-005	Charcoal
ZL06/458320-006	Document Reverse
ZL07/458320-007	Red
ZL08/458320-008	Yellow
ZL09/458320-009	Green

Price Category I

Colorwheel – Maharam
Ancillary
54” wide
62% cotton
38% solution-dyed
post-industrial recycled nylon

ZCW02/466163-002	Pumice
ZCW03/466163-003	Viridian
ZCW06/466163-006	Charcoal
ZCW07/466163-007	Carbon

Cursive – Maharam
Ancillary/Seating
54” wide
67% solution-dyed acrylic
33% solution-dyed polyester
PFOA-Free stain resistant

7CW01/466335-001	Fast
7CW03/466335-003	Beachcomb
7CW05/466335-005	Swift
7CW07/466335-007	Inkwell
7CW08/466335-008	Rubber

Passage - Maharam
Ancillary
54” wide
100% polyester

59P01/466614-001	Mirage
59P02/466614-002	Poolside
59P03/466614-003	Cascade
59P04/466614-004	Lacinato
59P05/466614-005	Overstory
59P06/466614-006	Celadon
59P07/466614-007	Echo
59P08/466614-008	Bentonite
59P09/466614-009	Buttercup
59P10/466614-010	Maple
59P11/466614-011	Blossom
59P12/466614-012	Cloudberry
59P13/466614-013	Contessa
59P14/466614-014	Claret
59P15/466614-015	Katana

Study - Maharam
Ancillary/Seating
54” wide
73% solution-dyed acrylic
27% solution-dyed polyester

ZSY01/466269-001	001
ZSY02/466269-002	002
ZSY03/466269-003	003
ZSY04/466269-004	004
ZSY05/466269-005	005

Tracery – Maharam
Ancillary
52” wide
34% solution-dyed nylon
26% wool
21% polyester
19% cotton
acrylic backing
PFOA-free stain resistant finish

ZT501/466372-001	Birch
ZT502/466372-002	Sterling
ZT503/466372-003	Flint
ZT504/466372-004	Indigo
ZT505/466372-005	Arctic
ZT506/466372-006	Kelp
ZT507/466372-007	Melon
ZT508/466372-008	Poppy
ZT509/466372-009	Copper
ZT510/466372-010	Papaya
ZT511/466372-011	Sepia

Price Category J

Fluted Silk – Maharam
Ancillary
54” wide
85% silk
8% cotton
7% acrylic

ZFK02/465982-002	Tarnish
ZFK05/465982-005	Calm
ZFK06/465982-006	Flaxen
ZFK10/465982-010	Noticed
ZFK11/465982-011	Moody
ZFK12/465982-012	Constant
ZFK13/465982-013	Seed
ZFK14/465982-014	Eternal
ZFK15/465982-015	Honor
ZFK17/465982-017	Cranach
ZFK20/465982-020	Discreet

Mikado – Maharam
Ancillary
54” wide
79% cotton
21% polyester

V1901/459330-001	Umber
V1902/459330-002	Orange
V1903/459330-003	Ultramarine
V1904/459330-004	Pink
V1905/459330-005	Sepia

Price category J continued on next page

- Maharam textiles are on assigned lead times A.
- Fabric numbers are listed as Herman Miller fabric number/Maharam fabric number.

Price Category J
continued

Trestle - Maharam	
Ancillary	
54” wide	
36% acrylic	
32% wool	
23% cotton	
9% polyester	
3WG01/466613-001	Loam
3WG02/466613-002	Rift
3WG03/466613-003	Fuse
3WG04/466613-004	Cumulus
3WG05/466613-005	Strand
3WG06/466613-006	Pomelo
3WG07/466613-007	Tawny
3WG08/466613-008	Sunstone
3WG09/466613-009	Kindling
3WG10/466613-010	Sidecar
3WG11/466613-011	Beak
3WG12/466613-012	Ficus
3WG13/466613-013	Hinge
3WG14/466613-014	Bluefish
3WG15/466613-015	Oblivion

Price Category K

Checker – Maharam	
Ancillary	
55” wide	
77% cotton	
23% polyester	
V1201/459830-001	Emerald Light/ Ivory
V1204/459830-004	Ultramarine/ Emerald
V1206/459830-007	Sienna Dark/ Khaki
V1207/459830-008	Black/White
V1209/459830-009	Ultramarine/ Turquoise
V1210/459830-010	Blue Gray/ Emerald
V1211/459830-011	Olive/Pink
V1212/459830-012	Magenta/ Orange
V1213/459830-013	Crimson/ Orange

Checker Split – Maharam	
Ancillary	
55” wide	
77% cotton	
23% polyester	
V1301/460290-01	Black/White

Double Triangles – Maharam	
Ancillary	
55” wide	
77% cotton	
23% polyester	
V1401/459840-001	Black/White

Facets – Maharam	
Ancillary	
55” wide	
77% cotton	
23% polyester	
V1501/459850-001	Black/White

Isa – Maharam	
Ancillary	
59” wide	
85% wool	
15% nylon	
VKZ01/466624-001	Bashful
VKZ02/466624-002	Median
VKZ03/466624-003	Observe
VKZ04/466624-004	Plains
VKZ05/466624-005	Drawn
VKZ06/466624-006	Connect
VKZ07/466624-007	Fennel
VKZ08/466624-008	Skyward
VKZ09/466624-009	Oceanic
VKZ10/466624-010	Neptune
VKZ11/466624-011	Sprint
VKZ12/466624-012	Ledge
VKZ13/466624-013	Surround
VKZ14/466624-014	Foretell
VKZ15/466624-015	Lory
VKZ16/466624-016	Dear
VKZ17/466624-017	Foxtrot
VKZ18/466624-018	Sincere
VKZ19/466624-019	Begonia

Optik – Maharam	
Ancillary	
55” wide	
76% cotton	
24% polyester	
ZQP01/459960-001	Sun Yellow/ Orange
ZQP06/459960-006	White/Black

Unisol – Maharam	
Ancillary	
55” wide	
61% rayon	
21% polyester	
18% cotton	
ZUN01/461160-001	Black/ White

Price Category L

Exaggerated Plaid – Maharam	
Ancillary	
59” wide	
100% wool	
ZEP01/466039-001	Glen
ZEP02/466039-002	Brae
ZEP03/466039-003	Firth

Geometri – Maharam	
Ancillary	
55” wide	
77% cotton	
23% polyester	
ZGM02/459970-002	Red/ Carmine
ZGM03/459970-003	Lilac/Blue
ZGM04/459970-004	White/ Black

Jacobs Coat – Maharam	
Ancillary	
54” wide	
92% wool	
8% nylon	
V1601/462270-001	Multicolored Bright *
V1602/462270-002	Multicolored Neutral

* Color available on Girard Color Wheel Ottoman.

Millerstripe – Maharam	
Ancillary	
54” wide	
92% wool	
8% rayon	
V1701/462250-001	Multicolored Bright
V1702/462250-002	Multicolored Neutral

Price category L continued on next page

- Maharam textiles are on assigned lead times A.
- Fabric numbers are listed as Herman Miller fabric number/Maharam fabric number.

Price Category L
continued

Minicheck - Maharam	
Seating	
55” wide	
78% cotton	
22% polyester	
PFOA-Free stain resistant finish	
ZMK01/466268-001	Black/ White

Monk’s Wool – Maharam	
Ancillary	
54” wide	
96% wool	
4% nylon	
ZMW01/457301-001	Tusk
ZMW03/457301-003	Slate
ZMW05/457301-005	Cherokee

Pebble Wool – Maharam	
Ancillary	
54” wide	
90% wool	
10% nylon	
ZPW01/457401-001	Birch
ZPW10/457401-010	Cottage
ZPW13/457401-013	Eggshell
ZPW14/457401-014	Whisper
ZPW15/457401-015	Ceramic
ZPW16/457401-016	Seamist
ZPW17/457401-017	Armory
ZPW18/457401-018	Glaze
ZPW19/457401-019	Cordial

Pebble Wool Multi – Maharam	
Ancillary	
54” wide	
97% wool	
3% nylon	
ZPM01/461200-001	Fawn
ZPM02/461200-002	Slate
ZPM05/461200-005	Moss
ZPM06/461200-006	Tabasco

Quatrefoil – Maharam	
Ancillary	
54” wide	
75% cotton	
25% nylon	
V2101/459350-001	Silver
V2102/459350-002	Pink
V2103/459350-003	Crimson
V2104/459350-004	Emerald
V2105/459350-005	Violet

Repeat Classic Stripe – Maharam	
Ancillary	
55” wide	
47% cotton	
27% rayon	
26% polyester	
ZRS01/462170-001	Inca
ZRS02/462170-002	Pistachio
ZRS03/462170-003	Poppy
ZRS04/462170-004	Cadet
ZRS05/462170-005	Peacock

Repeat Dot Ring – Maharam	
Ancillary	
55” wide	
75% cotton	
25% polyester	
ZRR01/462150-001	Gold
ZRR04/462150-004	Pink
ZRR05/462150-005	Coral
ZRR07/462150-007	Gold Reverse
ZRR10/462150-010	Pink Reverse
ZRR11/462150-011	Coral Reverse

Stripes - Maharam	
Ancillary	
56” wide	
92% wool	
8% nylon	
ZSP01/463980-001	001
ZSP02/463980-002	002
ZSP03/463980-003	003
ZSP04/463980-004	004
ZSP05/463980-005	005
ZSP06/463980-006	006
ZSP07/463980-007	007
ZSP08/463980-008	008
ZSP09/463980-009	009
ZSP10/463980-010	010

Toostripe – Maharam	
Ancillary	
54” wide	
92% wool	
8% nylon	
V2201/462260-001	Orange Dark/ Crimson Dark
V2202/462260-002	Black/ Raw Umber
V2203/462260-003	Ochre Dark/ Sienna

Price Category M

Fruit - Maharam	
Seating	
54” wide	
55% cotton	
32% nylon	
13% post-consumer recycled polyester	
PFOA-Free stain resistant finish	
Acrylic backing	
ZF201/466262-001	Opal
ZF202/466262-002	Lime
ZF203/466262-003	Olive
ZF204/466262-004	Sky
ZF207/466262-007	Russet

Names – Maharam	
Ancillary	
55” wide	
73% cotton	
27% polyester	
V1801/462510-001	Crimson On White
V1802/462510-002	Ultramarine On White
V1803/462510-003	Black On White

Price category M continued on next page

- Maharam textiles are on assigned lead times A.
- Fabric numbers are listed as Herman Miller fabric number/Maharam fabric number.

Price Category M
continued

Ottoman Stripe – Maharam	
Ancillary	
58” wide	
92% wool	
8% nylon	
ZQN01/466142-001	Brass
ZQN02/466142-002	Cocoa
ZQN03/466142-003	Dusk
ZQN04/466142-004	Pistachio
ZQN05/466142-005	Apricot

Pressed Plaid – Maharam	
Ancillary	
54” wide	
100% wool	
T1101/466181-001	001
T1102/466181-002	002
T1103/466181-003	003
T1104/466181-004	004
T1105/466181-005	005
T1106/466181-006	006

Wool Striae – Maharam	
Ancillary	
54” wide	
100% wool	
T1201/466184-001	001
T1202/466184-002	002
T1203/466184-003	003
T1204/466184-004	004
T1205/466184-005	005
T1206/466184-006	006
T1207/466184-007	007

Price Category N

Alpaca Epinglé - Maharam	
Ancillary	
55” wide	
100% alpaca	
ZAE01/465902-001	Vellum
ZAE02/465902-002	Slate
ZAE06/465902-006	Graphite
ZAE07/465902-007	Beignet

Alpaca Velvet - Maharam	
Ancillary	
54” wide	
100% alpaca	
ZAV01/465901-001	Alpine
ZAV06/465901-006	Charcoal
ZAV07/465901-007	Pewter
ZAV08/465901-008	Squash
ZAV09/465901-009	Wallaby
ZAV10/465901-010	Brunia

Bespoke Stripe - Maharam	
Ancillary	
56” wide	
100% wool	
ZBP01/463540-001	Navy
ZBP02/463540-002	Tobacco
ZBP03/463540-003	Chocolate
ZBP04/463540-004	Charcoal
ZBP05/463540-005	Black
ZBP06/463540-006	Pewter

Herringbone Stripe - Maharam	
Ancillary	
57” wide	
100% wool	
ZKP01/465945-001	Granite
ZKP02/465945-002	Espresso
ZKP03/465945-003	Graphite
ZKP04/465945-004	Indigo
ZKP05/465945-005	Raven

Point – Maharam	
Ancillary	
53” wide	
97% rayon	
3% nylon	
ZPT01/466090-001	Ivory and Ember
ZPT02/466090-002	Black and Coral
ZPT03/466090-003	Slate and Khaki
ZPT04/466090-004	Black and Cobalt
ZPT05/466090-005	Black and Khaki
ZPT06/466090-006	Slate and Mandarin
ZPT07/466090-007	Slate and Black
ZPT08/466090-008	Brick and Greige
ZPT09/466090-009	Gold and Black
ZPT10/466090-010	Greige and Peat
ZPT11/466090-011	Peat and Mandarin
ZPT12/466090-012	Crimson
ZPT13/466090-013	Mandarin
ZPT14/466090-014	Citrus
ZPT15/466090-015	Grass
ZPT16/466090-016	Cyan
ZPT17/466090-017	Cobalt

Wool Velvet - Maharam	
Ancillary	
54” wide	
100% wool	
ZWV01/466120-001	Plush
ZWV02/466120-002	Subdue
ZWV03/466120-003	Flagstone
ZWV04/466120-004	Nori
ZWV06/466120-006	Bridle
ZWV07/466120-007	Covert
ZWV08/466120-008	Gateway

Price Category O

Bavaria Stripe – Maharam	
Ancillary	
55” wide	
77% polyester	
23% cotton	
ZBS02/466161-002	Unique

- Maharam textiles are on assigned lead times. A
- Fabric numbers are listed as Herman Miller fabric number/Maharam fabric number.

Price Category P

Big Stripe – Maharam

Ancillary
55” wide
92% wool
8% nylon

ZBR01/466174-001	Peacock
ZBR02/466174-002	Spring
ZBR03/466174-003	Umber
ZBR04/466174-004	Poppy
ZBR05/466174-005	Cobalt

Epinglé Stripe - Maharam

Ancillary
50” wide
100% cotton

ZES01/466007-001	Caramel
ZES02/466007-002	Lead
ZES03/466007-003	Violet
ZES04/466007-004	Mahogany
ZES05/466007-005	Olive

Layers Garden – Maharam

Ancillary
52” wide
96% wool
3% nylon
1% polyester

ZLY01/465916-001	Ivy/Bronze
ZLY02/465916-002	Putty/ Turquoise
ZLY03/465916-003	Pewter/ White
ZLY04/465916-004	Chocolate/ Lilac
ZLY05/465916-005	Peat/Copper

Layers Park – Maharam

Ancillary
52” wide
95% wool
3% nylon
2% polyester

ZLP01/465918-001	Ash/Snow
ZLP02/465918-002	Mineral/Sky
ZLP03/465918-003	Poppy/ Melon
ZLP04/465918-004	Indigo/ White
ZLP05/465918-005	Earth/Cobalt

Layers Vineyard Large – Maharam

Ancillary
52” wide
95% wool
3% nylon
2% polyester

ZLV01/465921-001	Ivory/Onyx
ZLV02/465921-002	Slate/Azure
ZLV03/465921-003	Loden/Sky
ZLV04/465921-004	Taupe/ Crimson
ZLV05/465921-005	Black/ Mahogany

Layers Vineyard Small – Maharam

Ancillary
52” wide
92% wool
5% polyester
3% nylon

ZLS01/465920-001	Ochre/White
ZLS02/465920-002	Scarlet/ Peony
ZLS03/465920-003	Taupe/Violet
ZLS04/465920-004	Jade/ Turquoise
ZLS05/465920-005	Ginger/Rose

Mohair Supreme - Maharam

Ancillary
54” wide
100% mohair

ZMS02/451801-072	Stonehenge
ZMS06/451801-112	Slate *
ZMS07/451801-113	Rich Chocolate *
ZMS09/451801-126	Cayenne
ZMS10/451801-127	Cognac
ZMS12/451801-129	Peat *
ZMS15/451801-133	Abyss
ZMS16/451801-134	Intrigue
ZMS18/451801-136	Lupine *
ZMS28/451801-146	League
ZMS29/451801-147	Armory *
ZMS32/451801-150	Capiz
ZMS33/451801-151	Underneath
ZMS34/451801-152	Crescent
ZMS35/451801-153	National
ZMS36/451801-154	Rooftop
ZMS37/451801-155	Skewer
ZMS38/451801-156	Party
ZMS39/451801-157	Keepsake
ZMS40/451801-158	Travel
ZMS41/451801-159	Estate
ZMS42/451801-160	Grassland
ZMS43/451801-161	Limoncello
ZMS44/451801-162	Mango
ZMS45/451801-163	Doll
ZMS46/451801-164	Carousel
ZMS47/451801-165	Palette
ZMS48/451801-166	Brandy
ZMS49/451801-167	Aristocrat
ZMS50/451801-168	Soulmate
ZMS51/451801-169	Rosette
ZMS52/451801-170	Aviator
ZMS53/451801-171	Penny

* Colors available on Eames Lounge Chair and Ottoman.

Price Category Q

A Band Apart – Maharam

Ancillary
56” wide
75% polyester
25% cotton

ZAB01/466000-001	Unique

Brushed Camel – Maharam

Ancillary
58” wide
100% baby camel hair

ZBA01/465977-001	Albino
ZBA02/465977-002	Natural

Deconstructed Rose – Maharam

Ancillary
55” wide
65% polyester
32% cotton
3% rayon

ZDS01/466086-001	Golden
ZDS02/466086-002	Vivid
ZDS03/466086-003	Earthen

Massive Paisley – Maharam

Ancillary
57” wide
76% polyester
24% cotton

ZMV01/465915-001	Ash
ZMV03/465915-003	Cardinal
ZMV06/465915-006	Night

The Firm – Maharam

Ancillary
56” wide
75% polyester
25% cotton

ZTF03/465999-003	Unique

- Maharam textiles are on assigned lead times. A
- Fabric numbers are listed as Herman Miller fabric number/Maharam fabric number.

Price Category R

Borders – Maharam
Ancillary
53” wide
98% wool
2% polyester
ZBB01/466082-001 Natural
ZBB02/466082-002 Greige
ZBB03/466082-003 Charcoal
ZBB04/466082-004 Walnut

Stow Leather - Maharam
Ancillary
approx. 50 sq. ft. per hide
100% leather
protective top coat
ZSV01/700014-001 Opera
ZSV02/700014-002 Japonica
ZSV03/700014-003 Masquerade
ZSV04/700014-004 Laguna
ZSV05/700014-005 Jettison
ZSV06/700014-006 Razor
ZSV07/700014-007 Holiday
ZSV08/700014-008 Patchouli
ZSV09/700014-009 Macrame
ZSV10/700014-010 Grace
ZSV11/700014-011 Seraphim
ZSV12/700014-012 Ricotta
ZSV13/700014-013 Neroli
ZSV14/700014-014 Sultana
ZSV15/700014-015 Sundance
ZSV16/700014-016 Quince
ZSV17/700014-017 Babka
ZSV18/700014-018 Maitake
ZSV19/700014-019 Mercer
ZSV20/700014-020 Gaucho
ZSV21/700014-021 Chia
ZSV22/700014-022 Vanguard
ZSV23/700014-023 Zone
ZSV24/700014-024 Zeppelin

Stow Leather *continued*
ZSV25/700014-025 Clandestine
ZSV26/700014-026 Raven
ZSV27/700014-027 Cabana
ZSV28/700014-028 Rime
ZSV29/700014-029 Forsythia
ZSV30/700014-030 Panthera
ZSV31/700014-031 Dune
ZSV32/700014-032 Madera
ZSV33/700014-033 Russet
ZSV34/700014-034 Gala
ZSV35/700014-035 Heron

Price Category S

Bavaria – Maharam
Ancillary
55” wide
73% polyester
27% cotton
ZBV01/466162-001 Unique

Price Category T

All Grain Leather – Edelman	
Ancillary	
approx. 50 sq. ft. per hide	
100% full-grain Aniline-dye cowhide	
VB01/AG01	Pitch Brown
VB02/AG02	White
VB03/AG03	Cloud
VB04/AG04	Shadow
VB05/AG05	Black
VB06/AG06	Baked Bean
VB07/AG07	Mildew
VB08/AG08	Soot
VB09/AG09	Blue Jeans
VB10/AG10	Merlot
VB11/AG11	Nutmeg
VB12/AG12	Butter
VB13/AG13	Cherry
VB14/AG14	Burnt Orange
VB15/AG15	Whiskey
VB17/AG17	Raw Silk
VB18/AG18	Balsa
VB19/AG19	Naturale
VB21/AG21	Greige
VB22/AG27	Latte
VB23/AG28	Coral
VB24/AG29	Rose
VB25/AG30	Zinnia
VB26/AG31	Iris
VB27/AG32	Daffodil

Hours – Maharam
Ancillary
56” wide
95% wool
3% nylon
2% rayon
ZKR01/466092-001 Day
ZKR02/466092-002 Night

- Maharam textiles are on assigned lead times. A
- Fabric numbers are listed as Herman Miller fabric number/Maharam fabric number.

Price Category U

Layers Garden Double – Maharam	
Ancillary	
52” wide	
96% wool	
3% nylon	
1% polyester	
ZLD01/465917-001	Ash/ Quartz/ Grass
ZLD02/465917-002	Earth/ Chocolate/ Coral
ZLD03/465917-003	Black/ Navy/ Cobalt

Layers Park Double – Maharam	
Ancillary	
52” wide	
96% wool	
3% nylon	
1% polyester	
ZLB01/465919-001	Mineral/ Taupe/ Lemon
ZLB02/465919-002	Sienna/ Ginger/ Rose
ZLB03/465919-003	Black/ Peat/ Copper

Price Category V-W

No fabrics available at this time.

Price Category X

Eden – Maharam	
Ancillary	
56” wide	
83% polyester	
17% cotton	
ZED01/466258-001	001
ZED02/466258-002	002
ZED03/466258-003	003
ZED04/466258-004	004
ZED05/466258-005	005

Foliage – Maharam	
Ancillary	
56” wide	
75% polyester	
25% cotton	
ZFG02/466257-002	002
ZFG04/466257-004	004
ZFG05/466257-005	005

Price Category Y

Industry – Maharam	
Ancillary	
55” wide	
80% polyester	
20% cotton	
ZND01/466255-001	001

- Maharam textiles are on assigned lead times. A
- Fabric numbers are listed as Herman Miller fabric number/Maharam fabric number.

Price Category Z

Agency – Maharam	
Ancillary	
55” wide	
75% polyester	
25% cotton	
ZAG02/466001-002	002
ZAG04/466001-004	004
ZAG05/466001-005	005
ZAG06/466001-006	006
ZAG07/466001-007	007
ZAG08/466001-008	008

Price Category 10M

Pace Leather – Maharam	
Ancillary	
approx. 50 sq. ft. per hide	
100% leather	
ZPA01/700011-001	Whisper
ZPA02/700011-002	Shy
ZPA03/700011-003	Granite
ZPA04/700011-004	Misty
ZPA05/700011-005	Studio
ZPA06/700011-006	Throne
ZPA07/700011-007	Proper
ZPA08/700011-008	Huron
ZPA09/700011-009	Darkroom
ZPA10/700011-010	Bark
ZPA11/700011-011	Raspberry
ZPA12/700011-012	Sangria
ZPA13/700011-013	Admiral
ZPA14/700011-014	Juniper
ZPA15/700011-015	Regal
ZPA16/700011-016	Vapor
ZPA17/700011-017	Valley
ZPA18/700011-018	Bushel
ZPA19/700011-019	Heirloom
ZPA20/700011-020	Palomino
ZPA21/700011-021	Bamboo
ZPA22/700011-022	Saffron
ZPA23/700011-023	Tearose
ZPA24/700011-024	Canyon
ZPA25/700011-025	Bistro
ZPA26/700011-026	Toffee
ZPA27/700011-027	Rodeo
ZPA28/700011-028	Mudslide
ZPA29/700011-029	Greige
ZPA30/700011-030	Reflection
ZPA31/700011-031	Pure
ZPA32/700011-032	Desert
ZPA33/700011-033	Griffin
ZPA34/700011-034	Urbane
ZPA35/700011-035	Woodrose

- Maharam textiles are on assigned lead times. A
- Fabric numbers are listed as Herman Miller fabric number/Maharam fabric number.

For more information about our products and services or to see a list of dealers, please visit us at HermanMiller.com or call (800) 851 1196.

© 2025 Herman Miller, Inc., Zeeland, Michigan

Distribution Rights

Working together since 1956, Herman Miller and Vitra are the authentic sources of designs by Charles and Ray Eames, Alexander Girard, and George Nelson. All the designs shown in this book are protected by law. Herman Miller has obtained all rights to make and sell these designs. Also, Herman Miller holds exclusive worldwide manufacturing and distribution rights for these products with the following exceptions:

Charles and Ray Eames, George Nelson, and Alexander Girard—Worldwide distribution rights for furniture in all areas except Europe and the Middle East. For those areas, please contact Vitra.

Isamu Noguchi—Worldwide distribution rights for the Noguchi Rudder Table. Distribution rights for the Noguchi Table in North America and Central America only. For all other areas, please contact Vitra.

Magis—Exclusive distribution rights in the US and Canada. For all other areas, please contact Magis.

® HermanMiller, ●, 3D Intelligent, 8Z Pellicle, AO, Action Office, Aeron, Aside, Bubble Lamps, Canvas Office Landscape, Caper, Celle, Cosm, Co/Struc, Daisyone, Distil, Eames, Eco-Dematerialized, Embody, Envelop, Ethospace, Exclave, Fine-Tune, FlexFront, Flo, Formcoat, Formwork, Ground Cloth, Intent, Kinemat, Layout Studio, Lino, Live Unframed, Living Office, Maharam, Meridian, Mirra, Motia, Nelson, Pari, Pellicle, Perspectives, Plex, PostureFit, PostureFit SL, Public Office Landscape, Sayl, Setu, Striad, Tu, Ubi, Verus, Wishbone, Y-Tower and Zeph are among the registered trademarks of Herman Miller, Inc., and its owned subsidiaries.

™ About Face, AireWeave, Airia, Ambit, Asari Chair by HermanMiller, Backfit, Bubbletack, Burdick Group, Butterfly Back, Canvas Vista, Cellular Suspension, Commend, Compass, Connect, DOT, Duracare, Durawrap, EnhancedAccess, Everywhere, Flex-Edge, Flute, Harmonic, Headway, Herman Miller Select, Hopsak 2, Iota, Keyless Entry, Latitude, Logic Mini, Logic Power Access Solutions, Lyris, Lyris 2, Made-to-Measure Storage, Mora, Multiscrim, Nevi, OE1, OE1 Workspace Collection, Overlay, Pixelated Support, Pronta, Renew, Sense, Soft Pad, Stackable, Stackable Storage, Swoop, Thrive, Tone, TriFlex, Twist and Wireframe are among the trademarks of Herman Miller, Inc., and its owned subsidiaries.

SM Herman Miller Options is among the service marks of Herman Miller, Inc.

AAP™ is a trademark of Extron Electronics.

Alexander Girard® is a registered trademark of The Alexander Girard Estate.

Chemsurf® is a registered trademark of Wilsonart International.

Corian® is a registered trademark of E. I. du Pont de Nemours and Company Corporation.

Crypton® is a registered trademark of Crypton, Inc.

DACRON® is a registered trademark of INVISTA S.a r.l.

Danzer® is a registered trademark of Danzer Holding AG.

Decora® is a registered trademark of Leviton Manufacturing Co., Inc.

Edelman® Leather is a registered trademark of Edelman Leather, Inc.

Extron® is a registered trademark of RGB Systems, Inc.

FENIX NTM® is a registered trademark of Arpa Industriale S.p.A.

FLEXNET™ is a trademark of Milliken & Company.

Floor Saver Glide® is a registered trademark of Carpin Manufacturing, Inc.

Forest Stewardship Council® is a registered trademark of the Forest Stewardship Council A.C. (FSC). We are FSC® certified (FSC® C102895).

FSC® is a registered trademark of the Forest Stewardship Council A.C. (FSC).

Geiger® is a registered trademark, and Bumper™, Saiba™, and Ward Bennett™ are trademarks, of Geiger International.

Hang-It-All® is a registered trademark of Lucia Eames Demetrios, d.b.a. Eames Office.

Holophane® is a registered trademark of Holophane.

Ingeo™ is a trademark of Cargill Dow LLC.

iPad® and Mac mini® are registered trademarks of Apple Inc.

Leviton® is a registered trademark of Leviton Manufacturing Co., Inc.

LifeSize® is a registered trademark of LifeSize Communications, Inc.

Lisocore® is a registered trademark of Pyrus Panels GmbH.

Logitech G® is a registered trademark of Logitech International S.A.

Magis®, Bombo®, and Me Too® are registered trademarks of Magis S.p.A.

MicrobeCare™ is a trademark of Parasol Medical LLC.

Microsoft® and Natural® Keyboard are registered trademarks of Microsoft Corporation.

Noguchi® and the Noguchi table configuration (trade dress) are registered trademarks, and Rudder Table™ is a trademark, of The Isamu Noguchi Foundation and Garden Museum.

Place Textiles® is a registered trademark of Place Textiles.

Sunbrella® is a registered trademark of Glen Raven, Inc.

SuperSeat™ is a trademark of Dahti Seating, a division of ITW.

Valor™ is among the trademarks owned by Nemschoff, Inc.