Prices effective February 3, 2025

Published March 2025

Layout Studio®

Introduction	**page 2**
Layout Studio®	**3**
Performance Rail	
Infrastructure	5
Power & Wire Management	26
Surfaces	43
Screens	52
Storage	69
No Rail	
Infrastructure	82
Power & Wire Management	103
Surfaces	119
Screens	137
Hardware	168
Indices	**173**
By Name	173
By Number	175
Appendices	
20-Day or Less/Assigned Lead-Time Order Information	
Stain-to-Match Program	
Customer's Own Material Order Information-Workspaces	
Textiles Application Chart-Workspaces	
Textile Colors	

For the latest materials information, refer to the Materials pages on HermanMiller.com.

A Note on the Organization of This Book

There are a few signals that will help you understand the organization of this book. Once you know them, you should be able to find your way around easily.

Like a newspaper, this book is formatted with columns of text and illustrations that run vertically.

Information wraps from one column to the next and continues for as many pages as it needs to.

Black bars are clues.

A black bar at the top of a page signals the start of information about a product.

This information is divided into two sections, each signaled by a black bar. Product Information includes a description, additional notes, and dimensional drawings. Specification Information, which always begins at the top of a column, includes a series of steps. Each step represents a decision you need to make in order to complete your product number. Steps must be followed sequentially. The number of pages needed to complete information on a product varies; some will be complete in one page; others may fill three or four pages. Just continue going through the steps until you run into the next product, signaled by the black bar at the top of the page.

Black tabs running along the outside edge of the page help you locate what section you are in or what section you want to go to. You can thumb forwards or backwards to find a section; tabs and text appear on both sides of the page.

The additional pages in the back of the book include the appendices and indices. They are signaled by a long black bar running along the outside edge of the page.

The index is presented two ways.

The first index is in alphabetical order by product name. It can be helpful if you are new to the products and numbering scheme or if you are looking for a type of product, such as work chair or round table.

The second index is by product number. It lists, in alphanumeric order, the base product number, typically a five-digit number.

General Information

This book is effective February 3, 2025, subject to change without notice. Products may be purchased from authorized Herman Miller dealers who will quote prices upon request. For more information about our products and services or to see a list of dealers, visit www.HermanMiller.com.

All prices are list prices. Additional services, such as planning services, design, storage, and installation, are not included and must be added to these prices when the additional services are requested.

Illustrations, specifications, and prices are based on the latest information at the time of publication. The right is reserved to make changes at any time without notice in prices, fabrics, finishes, materials, specifications, and models, and also to discontinue models and finishes.

Dimensions shown in the drawings are engineering drawing dimensions rounded up to the nearest 1/8". Product is shipped set up or knocked down. Products that include "Shipped knocked down" in the description require some assembly. If this statement does not appear in the description, the product is shipped assembled.

Service problems are normally handled by a Herman Miller authorized dealer. Where this cannot be accomplished on a local level, service problems should be referred to the Customer Care Representative for your region, Herman Miller, Inc., Zeeland, Michigan 49464.

20-Day or Less/Assigned Lead-Time Shipments

All products and options in this price book not designated by an Assigned Program icon A will ship in **20 business days or less** after being acknowledged by Herman Miller.

Products and options designated by an A are on the assigned lead- time program and may ship in 20 days, less than 20 days, or more than 20 days from order acknowledgement.

Performance Rail

No Rail

Engage Leg, Desk End, Single, Performance Rail

GNLFEL
GNLFER

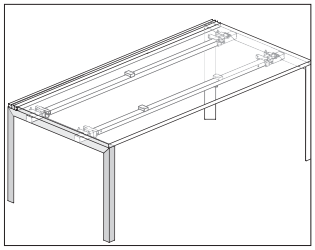

Product Information

Description

This single desk end leg provides support for an individual table or the end of a single-sided bench when using a performance rail. This fixed-height leg provides 1¾″ of leveling adjustment.

Notes

Size of leg must match depth of surface being supported.

Dimensions

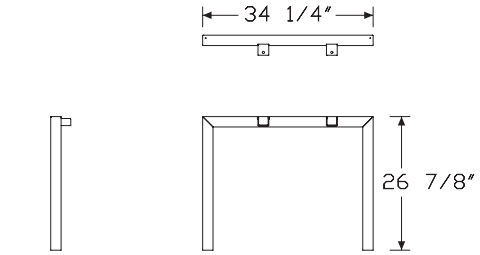

Engage Leg - Left

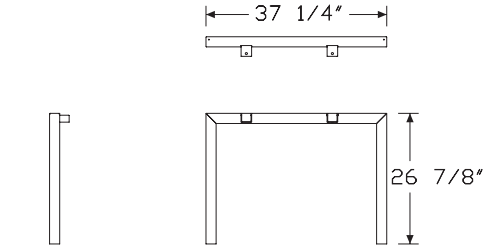

Engage Leg - Right

Specification Information

Step 1.

GN A

Step 2. Leg

LF fixed height A

Step 3. Application

EL.R left hand, for use with performance rail A
ER.R right hand, for use with performance rail A

Step 4. Size

24 24″ deep A
30 30″ deep A

Prices for Steps 1-4.

GNLFEL.R	**24**	$400
	30	$406
GNLFER.R	**24**	$400
	30	$406

Step 5. Leg Finish

Metallic Paint

613	silver (CP) A	+$0

Sand Texture Paint

91	white (CP) A	+$0
98	studio white (CP) A	+$0
BK	black A	+$0
G1	graphite (CP) A	+$0
UBK	ultra black (CP) A	+$0

Engage Leg, Desk End, Double GNLFEN

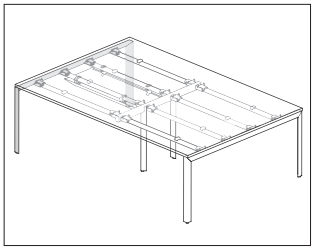

Product Information

Description

The double desk end leg provides support at either end of a back-to-back bench application, or a project table. This fixed height leg provides 1¾″ of leveling adjustment.

Notes

Size of the leg must match the combined depth of the 2 primary surfaces or 1 project table surface being supported.

Dimensions

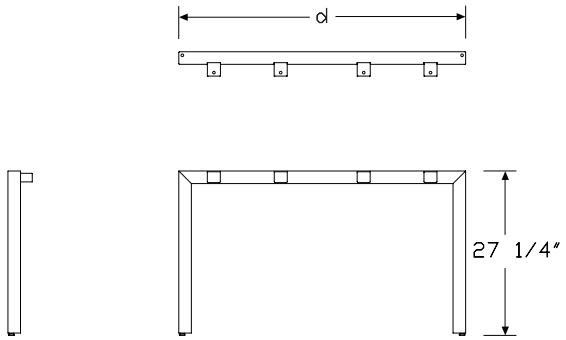

Specification Information

Step 1.

GN

Step 2. Leg Type

LF	fixed height

Step 3. Application

EN.	desk end double

Step 4. Depth

48	48″ deep
60	60″ deep
72	72″ deep

Prices for Steps 1-4.

GNLFEN.	**48**	$528
	60	$560
	72	$592

Step 5. Leg Finish

Metallic Paint

613	silver (CP)	+$0

Sand Texture Paint

91	white (CP)	+$0
98	studio white (CP)	+$0
BK	black	+$0
DB3	glacier	+$60
DN2	nightfall	+$60
DR1	canyon	+$60
G1	graphite (CP)	+$0
OLF	olive	+$60
UBK	ultra black (CP)	+$0

Engage Leg, Intermediate Desk, Performance Rail — GNLFSN

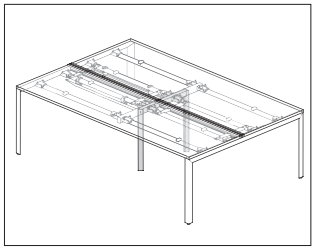

Product Information

Description

This intermediate desk leg provides support within a single-sided or back-to-back bench application when using a performance rail. This fixed-height leg provides 1¾″ of leveling adjustment.

Notes

Size of leg must match combined depth of surfaces being supported.

Dimensions

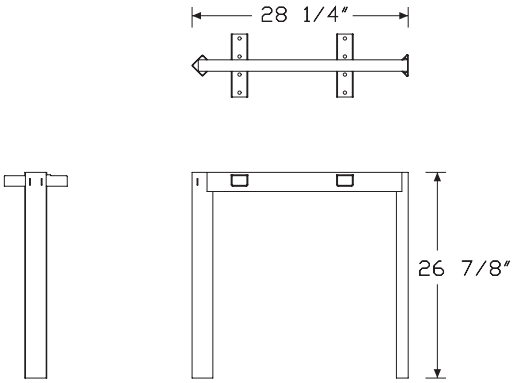

Specification Information

Step 1.

GN A

Step 2. Leg

LF	fixed height A	

Step 3. Application

SN.R	intermediate desk with performance rail A	

Step 4. Size

24	24″ deep A	
30	30″ deep A	
48	48″ deep A	
60	60″ deep A	

Prices for Steps 1-4.

GNLFSN.R	**24**	$433
	30	$441
	48	$554
	60	$578

Step 5. Leg Finish

Metallic Paint

613	silver (CP) A	+$0

Sand Texture Paint

91	white (CP) A	+$0
98	studio white (CP) A	+$0
BK	black A	+$0
G1	graphite (CP) A	+$0
UBK	ultra black (CP) A	+$0

Engage Leg, Asymmetrical Desk End, Double

GNLFAL
GNLFAR

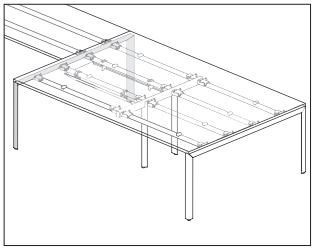

Product Information

Description

This leg supports an asymmetrical application, with a back-to-back application on 1 side of the leg and a single surface on the other side of the leg. It is fixed height, and provides 1¾″ of leveling adjustment.

Notes

Size of the leg must match the depth of the surfaces being supported.

Dimensions

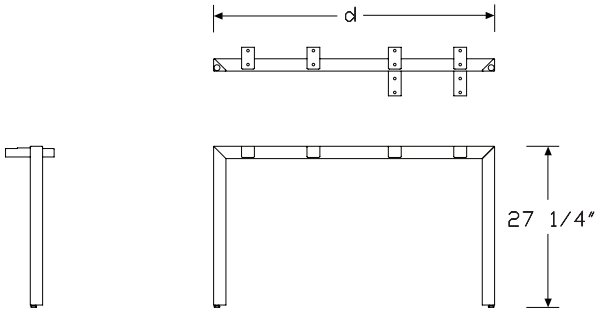

Left Hand

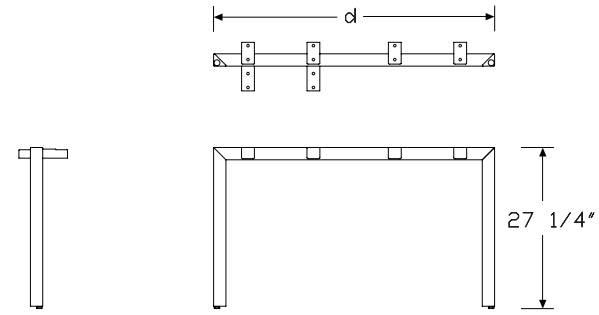

Right Hand

Specification Information

Step 1.

GN

Step 2. Leg Type

LF	fixed height

Step 3. Application

AL.	left hand
AR.	right hand

Step 4. Depth

48	48″ deep
60	60″ deep

Prices for Steps 1-4.

GNLFAL.	**48**	$564
	60	$598
GNLFAR.	**48**	$564
	60	$598

Step 5. Leg Finish

Metallic Paint

613	silver (CP)	+$0

Sand Texture Paint

91	white (CP)	+$0
98	studio white (CP)	+$0
BK	black	+$0
DB3	glacier	+$60
DN2	nightfall	+$60
DR1	canyon	+$60
G1	graphite (CP)	+$0
OLF	olive	+$60
UBK	ultra black (CP)	+$0

Engage Leg, Desk End, Double, Meeting End — GNLFPN

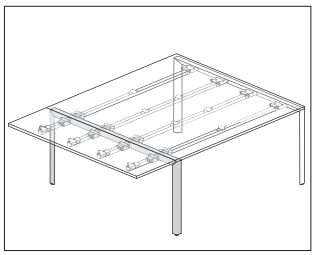

Product Information

Description

This leg supports the use of meeting end beams and surface at the end of a back-to-back bench.

Notes

Size of leg must match the combined depth of the 2 primary surfaces or 1 project table surface being supported.

Order meeting end beams (GNBM.) and surface (GNTDx.) separately.

Dimensions

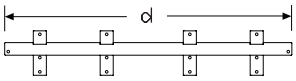

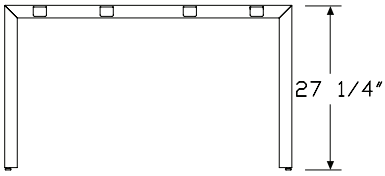

Specification Information

Step 1.

GN

Step 2. Leg Type

LF	fixed height

Step 3. Application

PN.	meeting end

Step 4. Depth

48	48″ deep
60	60″ deep
72	72″ deep

Prices for Steps 1-4.

GNLFPN.	**48**	$552
	60	$614
	72	$661

Step 5. Leg Finish

Metallic Paint

613	silver (CP)	+$0

Sand Texture Paint

91	white (CP)	+$0
98	studio white (CP)	+$0
BK	black	+$0
DB3	glacier	+$60
DN2	nightfall	+$60
DR1	canyon	+$60
G1	graphite (CP)	+$0
OLF	olive	+$60
UBK	ultra black (CP)	+$0

Engage Leg, Back-to-Back Bracing Leg, Performance Rail GNLFBN

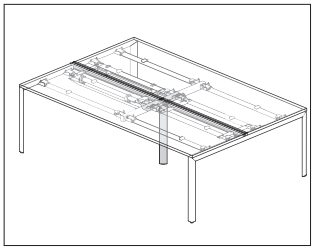

Product Information

Description

This seated-height stabilizer leg kit provides support within a back-to-back bench application with performance rail where no intermediate leg is being used. This fixed-height leg provides 1¾″ of leveling adjustment.

Notes

This leg is only required in a back-to-back application with performance rail when no intermediate leg is being used.

Dimensions

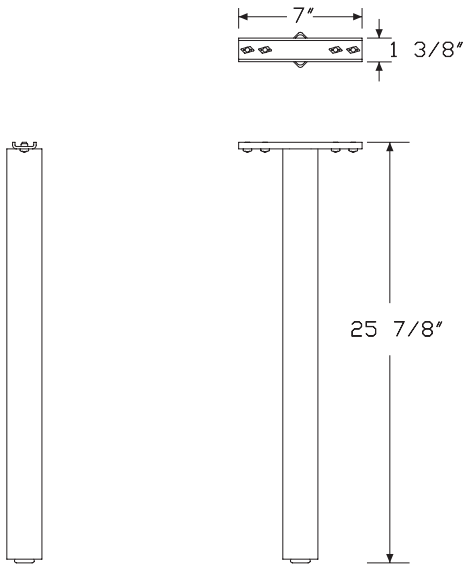

Specification Information

Step 1.

GN A

Step 2. Leg

LF fixed height A

Step 3. Application

BN.R bracing leg for use with performance rail A

Prices for Steps 1-3.

GNLFBN.R	$383

Step 4. Leg Finish

Metallic Paint

613	silver (CP) A	+$0

Sand Texture Paint

91	white (CP) A	+$0
98	studio white (CP) A	+$0
BK	black A	+$0
G1	graphite (CP) A	+$0
UBK	ultra black (CP) A	+$0

Engage Leg, Standing End, Double GNLSEN

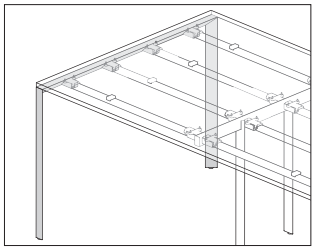

Product Information

Description

This double standing height end leg provides support at either end of a back-to-back bench or project table application. This fixed height leg provides 1¾″ of leveling adjustment.

Notes

Size of leg must match the combined depth of the 2 primary surfaces or 1 project table surface being supported.

Dimensions

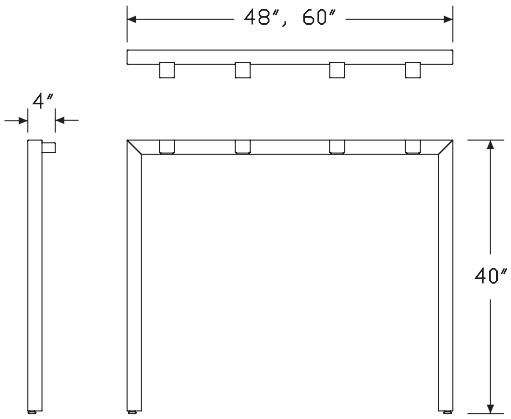

Specification Information

Step 1.

GN A

Step 2. Leg

LS standing height A

Step 3. Application

EN. desk end double A

Step 4. Size

48 48″ deep A
60 60″ deep A

Prices for Steps 1-4.

GNLSEN.	**48**	$766
	60	$814

Step 5. Leg Finish

Metallic Paint

613	silver (CP) A	+$0

Sand Texture Paint

91	white (CP) A	+$0
98	studio white (CP) A	+$0
BK	black A	+$0
DB3	glacier A	+$60
DN2	nightfall A	+$60
DR1	canyon A	+$60
G1	graphite (CP) A	+$0
UBK	ultra black (CP) A	+$0

Engage Leg, Intermediate Standing GNLSSN

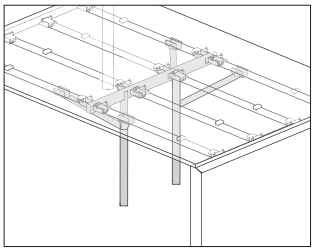

Product Information

Description

This intermediate standing height leg provides support in a back-to-back bench or project table application. This fixed height leg provides 1¾″ of leveling adjustment. Leg includes all bracing, structural supports, and hardware required for a standing height application.

Notes

Size of leg must match the combined depth of the 2 primary surfaces or 1 project table surface being supported.

Dimensions

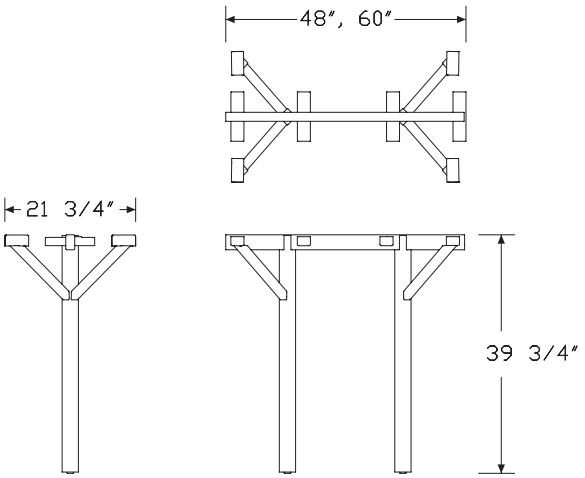

Specification Information

Step 1.

GN A

Step 2. Leg

LS standing height A

Step 3. Application

SN. intermediate A

Step 4. Size

48 48″ deep A
60 60″ deep A

Prices for Steps 1-4.

GNLSSN.	**48**	$1257
	60	$1303

Step 5. Leg Finish

Metallic Paint

613	silver (CP) A	+$0

Sand Texture Paint

91	white (CP) A	+$0
98	studio white (CP) A	+$0
BK	black A	+$0
DB3	glacier A	+$60
DN2	nightfall A	+$60
DR1	canyon A	+$60
G1	graphite (CP) A	+$0
OLF	olive A	+$60
UBK	ultra black (CP) A	+$0

Engage Leg, Standing Back-to-Back Bracing Leg GNLSBN

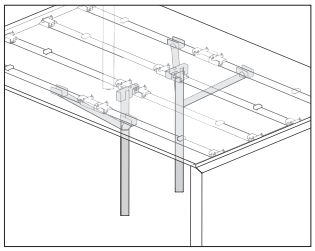

Product Information

Description

This standing height stabilizer leg kit provides support in a back-to-back bench or project table application where no intermediate leg is being used. This fixed height leg provides 1¾″ of leveling adjustment. Leg includes all bracing, structural supports, and hardware required for a standing height application.

Notes

This leg is only used in standing height applications that have 1 beam width spanning between 2 end legs, or between 1 end leg and 1 end-of-run storage unit that supports the surface.

This leg can only be used with 42″-wide or wider beams.

Dimensions

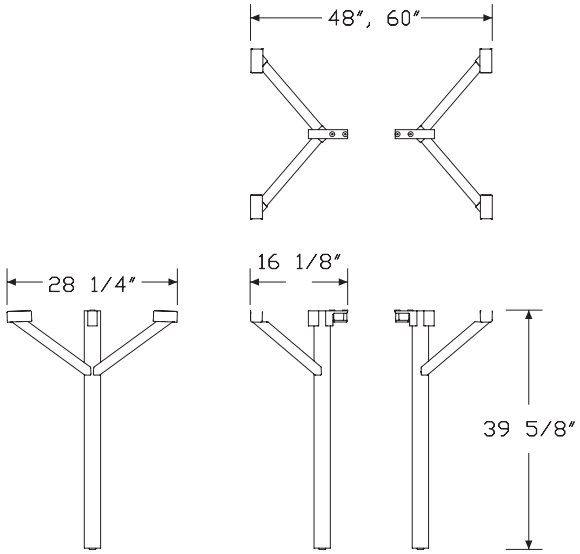

Specification Information

Step 1.

GN A

Step 2. Leg

LS	standing height A	

Step 3. Application

BN.	bracing leg A	

Step 4. Depth

48	48″ deep application A	
60	60″ deep application A	

Prices for Steps 1-4.

GNLSBN.	**48**	$1175
	60	$1196

Step 5. Leg Finish

Metallic Paint

613	silver (CP) A	+$0

Sand Texture Paint

91	white (CP) A	+$0
98	studio white (CP) A	+$0
BK	black A	+$0
DB3	glacier A	+$60
DN2	nightfall A	+$60
DR1	canyon A	+$60
G1	graphite (CP) A	+$0
OLF	olive A	+$60
UBK	ultra black (CP) A	+$0

Closed Leg, Desk End, Single, Performance Rail

GNCFEL
GNCFER

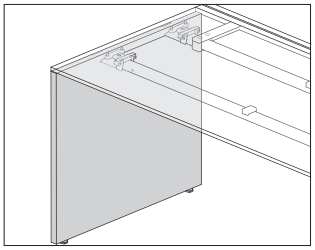

Product Information

Description

This single desk end leg provides support for an individual table or the end of a single-sided bench or return when using a performance rail. It has a laminate top and thermoplastic edge, laminate top with a thermoplastic backed plywood edge, or veneer top and edge. This fixed height leg provides 1¾″ of leveling adjustment.

Notes

Size of leg must match depth of surface being supported.

Top of leg will be under the attached surface.

Grain/pattern direction is vertical on veneer, wood grain laminates, and directional laminates.

Dimensions

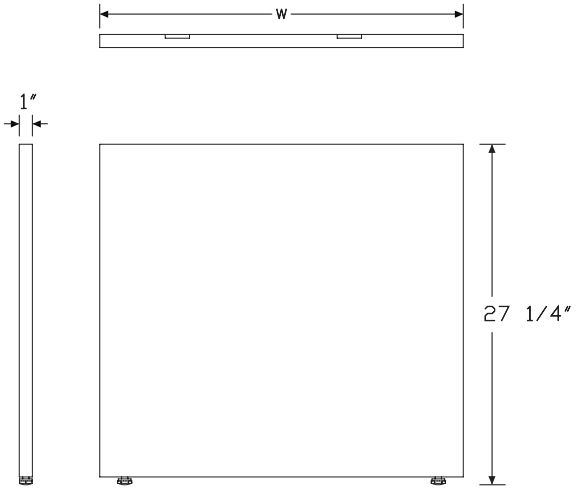

Specification Information

Step 1.

GN A

Step 2. Leg Type

CF fixed height A

Step 3. Application

EL.R left hand, for use with performance rail A

ER.R right hand, for use with performance rail A

Step 4. Size

24 24″ deep A

30 30″ deep A

Step 5. Material

L high-pressure laminate top/thermoplastic edge A

U high-pressure laminate/universal edge A

W veneer A

Prices for Steps 1-5.

		L	U	W
GNCFEL.R	**24**	$531	531	1057
	30	$554	554	1105
GNCFER.R	**24**	$531	531	1057
	30	$554	554	1105

Step 6. Leg Finish

For high-pressure laminate top/thermoplastic edge (L) or high-pressure laminate/universal edge (U)

125	natural maple (CP) A	+$0
126	natural cherry (CP) A	+$0
127	walnut (CP) A	+$0
139	light ash (CP) A	+$0
140	warm ash (CP) A	+$0
76	light brown walnut A	+$0
8Q	folkstone grey (CP) A	+$0
91	white (CP) A	+$0
98	studio white (CP) A	+$0
CL	cool grey neutral A	+$0
HF	inner tone light A	+$0
HP	light anigre A	+$0
LBA	clear on ash (CP) A	+$0
LBR	phantom ecru A	+$0
LBS	phantom cocoa A	+$0
LBU	medium matte walnut (CP) A	+$0
LBV	warm grey teak A	+$0
LBB	oak on ash (CP) A	+$0
LBC	walnut on ash (CP) A	+$0
LBF	neutral twill A	+$0
LBJ	graphite twill A	+$0
LBQ	white twill A	+$0
LT	light tone A	+$0
LU	soft white A	+$0
WL	warm stone (CP) A	+$0
WN	warm grey neutral A	+$0

Wood Veneer

For veneer (W)

2U	light brown walnut A	+$55
40	dark brown walnut A	+$55
ET	clear on ash A	+$55
EU	oak on ash A	+$55
EV	walnut on ash A	+$55

Step 7. Edge Finish

For high-pressure laminate top/thermoplastic edge (L)

125	natural maple (CP) A	+$0
126	natural cherry (CP) A	+$0
127	walnut (CP) A	+$0
139	light ash (CP) A	+$0
140	warm ash (CP) A	+$0
G1	graphite (CP) A	+$0
76	light brown walnut A	+$0
8Q	folkstone grey (CP) A	+$0
91	white (CP) A	+$0
98	studio white (CP) A	+$0
CL	cool grey neutral A	+$0
HF	inner tone light A	+$0
HP	light anigre A	+$0
LBA	clear on ash (CP) A	+$0
LBR	phantom ecru A	+$0
LBS	phantom cocoa A	+$0
LBU	medium matte walnut (CP) A	+$0
LBV	warm grey teak A	+$0
LBB	oak on ash (CP) A	+$0
LBC	walnut on ash (CP) A	+$0
LBF	neutral twill A	+$0
LBJ	graphite twill A	+$0
LBQ	white twill A	+$0
LU	soft white A	+$0
WL	warm stone (CP) A	+$0
WN	warm grey neutral A	+$0

For high-pressure laminate/universal edge (U)

PLY	plywood edge A	+$50

Step 8. Bracket Finish

Finish

613	silver (CP) A	+$0
91	white (CP) A	+$0
98	studio white (CP) A	+$0
BK	black A	+$0
G1	graphite (CP) A	+$0

Closed Leg, Desk End, Double GNCFEN

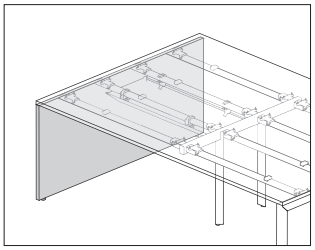

Product Information

Description

This double desk end leg provides support at either end of a back-to-back bench application or project table. It has a laminate top and thermoplastic edge, laminate top with a thermoplastic backed plywood edge, or veneer top and edge. This fixed height leg provides 1¾″ of leveling adjustment.

Notes

Size of leg must match the combined depth of the 2 primary surfaces or 1 project table surface being supported.

Top of leg will be under the attached surface.

Grain/pattern direction is vertical on veneer, wood grain laminates, and directional laminates.

Dimensions

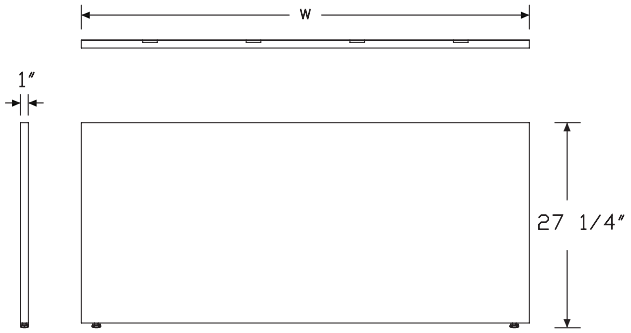

Specification Information

Step 1.

GN A

Step 2. Leg Type

CF fixed height A

Step 3. Application

EN. desk end double A

Step 4. Size

48 48″ deep A

60 60″ deep A

Step 5. Material

L high-pressure laminate top/thermoplastic edge A

U high-pressure laminate/universal edge A

W veneer A

Prices for Steps 1-5.

	L	U	W
GNCFEN. 48	$812	812	1617
60	$933	933	1862

Step 6. Leg Finish

For high-pressure laminate top/thermoplastic edge (L) or high-pressure laminate/universal edge (U)

125	natural maple (CP) A	+$0
126	natural cherry (CP) A	+$0
139	light ash (CP) A	+$0
140	warm ash (CP) A	+$0
76	light brown walnut A	+$0
8Q	folkstone grey (CP) A	+$0
91	white (CP) A	+$0
98	studio white (CP) A	+$0
CL	cool grey neutral A	+$0
HF	inner tone light A	+$0
HP	light anigre A	+$0
LBA	clear on ash (CP) A	+$0
LBR	phantom ecru A	+$0
LBS	phantom cocoa A	+$0
LBU	medium matte walnut (CP) A	+$0
LBV	warm grey teak A	+$0
LBB	oak on ash (CP) A	+$0
LBC	walnut on ash (CP) A	+$0
LBF	neutral twill A	+$0
LBJ	graphite twill A	+$0
LBQ	white twill A	+$0
LT	light tone A	+$0
LU	soft white A	+$0
WL	warm stone (CP) A	+$0
WN	warm grey neutral A	+$0

Wood Veneer

For veneer (W)

2U	light brown walnut A	+$55
40	dark brown walnut A	+$55
ET	clear on ash A	+$55
EU	oak on ash A	+$55
EV	walnut on ash A	+$55

Step 7. Edge Finish

For high-pressure laminate top/thermoplastic edge (L)

125	natural maple (CP) A	+$0
126	natural cherry (CP) A	+$0
127	walnut (CP) A	+$0
139	light ash (CP) A	+$0
140	warm ash (CP) A	+$0
G1	graphite (CP) A	+$0
76	light brown walnut A	+$0
8Q	folkstone grey (CP) A	+$0
91	white (CP) A	+$0
98	studio white (CP) A	+$0
CL	cool grey neutral A	+$0
HF	inner tone light A	+$0
HP	light anigre A	+$0
LBA	clear on ash (CP) A	+$0
LBR	phantom ecru A	+$0
LBS	phantom cocoa A	+$0
LBU	medium matte walnut (CP) A	+$0
LBV	warm grey teak A	+$0
LBB	oak on ash (CP) A	+$0
LBC	walnut on ash (CP) A	+$0
LBF	neutral twill A	+$0
LBJ	graphite twill A	+$0
LBQ	white twill A	+$0
LU	soft white A	+$0
WL	warm stone (CP) A	+$0
WN	warm grey neutral A	+$0

For high-pressure laminate/universal edge (U)

PLY	plywood edge A	+$50

Step 8. Bracket Finish

Finish

613	silver (CP) A	+$0
91	white (CP) A	+$0
98	studio white (CP) A	+$0
BK	black A	+$0
G1	graphite (CP) A	+$0

Closed Leg, Standing End, Double GNCSEN

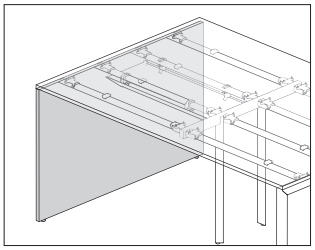

Product Information

Description

This double standing height end leg provides support at either end of a back-to-back bench application or project table. It has a laminate top and thermoplastic edge, laminate top with a thermoplastic backed plywood edge, or veneer top and edge. This fixed height leg provides 1¾″ of leveling adjustment.

Notes

Size of leg must match the combined depth of the 2 primary surfaces or 1 project table surface being supported.

Top of leg will be under the attached surface.

Grain/pattern direction is vertical on veneer, wood grain laminates, and directional laminates.

Dimensions

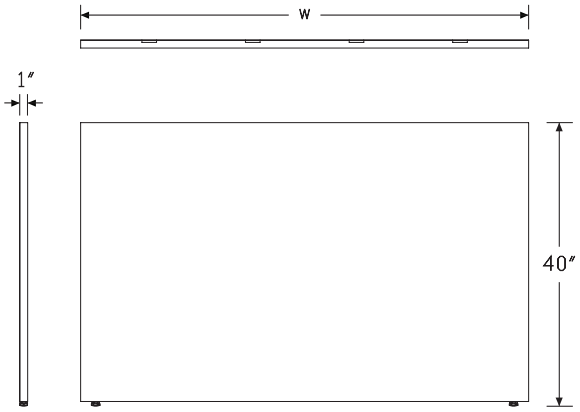

Specification Information

Step 1.

GN A

Step 2. Leg Type

CS standing height A

Step 3. Application

EN. desk end double A

Step 4. Size

48 48″ deep A

60 60″ deep A

Step 5. Material

L high-pressure laminate top/thermoplastic edge A

U high-pressure laminate/universal edge A

W veneer A

Prices for Steps 1-5.

		L	U	W
GNCSEN.	**48**	$1046	1046	2090
	60	$1209	1209	2414

Step 6. Leg Finish

For high-pressure laminate top/thermoplastic edge (L) or high-pressure laminate/universal edge (U)

125	natural maple (CP) A	+$0
126	natural cherry (CP) A	+$0
127	walnut (CP) A	+$0
139	light ash (CP) A	+$0
140	warm ash (CP) A	+$0
76	light brown walnut A	+$0
8Q	folkstone grey (CP) A	+$0
91	white (CP) A	+$0
98	studio white (CP) A	+$0
CL	cool grey neutral A	+$0
HF	inner tone light A	+$0
HP	light anigre A	+$0
LBA	clear on ash (CP) A	+$0
LBR	phantom ecru A	+$0
LBS	phantom cocoa A	+$0
LBU	medium matte walnut (CP) A	+$0
LBV	warm grey teak A	+$0
LBB	oak on ash (CP) A	+$0
LBC	walnut on ash (CP) A	+$0
LBF	neutral twill A	+$0
LBJ	graphite twill A	+$0
LBQ	white twill A	+$0
LT	light tone A	+$0
LU	soft white A	+$0
WL	warm stone (CP) A	+$0
WN	warm grey neutral A	+$0

Wood Veneer

For veneer (W)

2U	light brown walnut A	+$55
40	dark brown walnut A	+$55
ET	clear on ash A	+$55
EU	oak on ash A	+$55
EV	walnut on ash A	+$55

Step 7. Edge Finish

For high-pressure laminate top/thermoplastic edge (L)

125	natural maple (CP) A	+$0
126	natural cherry (CP) A	+$0
127	walnut (CP) A	+$0
139	light ash (CP) A	+$0
140	warm ash (CP) A	+$0
G1	graphite (CP) A	+$0
76	light brown walnut A	+$0
8Q	folkstone grey (CP) A	+$0
91	white (CP) A	+$0
98	studio white (CP) A	+$0
CL	cool grey neutral A	+$0
HF	inner tone light A	+$0
HP	light anigre A	+$0
LBA	clear on ash (CP) A	+$0
LBR	phantom ecru A	+$0
LBS	phantom cocoa A	+$0
LBU	medium matte walnut (CP) A	+$0
LBV	warm grey teak A	+$0
LBB	oak on ash (CP) A	+$0
LBC	walnut on ash (CP) A	+$0
LBF	neutral twill A	+$0
LBJ	graphite twill A	+$0
LBQ	white twill A	+$0
LU	soft white A	+$0
WL	warm stone (CP) A	+$0
WN	warm grey neutral A	+$0

For high-pressure laminate/universal edge (U)

613	silver (CP) A	+$0
PLY	plywood edge A	+$50

Step 8. Bracket Finish

Sand Texture Paint

91	white (CP) A	+$0
98	studio white (CP) A	+$0
BK	black A	+$0
G1	graphite (CP) A	+$0
UBK	ultra black (CP) A	+$0

Beams, Rectangular Primary GNBR.

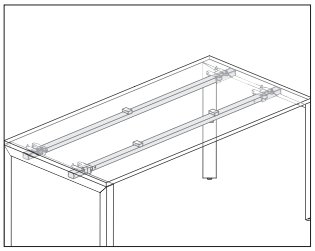

Product Information

Description

This pair of beams connects to end, asymmetrical, and intermediate Engage legs, and is required for the support of rectangular primary surfaces. Beams also provide attachment and support for cable management, screens, and other elements. Attachment hardware packs ordered separately.

Notes

To connect beams to fixed surfaces and legs up to 78″ wide, order hardware pack (GNHPF.) separately; for 84″-wide and 96″-wide beams, order hardware pack (**GNHOF.**) separately. To connect beams to sliding surfaces and legs, use generic hardware pack (GNHRS.) when using primary sliding surfaces (GNTRD., GNTRF., GNTRG., GNTRN.) with generic (G) attachment option or primary performance rail surfaces (GNTRR.) only.

Dimensions

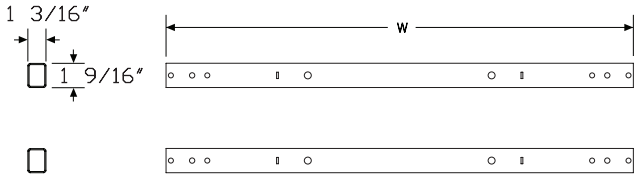

Specification Information

Step 1.

GNBR.

Step 2. Width

36	36″ wide
42	42″ wide
48	48″ wide
54	54″ wide
60	60″ wide
66	66″ wide
72	72″ wide
78	78″ wide A
84	84″ wide A
96	96″ wide A

Prices for Steps 1-2.

GNBR.	**36**	$127
	42	$136
	48	$143
	54	$206
	60	$186
	66	$256
	72	$226
	78	$314
	84	$328
	96	$351

Step 3. Finish

Sand Texture Paint

91	white (CP)	+$13
98	studio white (CP)	+$0
BK	black	+$0
CL	cool grey neutral	+$0
G1	graphite (CP)	+$13
UBK	ultra black (CP)	+$0

Beams, Meeting End GNBM.

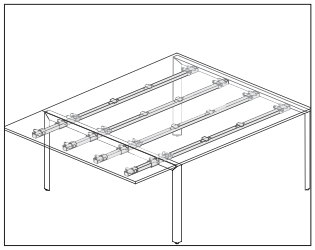

Product Information

Description

This pair of beams connects to a meeting end and intermediate Engage legs, and is required when specifying a meeting end surface across the end of a back-to-back configuration. Beams also provide attachment and support for cable management, screens, and other elements. Attachment hardware packs ordered separately.

Notes

Specify beam size to match the width of the adjacent rectangular primary surface.

To connect beams to fixed surfaces and legs up to 78″ wide, order hardware pack (GNHPF.) separately; for 84″-wide and 96″-wide beams, order hardware pack (**GNHOF.**) separately. To connect beams to sliding surfaces and legs, use generic hardware pack (GNHRS.) when using primary sliding surfaces (GNTRD., GNTRF., GNTRG., GNTRN.) with generic (G) attachment option or primary performance rail surfaces (GNTRR.) only.

To attach meeting end surface to the meeting end beams, specify 2 hardware packs (GNHPF.).

Meeting end beams are not usable in standing height applications.

Dimensions

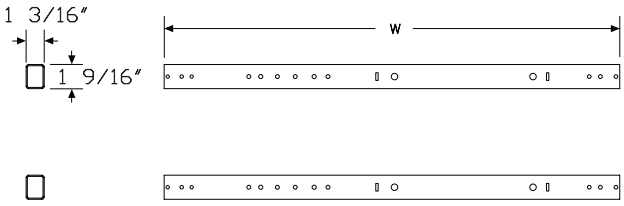

Specification Information

Step 1.

GNBM.

Step 2. Width

48	48″ wide
60	60″ wide
66	66″ wide
72	72″ wide
84	84″ wide

Prices for Steps 1-2.

GNBM.	**48**	$262
	60	$316
	66	$324
	72	$326
	84	$392

Performance Rail

GNRD.
GNRS.

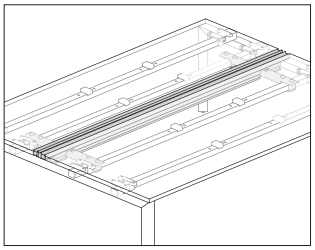

Product Information

Description

This rail attaches to the rear beam(s) in a single-sided or back-to-back rectangular application. It provides an attachment location for many different products, including desk up screens, monitor arms, personal shelves, task lights, and storage. Rail is anodized aluminum and comes with 1 in-line connector for aligning 2 rails placed side-by-side. Attachment hardware included.

Notes

Specify rail width to match width of beam to be used for attachment.

Surfaces must be specified to be used with performance rail.

Performance rail cannot be used within 120° application.

End cap is required to finish exposed end of rail. Order end cap (GNRC.) separately.

Trim strip is available to fill the center channel when screens are not being used. Order trim strip (GNRT.) separately.

Dimensions

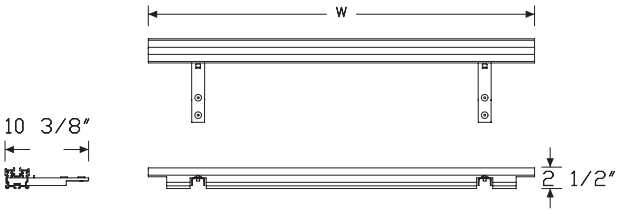

Single Sided Performance Rail

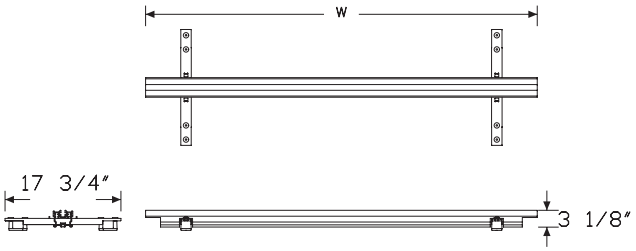

Double Sided Performance Rail

Specification Information

Step 1.

GN A

Step 2. Application

RD.	performance rail, back-to-back application A
RS.	performance rail, single-sided application A

Step 3. Width

42	42″ wide A
48	48″ wide A
54	54″ wide A
60	60″ wide A
66	66″ wide A
72	72″ wide A
78	78″ wide A
84	84″ wide A
96	96″ wide A

Prices for Steps 1-3.

GNRD.	**42**	$463
	48	$485
	54	$511
	60	$535
	66	$559
	72	$586
	78	$609
	84	$634
	96	$678
GNRS.	**42**	$453
	48	$477
	54	$504
	60	$527
	66	$549
	72	$570
	78	$594
	84	$622
	96	$666

End Cap, Performance Rail GNRC.

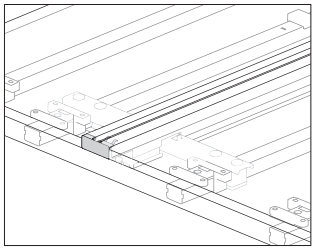

Product Information

Description

This end trim is required to finish the exposed ends of a Layout Studio® performance rail. Finish is folkstone grey. Quantity of 2.

Notes

End caps are required to finish the exposed ends of a performance rail (GNRS., GNRD.).

End caps are finished in folkstone grey (8Q) to complement the anodized aluminum rail.

An end cap is not needed when using a meeting end surface (**GNTDG.**, GNTDN.), a gallery panel (GNSTA.), a suspended end cubby (LES.) or Tu® wood end-of-run storage components (L2ER.).

Dimensions

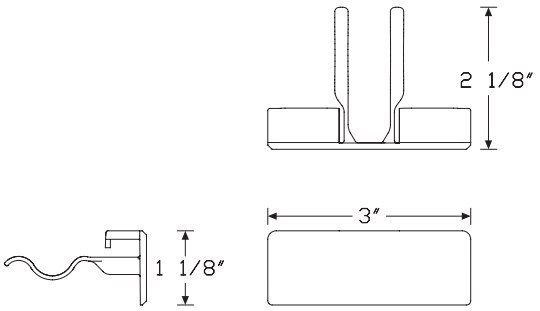

Specification Information

Step 1.

GN A

Step 2. Application

RC. end cap A

Step 3. Quantity

02 Package of 2 A

Prices for Steps 1-3.

GNRC. 02	$22

End Cap, Performance Rail, Package GNRC.

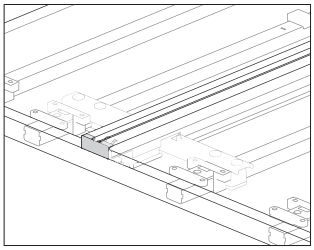

Product Information

Description

This end trim finishes the exposed ends of a Layout Studio® performance rail. Finish is folkstone grey. Quantity of 10.

Dimensions

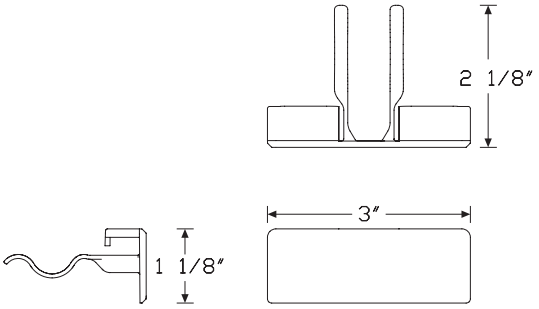

Specification Information

Step 1.

GN A

Step 2. Application

RC. end cap A

Step 3. Quantity

10 Package of 10 A

Prices for Steps 1-3.

GNRC. 10	$80

Trim Strip, Performance Rail Center Channel GNRT.

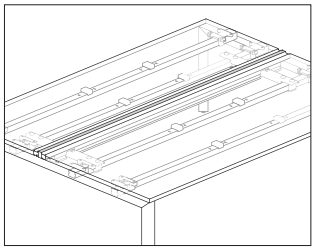

Product Information

Description

This aluminum trip strip fills an unused center channel of a Layout Studio® performance rail. It is anodized aluminum and can be field cut to desired length.

Notes

Trim strip width does not need to match width of performance rail.

The 3″-wide trim strip fills the center channel between the end of a bench and a shared cubby stanchion in an in-line application.

Dimensions

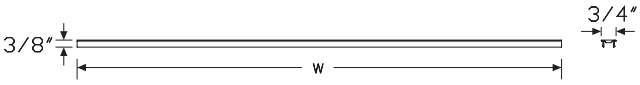

Specification Information

Step 1.

GN A

Step 2. Application

RT. trim strip A

Step 3. Width

03	3″ wide	A
42	42″ wide	A
48	48″ wide	A
54	54″ wide	A
60	60″ wide	A
66	66″ wide	A
72	72″ wide	A
78	78″ wide	A
84	84″ wide	A
96	96″ wide	A

Prices for Steps 1-3.

GNRT.	**03**	$38
	42	$96
	48	$104
	54	$111
	60	$119
	66	$125
	72	$133
	78	$139
	84	$149
	96	$165

Access Door GNPD.

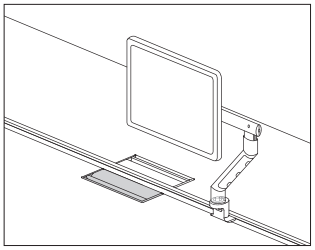

Product Information

Description

This metal door assembly fits inside an access cutout in the back edge of a Layout Studio® primary work surface and provides access to the power and data channel. It has a 3-sided frame and pivoting door.

Notes

Work surface must be specified with access door cutout. Order surface separately.

Dimensions

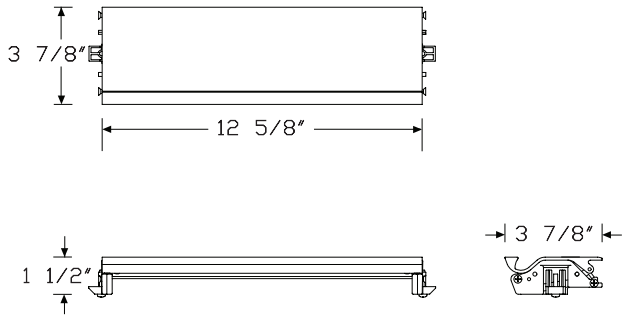

Specification Information

Step 1.

GNPD. A

Step 2. Application

A	edge mounted A	

Prices for Steps 1-2.

GNPD. A		$206

Step 3. Finish

Metallic Paint

613	silver (CP) A	+$0

Sand Texture Paint

BK	black A	+$0
UBK	ultra black (CP) A	+$0

Smooth Paint

91	white (CP) A	+$0
98	studio white (CP) A	+$0
G1	graphite (CP) A	+$0

Junction Block Attachment Bracket, Performance Rail GNPA.

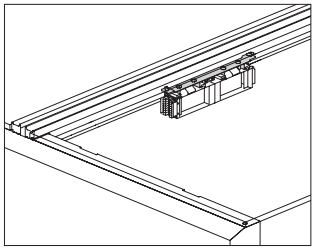

Product Information

Description

This painted steel bracket attaches a 4-circuit power block to a Layout Studio® performance rail. Finish is cool grey neutral.

Notes

Each single-sided (S) and back-to-back (D) bracket supports 1 double power block or 1 double and 1 single power block, between the 2 rear beams centered both front-to-back and left-to-right.

Each performance rail-attached bracket (S or D) supports 1 double or 1 single junction block.

Order 4-circuit junction block (GN1358.) separately.

Dimensions

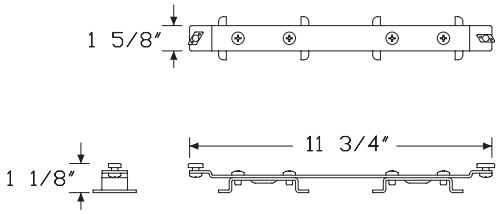

Specification Information

Step 1.

GNPA.R A

Step 2. Application

D	performance rail-attached, back-to-back A
S	performance rail-attached, single-sided A

Prices for Steps 1-2.

GNPA.R	**D**	$26
	S	$26

Junction Block, 4-Circuit GN1358

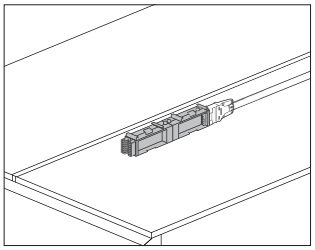

Product Information

Description

This block attaches to a junction block attachment bracket and accepts 4-circuit receptacles for access and distribution of up to 4 20-amp circuits. It has connection points at both ends for attaching a power entry, a 4-circuit power jumper, or block-to-block connector. Finish is black. It is UL Listed for use with Layout Studio® in the US and Canada.

Notes

Layout Studio modular power products are only compatible with other Layout Studio modular products, or with Connect™ 4-circuit modular components. Note that the UL listing for Layout Studio is no longer applicable when connecting Layout Studio power to Connect power.

For single-sided applications, specify the 2-duplex block (GN1358.2S) or the 1-duplex block (GN1358.1S).

For back-to-back applications, specify the 2-duplex block (GN1358.2B) or the 1-duplex block (GN1358.1B).

Order the following products separately:

- Duplex receptacle, 4-circuit (GN1355.)
- Junction block attachment bracket (GNPA.)

To route power from building to junction block, order 4-circuit power entry (GN1351. or GN1352.) separately.

To route power between junction blocks, order junction block to junction block jumper (GN1353.) separately.

To connect 2 junction blocks together, order a short block to block connector (GN1354.S) separately.

Dimensions

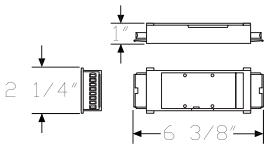

1 Duplex, Single-sided Application

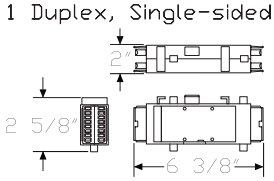

1 Duplex, Back-to-Back Application

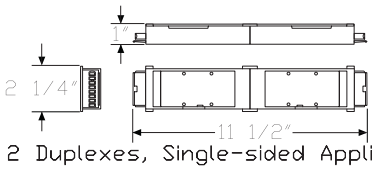

2 Duplexes, Single-sided Application

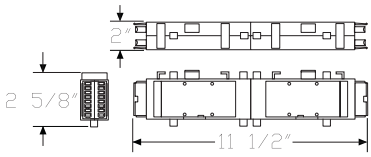

2 Duplexes, Back-to-Back Application

Specification Information

Step 1.

GN1358.

Step 2. Type

1S	1 duplex, single-sided application
1B	1 duplex, back-to-back application
2S	2 duplexes, single-sided application
2B	2 duplexes, back-to-back application

Step 3. Attachment Hardware

B	beam attached
R	performance rail attached

Prices for Steps 1-3.

		B	R
GN1358.	**1S**	$119	134
	1B	$126	140
	2S	$96	112
	2B	$106	121

Block Connector, 4-Circuit GN1354

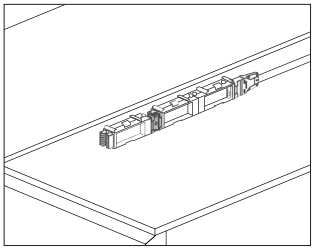

Product Information

Description

This connector connects 2 junction blocks together. Finish is black. Attachment hardware included. It is UL Listed for use with Layout Studio® in the US and Canada.

Notes

Layout Studio modular power products are only compatible with other Layout Studio modular products, or with Connect™ 4-circuit modular components. Note that the UL listing for Layout Studio is no longer applicable when connecting Layout Studio power to Connect power.

When 3 duplex receptacles are required per access point, use this connector to connect a GN1358.1S to a GN1358.2S for single-sided applications, or a GN1358.1B to a GN1358.2B for back-to-back applications.

Dimensions

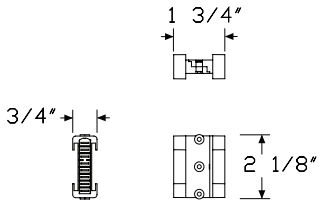

Short Receptacle-to-Receptacle Block Connector

Specification Information

Step 1.

GN1354.S	$64

Junction Block-to-Junction Block Jumper GN1353

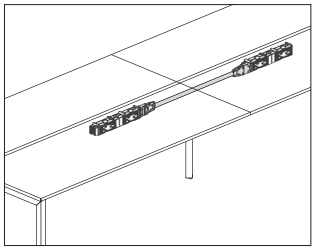

Product Information

Description

This adjustable power jumper distributes up to 4 20-amp circuits between 2 junction blocks. One end of the jumper extends an additional 3″ when connecting to an adjacent junction block. It is UL Listed for use with Layout Studio® in the US and Canada.

Notes

Layout Studio modular power products are only compatible with other Layout Studio modular products, or with Connect™ 4-circuit modular components. Note that the UL listing for Layout Studio is no longer applicable when connecting Layout Studio power to Connect power.

Finish on 5/8″ oval metallic conduit is silver.

For New York City, a harness cover (GNPH.) to span between wire management trays must be ordered separately.

Dimensions

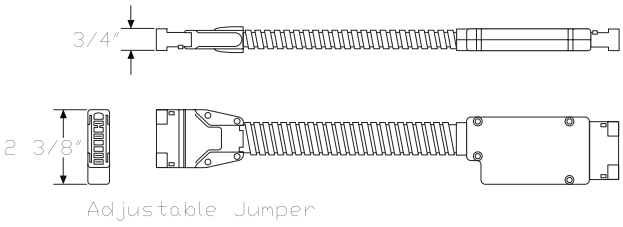

Specification Information

Step 1.

GN1353.

Step 2. Width

12	12″ wide
18	18″ wide
24	24″ wide
30	30″ wide
36	36″ wide
42	42″ wide
48	48″ wide
54	54″ wide
60	60″ wide
66	66″ wide
72	72″ wide
78	78″ wide
84	84″ wide
90	90″ wide
108	108″ wide
120	120″ wide
132	132″ wide
144	144″ wide

Step 3. Type

A	adjustable jumper

Prices for Steps 1-3.

		A
GN1353.	**12**	$102
	18	$111
	24	$118
	30	$125
	36	$133
	42	$138
	48	$147
	54	$153
	60	$162
	66	$166
	72	$174
	78	$185
	84	$189
	90	$196
	108	$217
	120	$229
	132	$246
	144	$260

Harness Cover GNPH.

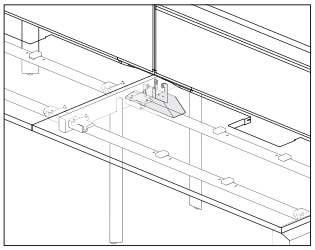

Product Information

Description

This cover provides a secure chase for the routing of a power harness between Layout Studio® wire management trays when UL1286 Listing is required.

Notes

Specify power harness separately.

Dimensions

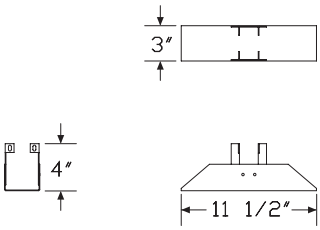

Specification Information

Step 1.

GNPH.	$38

Step 2. Finish

Metallic Paint

613	silver (CP)	+$0

Sand Texture Paint

91	white (CP)	+$0
98	studio white (CP)	+$0
BK	black	+$0
G1	graphite (CP)	+$0
UBK	ultra black (CP)	+$0

Duplex Receptacle, 4-Circuit GN1355

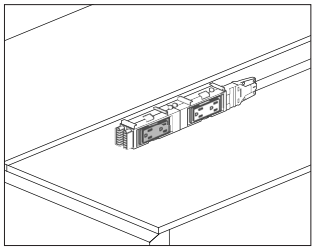

Product Information

Description

This 15- or 20-amp duplex receptacle attaches to a junction block to provide electrical access. Finish is black. Package of 1. It is UL Listed for use with Layout Studio® in the US and Canada.

Notes

Layout Studio modular power products are only compatible with other Layout Studio modular products, or with Connect™ 4-circuit modular components. Note that the UL listing for Layout Studio is no longer applicable when connecting Layout Studio power to Connect power.

Receptacle is labeled as I, II, III, or IV for circuit identification.

Order junction block (GN1358.) separately.

Dimensions

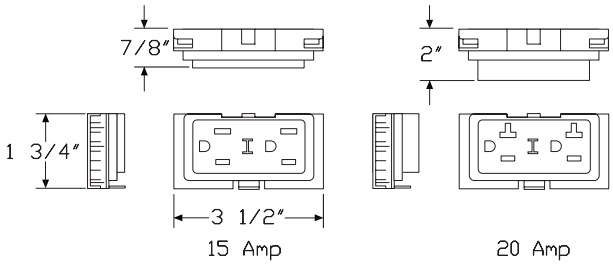

Specification Information

Step 1.

GN1355.

Step 2. Amps

15 15 amp

20 20 amp

Step 3. Circuit

1 circuit I

2 circuit II

3 circuit III

4 circuit IV

Prices for Steps 1-3.

		1	2	3	4
GN1355.	**15**	$32	32	32	32
	20	$40	40	40	40

Power Entry, 4-Circuit GN1351

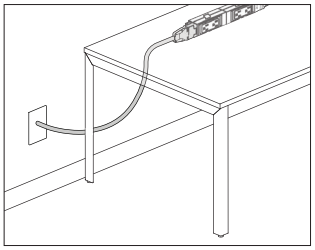

Product Information

Description

This power entry connects a building's electrical from a wall, floor, or column to the end of a 4-circuit junction block and distributes up to 4 20-amp circuits. UL Listed for use with Layout Studio® in the US and Canada.

Notes

Layout Studio modular power products are only compatible with other Layout Studio modular products, or with Connect™ 4-circuit modular components. Note that the UL listing for Layout Studio is no longer applicable when connecting Layout Studio power to Connect power.

Power entry can be field cut to the appropriate length.

For San Francisco, specify 3/8″ flex metallic conduit option (C).

Finish color on liquid tight conduit is black. Finish color on metallic conduit is silver.

To manage and/or cover power entry, order umbilical riser (GNWF. or GNWG.) or floor power entry cover (GNPC.) separately.

A licensed electrician must wire the power entry to the building's electrical system.

Dimensions

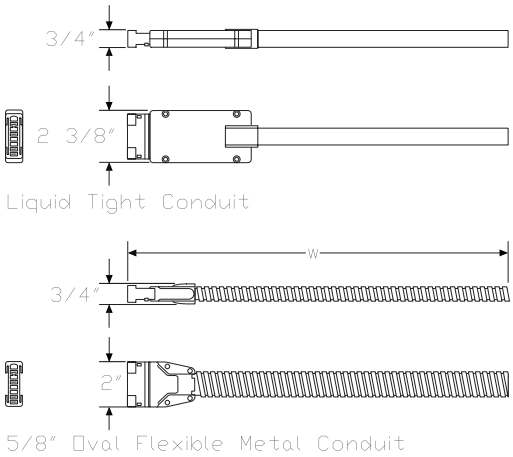

Specification Information

Step 1.

GN1351.

Step 2. Length

06	6′ long
12	12′ long
18	18′ long
24	24′ long

Step 3. Conduit Type

L	liquid tight conduit
C	3/8″ flex metallic conduit

Prices for Steps 1-3.

		L	C
GN1351.	**06**	$195	195
	12	$275	275
	18	$357	357
	24	$458	458

Power Entry, 4-Circuit, New York City GN1352

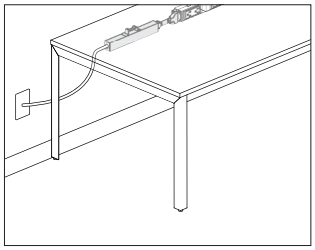

Product Information

Description

This power entry connects a building's electrical from a wall, floor, or column to the end of a 4-circuit junction block and distributes up to 4 20-amp circuits. It includes a junction box and harness. It is UL Listed for use with Layout Studio® in the US and Canada.

Notes

Layout Studio modular power products are only compatible with other Layout Studio modular products, or with Connect™ 4-circuit modular components. Note that the UL listing for Layout Studio is no longer applicable when connecting Layout Studio power to Connect power.

Power entry comes with a 38″ festoon.

A licensed electrician must wire the power entry to the building's electrical system.

Dimensions

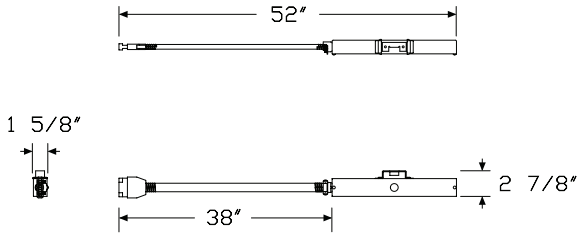

Specification Information

Step 1.

GN1352.38	$307

Wire Management Tray, Single, Performance Rail

GNWS.

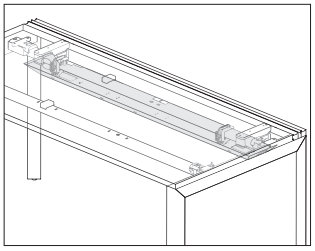

Product Information

Description

This painted steel tray holds power and voice/data cables within a Layout Studio® single-sided application when a performance rail is being used. Attachment hardware included.

Notes

Specify tray size to match beam width.

To route power and/or data from floor to tray, specify umbilical riser (GNWF.T or GNWG.T) separately.

Dimensions

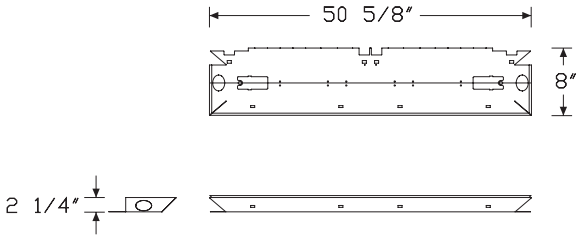

Specification Information

Step 1.

GN A

Step 2. Type

WS.R	single	A

Step 3. Size

42	42″ wide	A
48	48″ wide	A
54	54″ wide	A
60	60″ wide	A
66	66″ wide	A
72	72″ wide	A
78	78″ wide	A
84	84″ wide	A
96	96″ wide	A

Prices for Steps 1-3.

GNWS.R	**42**	$199
	48	$202
	54	$236
	60	$271
	66	$275
	72	$277
	78	$285
	84	$310
	96	$333

Step 4. Finish

613	silver (CP)	A	+$0
91	white (CP)	A	+$0
98	studio white (CP)	A	+$0
BK	black	A	+$0
G1	graphite (CP)	A	+$0
UBK	ultra black (CP)	A	+$0

Wire Management Tray

GNWD.
GNWS.

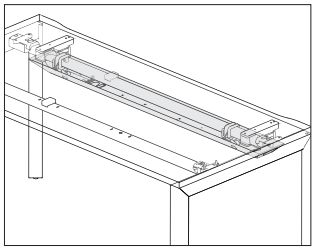

Product Information

Description

This painted steel tray provides a location to hold and manage power and voice/data cables within a Layout Studio® environment. Trays are available for both back-to-back and single-sided applications.

Notes

Single-sided wire management tray is for use with a non-rail surface. For performance rail, order wire management tray, single, performance rail (GNWS.R) separately.

The double unit attaches directly to beams with included hardware.

The single unit attaches to beams, but also requires an additional bracket. For each single tray, order 2 generic beam clamps (GNSG.) separately. If a desk up or modesty screen is being used, the generic beam clamps are not required.

Specify tray width to match beam width.

For use with double tray, order optional cable management clips (GNWC.) separately.

To route power and/or data from the floor to a cable tray, order the umbilical riser (GNWF.T or GNWG.T) separately.

Tray includes a knock-out on each end to allow a power jumper to pass from 1 tray to the next when UL1286 Listing is required (primarily New York City). Order harness cover (GNPH.) separately.

Dimensions

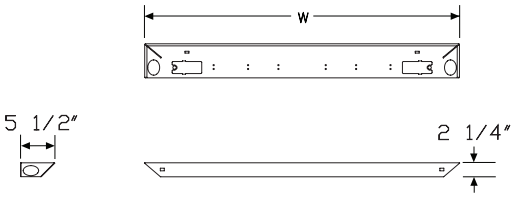

Single Tray

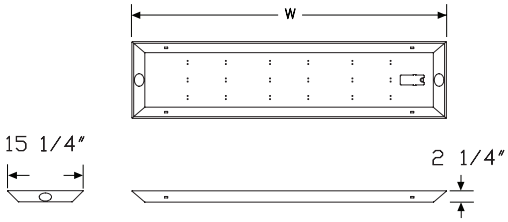

Double Tray

Specification Information

Step 1.

GN

Step 2. Type

WS.	single
WD.	double

Step 3. Width

36	36″ wide
42	42″ wide
48	48″ wide
54	54″ wide
60	60″ wide
66	66″ wide
72	72″ wide
78	78″ wide
84	84″ wide
96	96″ wide

Prices for Steps 1-3.

GNWS.	**36**	$198
	42	$201
	48	$203
	54	$237
	60	$271
	66	$275
	72	$277
	78	$285
	84	$311
	96	$333
GNWD.	**36**	$189
	42	$195
	48	$201
	54	$227
	60	$247
	66	$250
	72	$254
	78	$262
	84	$285
	96	$307

Step 4. Finish

Metallic Paint

613	silver (CP)	+$0

Sand Texture Paint		
91	white (CP)	+$0
98	studio white (CP)	+$0
BK	black	+$0
G1	graphite (CP)	+$0
UBK	ultra black (CP)	+$0

Data Module GNWM.

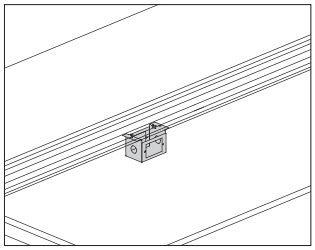

Product Information

Description

This housing mounts to the underside of a Layout Studio® performance rail or to the bottom of a wire management tray and supports face plates with voice/data ports. Finish is cool grey neutral. Attachment hardware included.

Notes

Housing accepts a standard NEMA data faceplate.

Dimensions

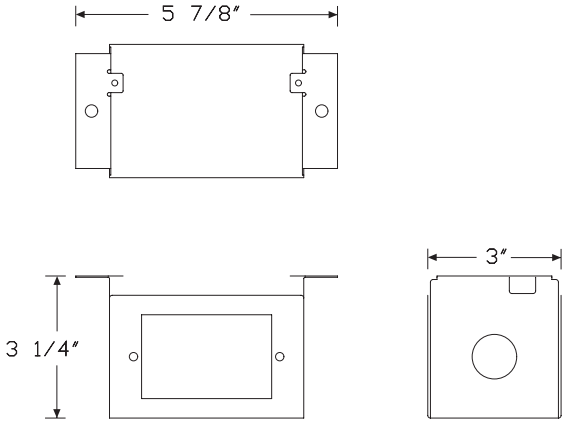

Specification Information

Step 1.

GN A

Step 2. Application

WM. data box A

Prices for Steps 1-2.

GNWM. $43

Cable Management Clips, Double Tray GNWC.

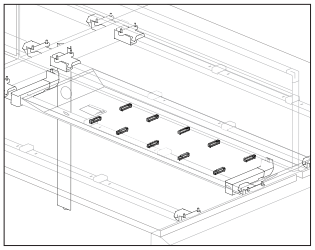

Product Information

Description

These clips attach into holes in the bottom of a double cable management tray to manage voice/data cables. Package includes 10 clips.

Dimensions

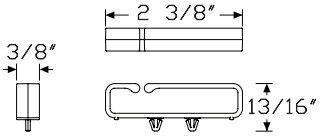

Specification Information

Step 1.

GNWC.

Step 2. Quantity

10 10 per pack

Prices for Steps 1-2.

GNWC. 10	$23

Floor Power Entry Cover GNPC.

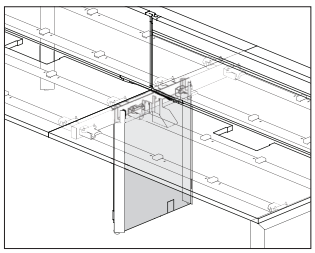

Product Information

Description

This 2-piece painted metal cover encloses the open space located between the 2 legs of a Layout Studio® 48″-, 60″-, or 72″-deep intermediate desk leg. It is used to conceal a floor power entry and/or cables from the floor to a wire management tray. Attachment hardware included.

Dimensions

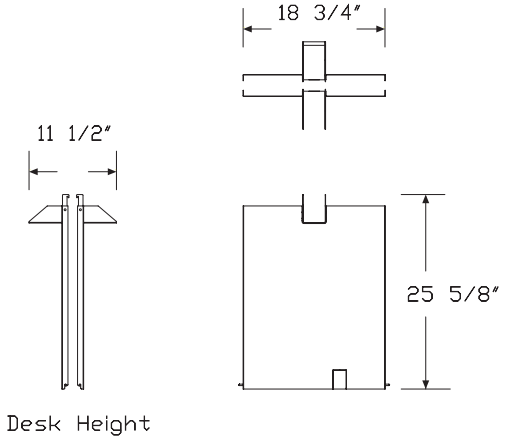

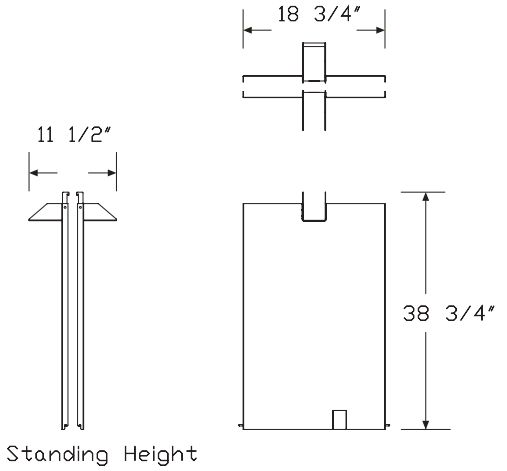

Specification Information

Step 1.

GNPC.

Step 2. Height

F	desk height
S	standing height

Prices for Steps 1-2.

GNPC.	**F**	$301
	S	$355

Step 3. Finish

Metallic Paint

613	silver (CP)	+$0

Sand Texture Paint

91	white (CP)	+$0
98	studio white (CP)	+$0
BK	black	+$0
DB3	glacier	+$30
DN2	nightfall	+$30
DR1	canyon	+$30
G1	graphite (CP)	+$0
OLF	olive	+$30
UBK	ultra black (CP)	+$0

Umbilical Riser, Fixed Height

GNWF.
GNWG.

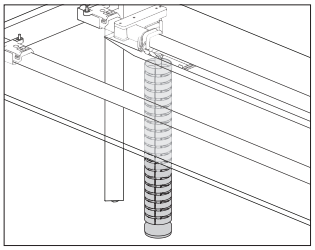

Product Information

Description

This umbilical riser routes power and/or data cables from the floor to the underside of a surface or wire management tray.

Notes

For data capacity, see Cable Capacity Chart in Omni.

Dimensions

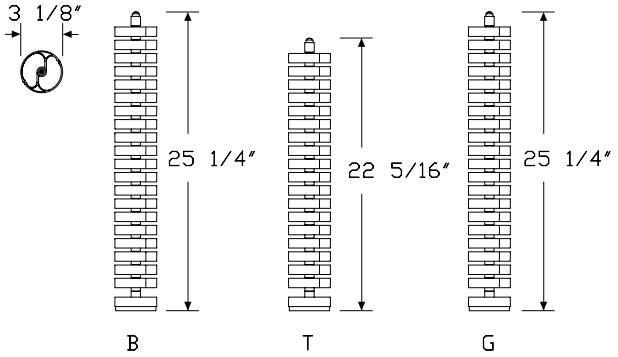

Fixed, seated height

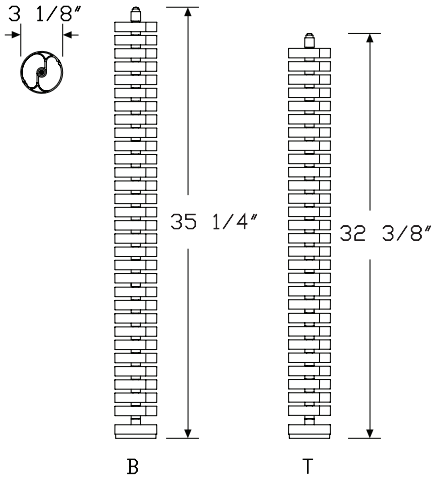

Fixed, standing height

Specification Information

Step 1.

GN

Step 2. Type

WG.	fixed, standing height [A]
WF.	fixed, seated height

Step 3. Attachment

For fixed, seated height (WF.)

B	beam attachment
T	tray attachment
G	generic attachment

For fixed, standing height (WG.)

B	beam attachment
T	tray attachment

Prices for Steps 1-3.

GNWG.	**B**	$228
	T	$220
GNWF.	**B**	$113
	T	$104
	G	$124

Step 4. Finish

Metallic Paint

613	silver (CP)	+$0

Sand Texture Paint

91	white (CP)	+$0
98	studio white (CP)	+$0
BK	black	+$0
G1	graphite (CP)	+$0
UBK	ultra black (CP)	+$0

Primary Worksurface, Rectangular, Performance Rail

GNTRR.

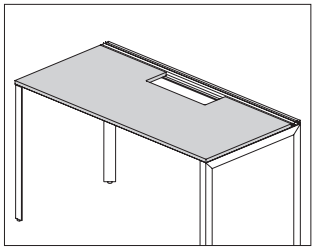

Product Information

Description

This squared-edge surface attaches to 1 set of primary beams when using a performance rail. It can be used in a table, single-sided bench, or back-to-back bench application. It has a laminate top and thermoplastic edge, laminate top with a thermoplastic backed plywood edge, or veneer top and edge. Surface is 1⅛″ thick. It is available with or without an access door cutout which provides access to the power and data channel.

Notes

Gap between back edge of surface and performance rail is 0.6″ deep and runs the full width of the surface.

For surfaces with access cutout (C, D, L, R), order access door (GNPD.) separately.

Specify attachment hardware kit separately.

For fixed attachment of beams up to 78″ wide, order hardware pack (GNHPF.) separately; for 84″-wide and 96″-wide beams, order hardware pack (**GNHOF.**) separately.

For quick release attachment, order the quick release attachment hardware pack (GNHPA.) in addition to the fixed attachment hardware pack (GNHPF.) separately.

Sliding surface attachment is available for 24″- or 30″-deep surfaces; order rectangular primary surface sliding hardware pack (GNHRS.) separately.

Attaching clamp-mounted components to back edge of a sliding surface may result in reduced surface extension.

Access door cutouts specified on left side (L) or right side (R) are located along the back edge of the surface at a fixed distance from the left or right end.

Dimensions

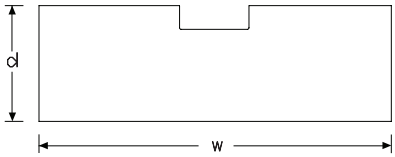

For 42″–96″ wide, access door cutout centered

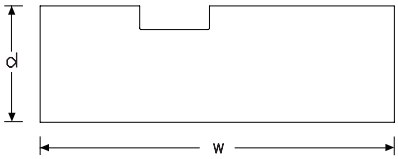

For 54″–78″ wide, access door cutout left side

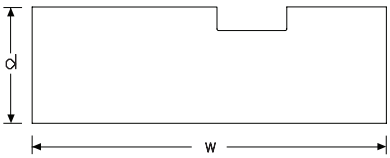

For 54″–78″ wide, access door cutout right side

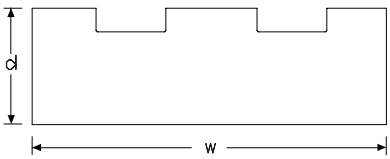

For 84″ and 96″ wide, two cutouts

Specification Information

Step 1.

GN A

Step 2. Type

TRR. rectangular primary surface for use with performance rail A

Step 3. Depth

24 24″ deep A
30 30″ deep A

Step 4. Width

42 42″ wide A
48 48″ wide A
54 54″ wide A
60 60″ wide A
66 66″ wide A
72 72″ wide A
78 78″ wide A
84 84″ wide A
96 96″ wide A

Step 5. Access Detail

For 42″ wide (42) or 48″ wide (48)

N no access A
C access door cutout, centered A

For 54″ wide (54), 60″ wide (60), 66″ wide (66), 72″ wide (72), or 78″ wide (78)

N no access A
L access door cutout, left side A
R access door cutout, right side A
C access door cutout, centered A

For 84″ wide (84) or 96″ wide (96)

N no access A
C access door cutout, centered A
D two access door cutouts A

Step 6. Surface Material

L high-pressure laminate top/thermoplastic edge A
U high-pressure laminate/universal edge A
W veneer A
A high-pressure laminate top/thermoplastic edge with MicrobeCare™ A
B veneer with MicrobeCare™ A
C high-pressure laminate top/universal edge with MicrobeCare™ A

Prices for Steps 1-6.

		NL	NU	NW	NA	NB	NC
GNTRR.24	**42**	$259	259	414	314	472	314
	48	$278	278	453	361	536	361
	54	$305	305	498	387	580	387
	60	$329	329	539	412	620	412
	66	$359	359	593	441	676	441
	72	$388	388	645	473	728	473
	78	$442	442	734	548	839	548
	84	$498	498	826	601	930	601
	96	$539	539	898	642	1002	642
30	**42**	$298	296	475	353	530	350
	48	$321	321	522	404	604	404
	54	$350	350	574	435	655	435
	60	$380	380	626	464	708	464
	66	$423	423	687	506	770	506
	72	$453	453	746	536	830	536
	78	$514	514	852	617	956	617
	84	$574	574	960	676	1064	676
	96	$626	624	1046	730	1149	728

		LL	LU	LW	LA	LB	LC
GNTRR.24	**54**	$334	334	524	415	606	415
	60	$359	359	566	441	649	441
	66	$390	390	620	475	705	475
	72	$415	415	673	500	756	500
	78	$472	472	764	575	868	575
30	**54**	$380	380	605	464	689	464
	60	$410	410	655	491	739	491
	66	$453	453	716	536	800	536
	72	$484	484	778	566	863	566
	78	$543	543	883	648	986	648

		DL	DU	DW	DA	DB	DC
GNTRR.24	**84**	$554	554	883	658	986	658
	96	$600	600	954	702	1059	702
30	**84**	$635	635	1019	739	1124	739
	96	$684	684	1105	789	1208	789

		RL	RU	RW	RA	RB	RC
GNTRR.24	**54**	$334	334	524	415	606	415
	60	$359	359	566	441	649	441
	66	$390	390	620	475	705	475
	72	$415	415	673	500	756	500
	78	$472	472	764	575	868	575

30	**54**	$380	380	605	464	689	464
	60	$410	410	655	491	739	491
	66	$453	453	716	536	800	536
	72	$484	484	778	566	863	566
	78	$543	543	883	648	986	648
		CL	**CU**	**CW**	**CA**	**CB**	**CC**
GNTRR.24	**42**	$289	288	449	345	504	343
	48	$311	311	484	393	566	393
	54	$334	334	524	415	606	415
	60	$359	359	566	441	649	441
	66	$390	390	620	475	705	475
	72	$415	415	673	500	756	500
	78	$472	472	764	575	868	575
	84	$524	524	852	629	956	629
	96	$566	566	928	669	1031	669
30	**42**	$326	326	505	380	559	380
	48	$349	349	552	434	635	434
	54	$380	380	605	464	689	464
	60	$410	410	655	491	739	491
	66	$453	453	716	536	800	536
	72	$484	484	778	566	863	566
	78	$543	543	883	648	986	648
	84	$605	605	990	709	1094	709
	96	$654	654	1075	758	1178	758

Step 7. Surface Finish

For high-pressure laminate top/thermoplastic edge (L), high-pressure laminate/universal edge (U), high-pressure laminate top/thermoplastic edge with MicrobeCare™ (A), or high-pressure laminate top/universal edge with MicrobeCare™ (C)

125	natural maple (CP) A	+$0
126	natural cherry (CP) A	+$0
127	walnut (CP) A	+$0
139	light ash (CP) A	+$0
140	warm ash (CP) A	+$0
76	light brown walnut A	+$0
8Q	folkstone grey (CP) A	+$0
91	white (CP) A	+$0
98	studio white (CP) A	+$0
CL	cool grey neutral A	+$0
HF	inner tone light A	+$0
HP	light anigre A	+$0
LBA	clear on ash (CP) A	+$0
LBB	oak on ash (CP) A	+$0
LBC	walnut on ash (CP) A	+$0
LBF	neutral twill A	+$0
LBJ	graphite twill A	+$0
LBQ	white twill A	+$0
LBR	phantom ecru A	+$0
LBS	phantom cocoa A	+$0
LBU	medium matte walnut (CP) A	+$0
LBV	warm grey teak A	+$0
LT	light tone A	+$0
LU	soft white A	+$0
WL	warm stone (CP) A	+$0
WN	warm grey neutral A	+$0

For veneer (W) or veneer with MicrobeCare™ (B)

2U	light brown walnut A	+$55
40	dark brown walnut A	+$55
ET	clear on ash A	+$55
EU	oak on ash A	+$55
EV	walnut on ash A	+$55

Step 8. Edge Finish

For high-pressure laminate top/thermoplastic edge (L) or high-pressure laminate top/thermoplastic edge with MicrobeCare™ (A)

125	natural maple (CP) A	+$0
126	natural cherry (CP) A	+$0
127	walnut (CP) A	+$0
139	light ash (CP) A	+$0
140	warm ash (CP) A	+$0
G1	graphite (CP) A	+$0
UBK	ultra black (CP) A	+$0
76	light brown walnut A	+$0
8Q	folkstone grey (CP) A	+$0
91	white (CP) A	+$0
98	studio white (CP) A	+$0
CL	cool grey neutral A	+$0
HF	inner tone light A	+$0
HP	light anigre A	+$0
LBA	clear on ash (CP) A	+$0
LBR	phantom ecru A	+$0
LBS	phantom cocoa A	+$0
LBU	medium matte walnut (CP) A	+$0
LBV	warm grey teak A	+$0
LBB	oak on ash (CP) A	+$0
LBC	walnut on ash (CP) A	+$0
LBF	neutral twill A	+$0
LBJ	graphite twill A	+$0
LBQ	white twill A	+$0
LU	soft white A	+$0
WL	warm stone (CP) A	+$0
WN	warm grey neutral A	+$0

For high-pressure laminate/universal edge (U) or high-pressure laminate top/universal edge with MicrobeCare™ (C)

PLY	plywood edge A	+$50

Meeting End, Rectangular

GNTDG.
GNTDN.

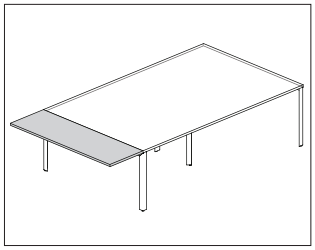

Product Information

Description

This 20″-deep squared-edge surface attaches to 2 sets of meeting end beams positioned at the end of a back-to-back bench application to create a meeting space. It has a laminate top with thermoplastic edge, laminate top with a thermoplastic backed plywood edge, or veneer top and edge. An optional grommet cut-out and grommet is available. Surface is 1⅛″ thick.

Notes

Grommet color matches the laminate color for solid color laminates, and is graphite for all other laminates and veneers.

For each meeting end surface, order 2 fixed attachment hardware packs (GNHPF.) separately.

Dimensions

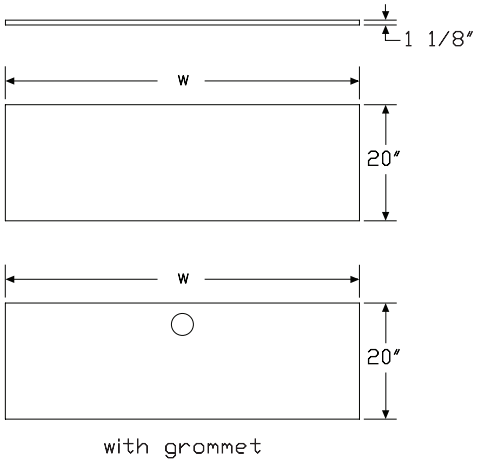

Specification Information

Step 1.

GN

Step 2. Type

TD rectangular meeting end

Step 3. Access Detail

N. no access cut-out
G. grommet

Step 4. Depth

20 20″ deep

Step 5. Width

48 48″ wide
60 60″ wide
72 72″ wide

Step 6. Attachment

F non-sliding

Step 7. Surface Material

L high-pressure laminate top/thermoplastic edge
W veneer
U high-pressure laminate/universal edge

Prices for Steps 1-7.

		FL	FW	FU
GNTDN.20	**48**	$245	413	245
	60	$285	511	285
	72	$351	606	351
GNTDG. 20	**48**	$274	440	274
	60	$315	539	315
	72	$380	635	380

Step 8. Surface Finish

For high-pressure laminate top/thermoplastic edge (L) or high-pressure laminate/universal edge (U)

125	natural maple (CP)	+$0
126	natural cherry (CP)	+$0
139	light ash (CP)	+$0
140	warm ash (CP)	+$0
76	light brown walnut	+$0
91	white (CP)	+$0
98	studio white (CP)	+$0
8Q	folkstone grey (CP)	+$0
CL	cool grey neutral	+$0
HF	inner tone light	+$0
HP	light anigre	+$0
LBA	clear on ash (CP)	+$0
LBR	phantom ecru	+$0
LBS	phantom cocoa	+$0
LBU	medium matte walnut (CP)	+$0
LBV	warm grey teak	+$0
LBB	oak on ash (CP)	+$0
LBC	walnut on ash (CP)	+$0
LBF	neutral twill	+$0
LBJ	graphite twill	+$0
LBQ	white twill	+$0
LU	soft white	+$0
WL	warm stone (CP)	+$0
WN	warm grey neutral	+$0

Wood Veneer

For veneer (W)

2U	light brown walnut	+$55
40	dark brown walnut	+$55
ET	clear on ash	+$55
EU	oak on ash	+$55
EV	walnut on ash	+$55

Step 9. Edge Finish

For high-pressure laminate top/thermoplastic edge (L)

125	natural maple (CP)	+$0
126	natural cherry (CP)	+$0
127	walnut (CP)	+$0
139	light ash (CP)	+$0
140	warm ash (CP)	+$0
G1	graphite (CP)	+$0
76	light brown walnut	+$0
8Q	folkstone grey (CP)	+$0
91	white (CP)	+$0
98	studio white (CP)	+$0
CL	cool grey neutral	+$0
LBA	clear on ash (CP)	+$0
LBR	phantom ecru	+$0
LBS	phantom cocoa	+$0
LBU	medium matte walnut (CP)	+$0
LBV	warm grey teak	+$0
LBB	oak on ash (CP)	+$0
LBC	walnut on ash (CP)	+$0
LBF	neutral twill	+$0
LBJ	graphite twill	+$0
LBQ	white twill	+$0
WL	warm stone (CP)	+$0
WN	warm grey neutral	+$0
HF	inner tone light	+$0
HP	light anigre	+$0
LU	soft white	+$0

For high-pressure laminate/universal edge (U)

PLY	plywood edge A	+$50

Hardware Pack, Fixed Surfaces

GNHDF.
GNHOF.
GNHPF.
GNHSF.

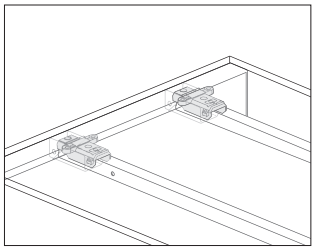

Product Information

Description

This hardware pack is required in order to connect a set of beams to a pair of Engage legs, and to provide a fixed attachment of a surface.

Notes

1 hardware pack is required for each beam kit specified. Meeting end surfaces (**GNTDG.**, GNTDN.) require an additional 2 rectangular primary hardware packs (GNHPF.) per surface.

For Primary Worksurface Rectangular (GNTRx.), Primary Worksurface Rectangular Performance Rail (GNTRR.) and Project Table Rectangular (GNTPx.), specify rectangular primary hardware pack (GNHPF.) for beams up to 78″ wide; for beams 84″ wide and wider specify rectangular primary (84″w and above) hardware pack (**GNHOF.**).

For quick release attachment, a quick release hardware pack (GNHPA., GNHDA.) can be added. Specify 1 hardware pack for each beam kit.

Specification Information

Step 1.

GNH

Step 2. Type

PF.	rectangular primary
OF.	rectangular primary (84″w and above)
DF.	120° - primary
SF.	return

Prices for Steps 1-2.

GNHPF.	$75
GNHOF.	$86
GNHDF.	$162
GNHSF.	$191

Hardware Pack, Quick Release Attachment

GNHDA.
GNHPA.

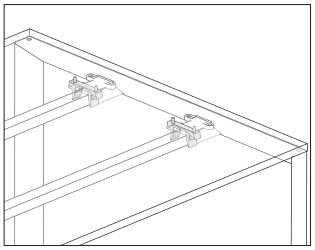

Product Information

Description

This hardware pack provides for the attachment and removal of surfaces without the use of any tools.

Notes

Specify 1 quick release hardware pack for each fixed attachment hardware pack (GNHDF., GNHPF., GNHSF.) specified.

Dimensions

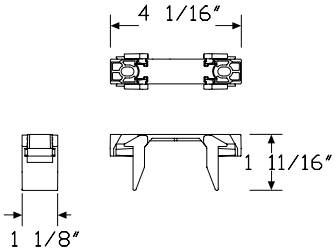

Specification Information

Step 1.

GNH

Step 2. Type

PA. rectangular surface
DA. 120° surface

Prices for Steps 1-2.

GNHPA.	$26
GNHDA.	$42

Hardware Pack - Sliding - Rectangular Primary

GNHRS.

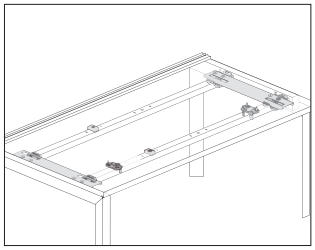

Product Information

Description

This hardware pack attaches a 24″-deep or 30″-deep rectangular primary surface to a set of beams when using a performance rail or when using a non-rail surface with the generic attachment option. It allows the surface to slide, providing access to a cable management tray.

Notes

Specify 1 hardware pack for each sliding surface.

Attaching clamp-mounted components to the back edge of a sliding surface may result in reduced surface extension.

Dimensions

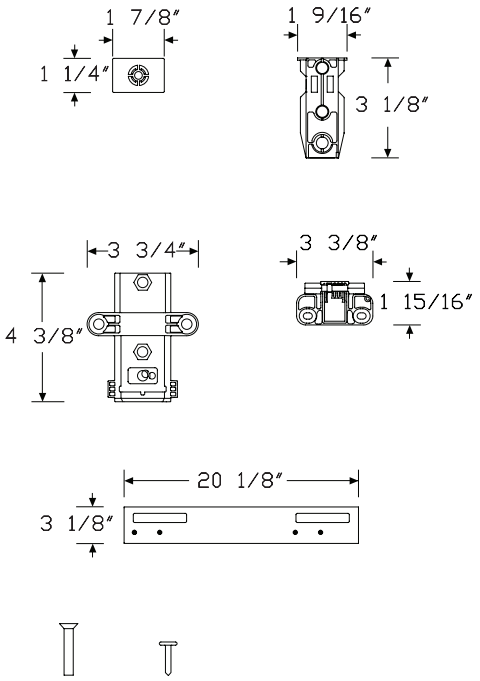

Specification Information

Step 1.

GNHRS. A

Step 2. Depth

24	for 24″-deep surface	A
30	for 30″-deep surface	A

Prices for Steps 1-2.

GNHRS.	**24**	$276
	30	$276

Pari Screen, Desk Up, Performance Rail GNSDRT

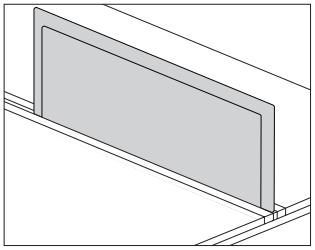

Product Information

Description

This tackable frameless fabric screen attaches to a Layout Studio® performance rail and provides boundary above a surface at the back edge of the work surface. It comes with an alignment clip to align 2 screens when placed side-by-side. Attachment hardware included.

Notes

Screen width does not need to match performance rail width.

When using 78″-wide performance rail, specify 2 39″-wide screens to provide full screen coverage. When using 84″-wide rail, specify 2 42″-wide screens. When using 96″-wide rail, specify 2 48″-wide screens.

Screen attaches to performance rail with provided hardware. No additional hardware is required.

Screen is shared in back-to-back applications.

All fabric is railroaded.

Screen accepts Customer's Own Material (COM). Yardage is estimated for nondirectional 54″-wide fabrics.

Width—Yardage
36—1.32
39—1.42
42—1.51
48—1.70
54—1.89
60—2.08
66—2.27
72—2.46

For information on multiple quantities or directional fabrics, contact COM Department. See Order Information in Appendices.

Dimensions

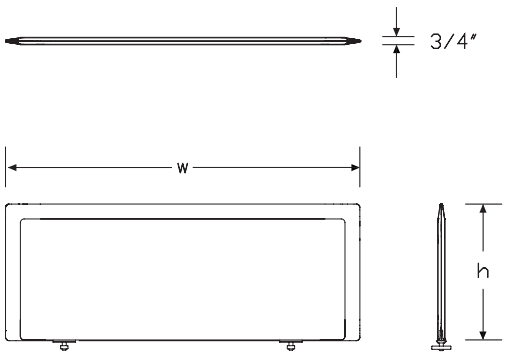

Specification Information

Step 1.

GN A

Step 2. Type

SD desk up A

Step 3. Configuration

R performance rail attachment A

Step 4. Edge

T. Pari screen A

Step 5. Height

42 42″ high A
46 46″ high A

Step 6. Width

36 36″ wide A
39 39″ wide A
42 42″ deep A
48 48″ wide A
54 54″ wide A
60 60″ wide A
66 66″ wide A
72 72″ wide A

Prices for Steps 1-6.

		36	39	42	48	54	60
GNSDRT.	**42**	$633	684	712	754	808	866
	46	$655	707	734	772	830	892

		66	72
GNSDRT.	**42**	$925	969
	46	$947	1002

Step 7. Surface Finish

Price Category 1	+$0
Price Category 2	+$14
Price Category 3	+$24
Price Category 4	+$38
Price Category 5	+$111
Price Category B	+$79
Price Category C	+$107
Price Category E	+$163

Flat Edge Screen, Desk Up, Performance Rail

GNSDRS

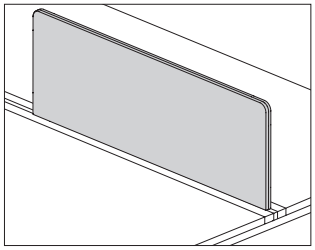

Product Information

Description

This tackable frameless fabric screen attaches to a Layout Studio® performance rail and provides boundary above a surface at the back edge of the work surface. It has a flat edge and comes with an alignment clip to align 2 screens when placed side-by-side. Attachment hardware included.

Notes

Screen width does not need to match performance rail width.

When using 78″-wide performance rail, specify 2 39″-wide screens to provide full screen coverage. When using 84″-wide rail, specify 2 42″-wide screens. When using 96″-wide rail, specify 2 48″-wide screens.

Screen attaches to performance rail with provided hardware. No additional hardware is required.

Screen is shared in back-to-back applications.

All fabric is railroaded.

Screen accepts Customer's Own Material (COM). Yardage is estimated for nondirectional 54″-wide fabrics.

Width—Yardage
36—1.32
39—1.42
42—1.51
48—1.70
54—1.89
60—2.08
66—2.27
72—2.46

For information on multiple quantities or directional fabrics, contact COM Department. See Order Information in Appendices.

Dimensions

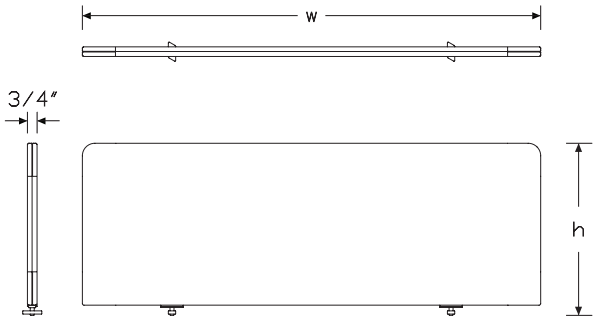

Specification Information

Step 1.

GN A

Step 2. Type

SD desk up A

Step 3. Configuration

R performance rail attachment A

Step 4. Edge

S. tackable fabric with flat edge A

Step 5. Height

42 42″ high A
46 46″ high A

Step 6. Width

36 36″ wide A
39 39″ wide A
42 42″ wide A
48 48″ wide A
54 54″ wide A
60 60″ wide A
66 66″ wide A
72 72″ wide A

Prices for Steps 1-6.

		36	39	42	48	54	60
GNSDRS.	**42**	$390	411	434	453	475	493
	46	$411	434	453	473	499	522

		66	72
GNSDRS.	**42**	$523	551
	46	$543	585

Step 7. Surface Finish

Price Category 1	+$0
Price Category 2	+$14
Price Category 3	+$24
Price Category 4	+$38
Price Category 5	+$111
Price Category B	+$79
Price Category C	+$107
Price Category E	+$163

Glass Screen, Desk Up, Frameless, Performance Rail GNSDRG

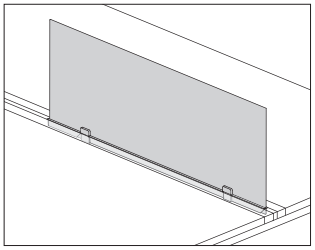

Product Information

Description

This frameless glass screen attaches to a Layout Studio® performance rail and provides boundary above a surface at the back edge of the work surface. Attachment hardware included.

Notes

Screen width does not need to match performance rail width.

Screen attaches to performance rail with provided hardware. No additional hardware is required.

Screen is shared in back-to-back applications.

For no glass-for customer's own insert, the custom insert can be the following thickness:

- 1/4″ option (NN)—0.219″-0.237″ thick
- 3/8″ option (N3)—0.361″-0.379″ thick

The insert height can be up to 17 1/2″ high.

Recommended materials are glass, acrylic, laminate, wood or materials that will remain straight over time.

Dimensions

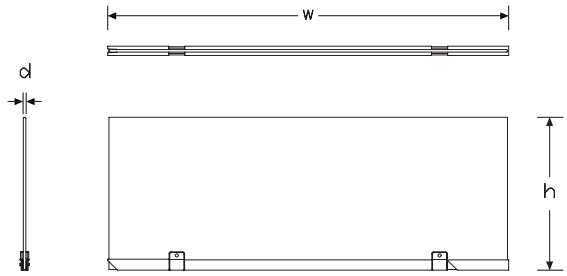

Specification Information

Step 1.

GN A

Step 2. Type

SD desk up A

Step 3. Configuration

R performance rail attachment A

Step 4. Material

G. glass A

Step 5. Height

42 42″ high A
46 46″ high A

Step 6. Width

36 36″ wide A
42 42″ wide A
48 48″ wide A
54 54″ wide A
60 60″ wide A
66 66″ wide A
72 72″ wide A
78 78″ wide A
84 84″ wide A
96 96″ wide A

Step 7. Surface Finish

TR clear glass - 1/4″ thick A
5A opal etched - 1/4″ thick A
NN no glass- for customer's own glass A
C3 clear glass - 3/8″ thick A
G3 opal glass - 3/8″ thick A
N3 no glass, for customer's own 3/8″ thick glass A

Glass Screen, Desk Up, Frameless, Performance Rail *continued*

Prices for Steps 1-7.

		TR	5A	NN	C3	G3	N3
GNSDRG. 42	**36**	$412	536	247	515	668	247
	42	$464	603	298	579	753	298
	48	$491	637	317	614	796	317
	54	$524	683	319	655	850	319
	60	$563	731	321	702	912	321
	66	$603	780	322	753	977	322
	72	$632	818	324	789	1023	324
	78	$665	865	325	830	1079	325
	84	$702	912	326	876	1138	326
	96	$766	995	375	956	1242	375
46	**36**	$426	553	247	534	691	247
	42	$479	619	298	598	774	298
	48	$506	654	317	631	816	317
	54	$541	702	319	676	876	319
	60	$580	754	321	724	941	321
	66	$616	801	322	769	998	322
	72	$652	844	324	813	1057	324
	78	$689	897	325	857	1116	325
	84	$727	944	326	906	1176	326
	96	$791	1028	375	984	1281	375

Layout Studio® Laminate Screen, Desk Up, Performance Rail

GNSDRL
GNSDRU

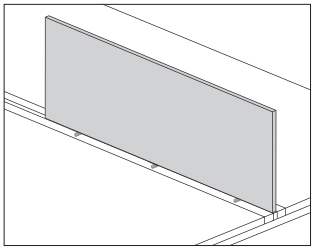

Product Information

Description

This laminate screen attaches to a Layout Studio® performance rail and provides boundary above a surface at the back edge of the work surface. Attachment hardware included.

Notes

Screen width does not need to match performance rail width.

When using 78″-wide performance rail, specify 2 39″-wide screens to provide full screen coverage. When using 84″-wide rail, specify 2 42″-wide screens. When using 96″-wide rail, specify 2 48″-wide screens.

Screen attaches to performance rail with included hardware. No additional hardware is needed.

Screen is shared in back-to-back applications.

To align screens in a run and display name tags, order Ubi nametag clip (Y1121.) separately and place over the seam between laminate screens.

Dimensions

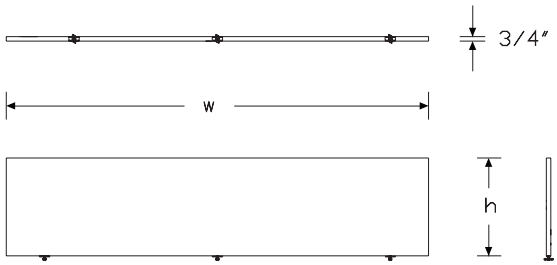

Specification Information

Step 1.

GN A

Step 2. Type

SD desk up A

Step 3. Configuration

R performance rail attachment A

Step 4. Surface Material

L. high-pressure laminate/thermoplastic edge A
U. high-pressure laminate/universal edge A

Step 5. Height

42 42″ high A
46 46″ high A

Step 6. Width

36 36″ wide A
39 39″ wide A
42 42″ wide A
48 48″ wide A
54 54″ wide A
60 60″ wide A
66 66″ wide A
72 72″ wide A

Prices for Steps 1-6.

		36	39	42	48	54	60
GNSDRL.	**42**	$300	315	329	346	360	377
	46	$324	340	353	371	385	402

		66	72
GNSDRL.	**42**	$390	405
	46	$413	427

GNSDRU.	**42**	$300	315	329	346	360	377
	46	$324	340	353	371	385	402

		66	72
GNSDRU.	**42**	$390	405
	46	$413	427

Step 7. Grain Direction

For 36″ wide (36), 39″ wide (39), 42″ wide (42), 48″ wide (48), 54″ wide (54), or 60″ wide (60)

VTG	vertical grain A	+$0
HRG	horizontal grain A	+$0

For 66″ wide (66) or 72″ wide (72)

HRG	horizontal grain A	+$0

Step 8. Surface Finish

125	natural maple (CP) A	+$0
126	natural cherry (CP) A	+$0
127	walnut (CP) A	+$0
139	light ash (CP) A	+$0
140	warm ash (CP) A	+$0
HF	inner tone light A	+$0
LT	light tone A	+$0
ZZ	open line high-pressure laminate (nonstandard) A	+$200
76	light brown walnut A	+$0
8Q	folkstone grey (CP) A	+$0
91	white (CP) A	+$0
98	studio white (CP) A	+$0
CL	cool grey neutral A	+$0
HP	light anigre A	+$0
LBA	clear on ash (CP) A	+$0
LBR	phantom ecru A	+$0
LBS	phantom cocoa A	+$0
LBU	medium matte walnut (CP) A	+$0
LBV	warm grey teak A	+$0
LBB	oak on ash (CP) A	+$0
LBC	walnut on ash (CP) A	+$0
LBF	neutral twill A	+$0
LBJ	graphite twill A	+$0
LBQ	white twill A	+$0
LU	soft white A	+$0
WL	warm stone (CP) A	+$0
WN	warm grey neutral A	+$0
X1	chalk white A	+$0

Step 9. Edge Finish

For high-pressure laminate/thermoplastic edge (L.)

125	natural maple (CP) A	+$0
126	natural cherry (CP) A	+$0
127	walnut (CP) A	+$0
139	light ash (CP) A	+$0
140	warm ash (CP) A	+$0
LT	light tone A	+$0
SG	slate grey A	+$0
X1	chalk white A	+$0

For high-pressure laminate/thermoplastic edge (L.)

76	light brown walnut A	+$0
8Q	folkstone grey (CP) A	+$0
91	white (CP) A	+$0
98	studio white (CP) A	+$0
CL	cool grey neutral A	+$0
HF	inner tone light A	+$0
HP	light anigre A	+$0
LBA	clear on ash (CP) A	+$0
LBR	phantom ecru A	+$0
LBS	phantom cocoa A	+$0
LBU	medium matte walnut (CP) A	+$0
LBV	warm grey teak A	+$0
LBB	oak on ash (CP) A	+$0
LBC	walnut on ash (CP) A	+$0
LBF	neutral twill A	+$0
LBJ	graphite twill A	+$0
LBQ	white twill A	+$0
LU	soft white A	+$0
WL	warm stone (CP) A	+$0
WN	warm grey neutral A	+$0

For high-pressure laminate/universal edge (U.)

PLY	plywood edge A	+$50

Screen - Modesty - Metal, Performance Rail-Attached

GNMRF.

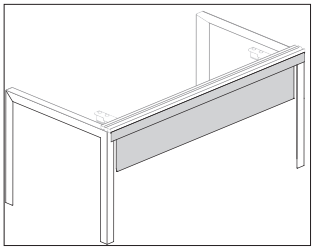

Product Information

Description

This painted metal modesty panel hangs below a single-sided performance rail and includes a painted trim piece that will finish off the back side of the performance rail. Attachment hardware included.

Notes

Width of modesty panel must match width of attached performance rail.

Modesty panel is 9″ high. Bottom of panel hangs approximately 11″ below the top of the surface.

Dimensions

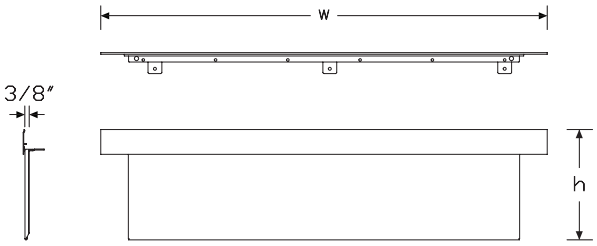

Specification Information

Step 1.

GN A

Step 2. Type

MR performance rail attached A

Step 3. Configuration

F. full module A

Step 4. Height

09 9″ tall A

Step 5. Width

42 42″ wide A
48 48″ wide A
54 54″ wide A
60 60″ wide A
66 66″ wide A
72 72″ wide A
78 78″ wide A
84 84″ wide A
96 96″ wide A

Prices for Steps 1-5.

	42	48	54	60	66	72
GNMRF.09	$248	263	277	292	307	321

	78	84	96
GNMRF.09	$334	349	378

Step 6. Surface Finish

Metallic Paint

613	silver (CP) A	+$0

Sand Texture Paint

91	white (CP) A	+$0
98	studio white (CP) A	+$0
BK	black A	+$0
DB3	glacier A	+$30
DN2	nightfall A	+$30
DR1	canyon A	+$30
G1	graphite (CP) A	+$0
OLF	olive A	+$30
UBK	ultra black (CP) A	+$0

Personal Side Screen, Delineation GNSPXT

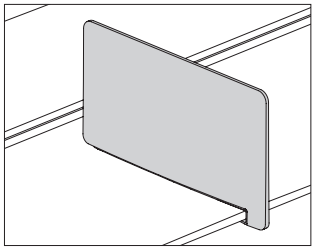

Product Information

Description

This tackable frameless fabric screen provides boundary between workers seated side-by-side, and attaches to the front edge of a squared-edge Layout Studio® surface. It has an edge profile that is complementary to both Pari and flat-edge screens.

Notes

Screen is 13″H×22″D.

Mid-run (M) screen can be placed anywhere along the front edge of a back-to-back application, except directly above an end leg, or above an intermediate leg on a single-sided application. Screen can be moved by the user.

All fabric is railroaded.

Dimensions

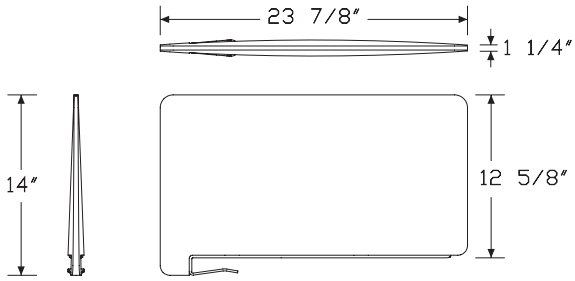

Specification Information

Step 1.

GN A

Step 2. Type

SP	delineation A	

Step 3. Configuration

XT.	frameless fabric A	

Step 4. Placement

M	mid-run on back-to-back applications A	

Prices for Steps 1-4.

GNSPXT. M	$492

Step 5. Bracket Finish

Metallic Paint

613	silver (CP) A	+$0

Sand Texture Paint

UBK	ultra black (CP) A	+$0
91	white (CP) A	+$0
98	studio white (CP) A	+$0
BK	black A	+$0
G1	graphite (CP) A	+$0

Step 6. Surface Finish

Price Category 5	+$44
Price Category 1	+$0
Price Category 2	+$7
Price Category 3	+$12
Price Category 4	+$25

Gallery Panel, Leg-Attached GNSTA.

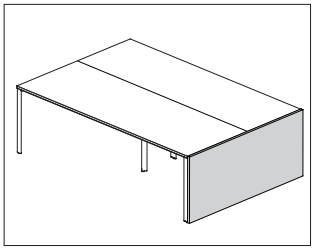

Product Information

Description

This gallery panel attaches to an Engage desk end leg. It has a laminate surface with thermoplastic edge, laminate surface with a thermoplastic backed plywood edge, or veneer surface and edge. Attachment hardware included.

Notes

Top of 29″-high panel aligns with top of a primary surface; top of 42″- and 46″-high panels align with top of a desk up or modesty screen.

All gallery panels are nonhanded. 24″- and 30″-wide panels will work on both right-hand and left-hand single desk end legs.

Grain direction is vertical on veneer, wood-grain and directional laminates for 24″-60″ widths.

Wood-grain and directional laminates are not available on 72″-wide gallery panels and are not a recommended application when using ZZ open line wood-grain or directional laminates.

For additional sizes, see Vary Easy Program in appendices.

Dimensions

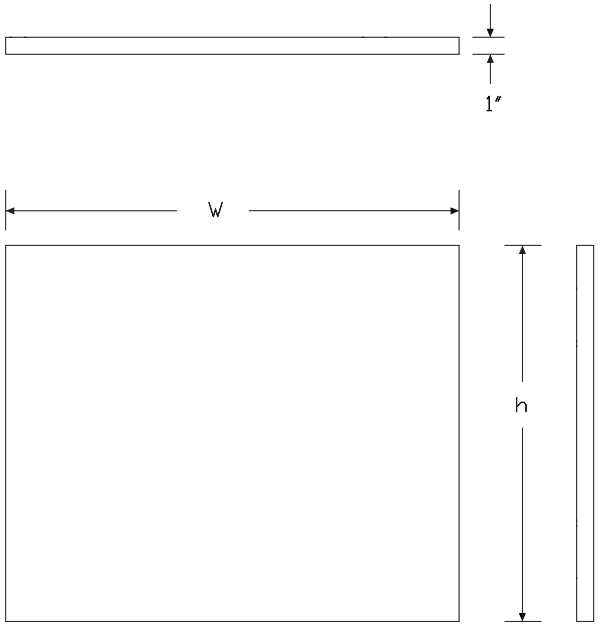

Specification Information

Step 1.

GN

Step 2. Type

ST gallery panel

Step 3. Configuration

A. leg-attached

Step 4. Height

29 29″ high
42 42″ high
46 46″ high

Step 5. Width

24 24″ wide
30 30″ wide
36 36″ wide
48 48″ wide
60 60″ wide
72 72″ wide

Step 6. Surface Material

L high-pressure laminate top/thermoplastic edge
W veneer
U high-pressure laminate/universal edge

Prices for Steps 1-6.

			L	W	U
GNSTA.	**29**	**24**	$337	732	337
		30	$372	806	372
		36	$403	875	403
		48	$522	1142	522
		60	$645	1413	645
		72	$769	1685	769
	42	**24**	$396	863	396
		30	$423	925	423
		36	$466	1017	466
		48	$629	1371	629
		60	$775	1699	775
		72	$927	2025	927

46	**24**	$406	882	406
	30	$437	956	437
	36	$499	1090	499
	48	$654	1433	654
	60	$814	1782	814
	72	$969	2126	969

Step 7. Surface Finish

For 24″ wide (24), 30″ wide (30), 36″ wide (36), 48″ wide (48), or 60″ wide (60) with high-pressure laminate top/thermoplastic edge (L), or high-pressure laminate/universal edge (U)

125	natural maple (CP)	+$0
126	natural cherry (CP)	+$0
127	walnut (CP)	+$0
139	light ash (CP)	+$0
140	warm ash (CP)	+$0
76	light brown walnut	+$0
91	white (CP)	+$0
98	studio white (CP)	+$0
8Q	folkstone grey (CP)	+$0
CL	cool grey neutral	+$0
HF	inner tone light	+$0
HP	light anigre	+$0
LBA	clear on ash (CP)	+$0
LBR	phantom ecru	+$0
LBS	phantom cocoa	+$0
LBU	medium matte walnut (CP)	+$0
LBV	warm grey teak	+$0
LBB	oak on ash (CP)	+$0
LBC	walnut on ash (CP)	+$0
LBF	neutral twill	+$0
LBJ	graphite twill	+$0
LBQ	white twill	+$0
LU	soft white	+$0
WL	warm stone (CP)	+$0
WN	warm grey neutral	+$0

Wood Veneer

For veneer (W)

2U	light brown walnut	+$55
40	dark brown walnut	+$55
ET	clear on ash	+$55
EU	oak on ash	+$55
EV	walnut on ash	+$55

Solid-Color Laminate Top/Thermoplastic Edge

For 72″ wide (72) with high-pressure laminate top/thermoplastic edge (L), or high-pressure laminate/universal edge (U)

8Q	folkstone grey (CP)	+$0
91	white (CP)	+$0
98	studio white (CP)	+$0
WL	warm stone (CP)	+$0
WN	warm grey neutral	+$0

Step 8. Bracket Finish

Metallic Paint

613	silver (CP)	+$0

Sand Texture Paint

91	white (CP)	+$0
98	studio white (CP)	+$0
BK	black	+$0
G1	graphite (CP)	+$0
UBK	ultra black (CP)	+$0

Step 9. Edge Finish

For 24″ wide (24), 30″ wide (30), 36″ wide (36), 48″ wide (48), 60″ wide (60), or 72″ wide (72) with high-pressure laminate top/thermoplastic edge (L)

125	natural maple (CP)	+$0
126	natural cherry (CP)	+$0
127	walnut (CP)	+$0
139	light ash (CP)	+$0
140	warm ash (CP)	+$0
G1	graphite (CP)	+$0
76	light brown walnut	+$0
8Q	folkstone grey (CP)	+$0
91	white (CP)	+$0
98	studio white (CP)	+$0
CL	cool grey neutral	+$0
HF	inner tone light	+$0
HP	light anigre	+$0
LBA	clear on ash (CP)	+$0
LBR	phantom ecru	+$0
LBS	phantom cocoa	+$0
LBU	medium matte walnut (CP)	+$0
LBV	warm grey teak	+$0
LBB	oak on ash (CP)	+$0
LBC	walnut on ash (CP)	+$0
LBF	neutral twill	+$0
LBJ	graphite twill	+$0
LBQ	white twill	+$0
LU	soft white	+$0
WL	warm stone (CP)	+$0
WN	warm grey neutral	+$0

For high-pressure laminate/universal edge (U)

PLY	plywood edge A	+$50

Pari Screen, End of Run GNSFXT

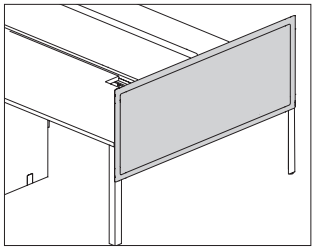

Product Information

Description

This tackable frameless fabric screen attaches to the outside of a Layout Studio® double end leg and provides boundary above and slightly below a surface at the end of a bench or table. Attachment hardware included.

Notes

Screens attach to Layout Studio infrastructure with included hardware; no additional attaching hardware is required.

Screen width must match the depth of leg next to which it will be placed.

All fabric is railroaded.

Screen accepts Customer's Own Material (COM). Yardage is estimated for nondirectional 54″-wide fabrics.

Width—Yardage

48—1.75

60—2.10

For information on multiple quantities or directional fabrics, contact COM Department. See Order Information in Appendices.

Dimensions

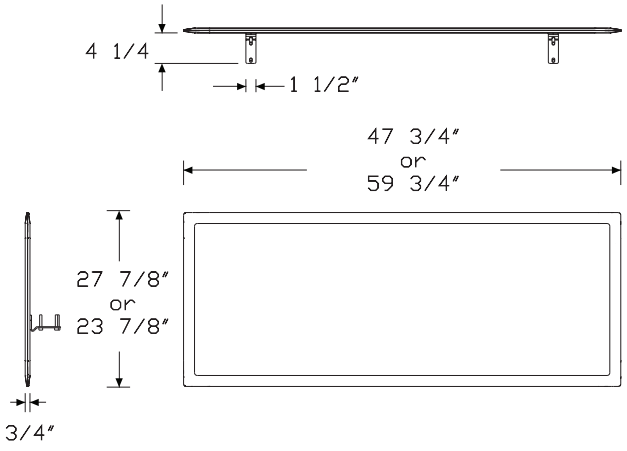

Specification Information

Step 1.

GNSFXT. A

Step 2. Height

42	42″ high	A
46	46″ high	A

Step 3. Width

48	48″ wide	A
60	60″ wide	A

Prices for Steps 1-3.

		48	**60**
GNSFXT.	**42**	$901	1003
	46	$986	1103

Step 4. Bracket Finish

Metallic Paint

613	silver (CP) A	+$0

Sand Texture Paint

91	white (CP) A	+$0
98	studio white (CP) A	+$0
BK	black A	+$0
G1	graphite (CP) A	+$0
UBK	ultra black (CP) A	+$0

Step 5. Surface Finish

Price Category 1	+$0
Price Category 2	+$18
Price Category 3	+$41
Price Category 4	+$70
Price Category 5	+$105
Price Category B	+$76
Price Category C	+$103
Price Category E	+$157

Flat Edge Screen, End of Run GNSFXS

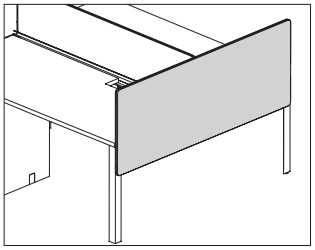

Product Information

Description

This tackable frameless fabric screen attaches to the outside of a Layout Studio® double end leg and provides boundary above and slightly below a surface at the end of a bench or table. Attachment hardware included.

Notes

Screens attach to Layout Studio infrastructure with included hardware; no additional attaching hardware is required.

Screen width must match the depth of leg next to which it will be placed.

All fabric is railroaded.

Screen accepts Customer's Own Material (COM). Yardage is estimated for nondirectional 54″-wide fabrics.

Width—Yardage

48—1.75

60—2.10

For information on multiple quantities or directional fabrics, contact COM Department. See Order Information in Appendices.

Dimensions

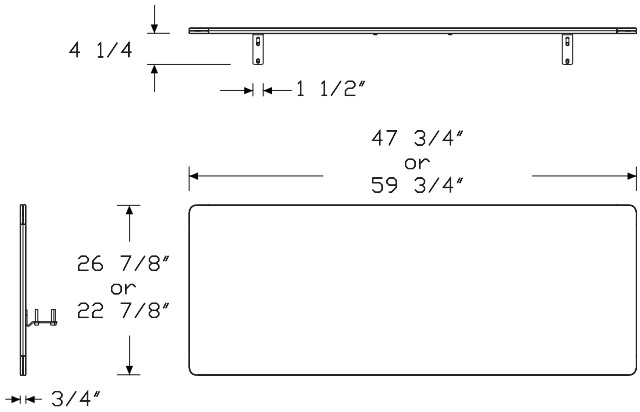

Specification Information

Step 1.

GNSFXS. A

Step 2. Height

42	42″ high	A
46	46″ high	A

Step 3. Width

48	48″ wide	A
60	60″ wide	A

Prices for Steps 1-3.

		48	**60**
GNSFXS.	**42**	$563	702
	46	$632	771

Step 4. Bracket Finish

Metallic Paint

613	silver (CP)	A	+$0

Sand Texture Paint

91	white (CP)	A	+$0
98	studio white (CP)	A	+$0
BK	black	A	+$0
G1	graphite (CP)	A	+$0
UBK	ultra black (CP)	A	+$0

Step 5. Surface Finish

Price Category 1	+$0
Price Category 2	+$18
Price Category 3	+$41
Price Category 4	+$70
Price Category 5	+$105
Price Category B	+$94
Price Category C	+$102
Price Category E	+$157

Pari Screen, Delineation, Performance Rail

GNSPXP

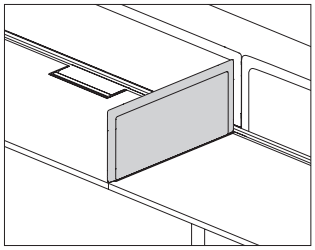

Product Information

Description

This tackable fabric screen provides boundary between workers seated side-by-side, and attaches to a squared-edge Layout Studio® surface when a performance rail is used.

Notes

All fabric is railroaded.

For screen attachment in middle of run, use either left-hand bracket (GNSD.PRxxEL) or right-hand bracket (GNSD.PRxxER), ordered separately.

Screen accepts Customer's Own Material (COM). Yardage is estimated for nondirectional 54″-wide fabrics.

Width—Yardage

24—0.92

30—1.10

For information on multiple quantities or directional fabrics, contact COM Department. See Order Information in Appendices.

Dimensions

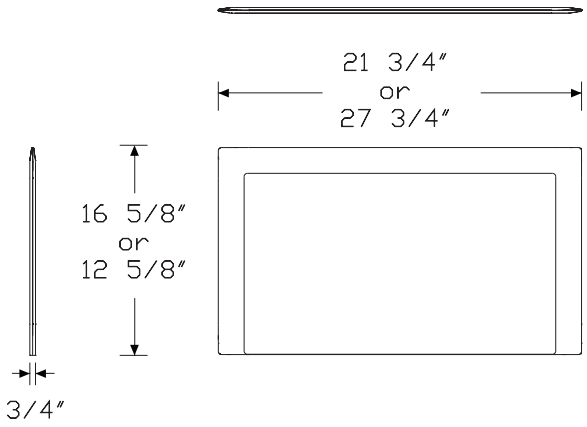

Specification Information

Step 1.

GNSPXP.R A

Step 2. Height

42 42″ high A

46 46″ high A

Step 3. Width

24 24″ wide A

30 30″ wide A

Step 4. Location

EL end-of-run, left-hand A

ER end-of-run, right-hand A

Prices for Steps 1-4.

			EL	ER
GNSPXP.R	**42**	**24**	$675	675
		30	$698	698
	46	**24**	$711	711
		30	$738	738

Step 5. Bracket Finish

613	silver (CP) A	+$0

Step 6. Surface Finish

Price Category 1	+$0
Price Category 2	+$10
Price Category 3	+$23
Price Category 4	+$38
Price Category 5	+$55
Price Category B	+$42
Price Category C	+$58
Price Category E	+$0

Flat Edge Screen, Delineation, Performance Rail

GNSPXS

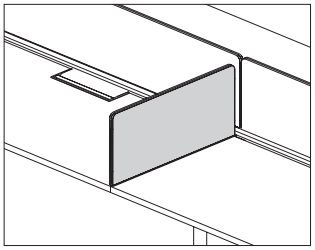

Product Information

Description

This tackable fabric screen provides boundary between workers seated side-by-side, and attaches to a squared-edge Layout Studio® surface when a performance rail is used.

Notes

All fabric is railroaded.

For screen attachment in middle of run, use either left-hand bracket (GNSD.SRxxEL) or right-hand bracket (GNSD.SRxxER), ordered separately.

Screen accepts Customer's Own Material (COM). Yardage is estimated for nondirectional 54″-wide fabrics.

Width—Yardage

24—0.92

30—1.10

For information on multiple quantities or directional fabrics, contact COM Department. See Order Information in Appendices.

Dimensions

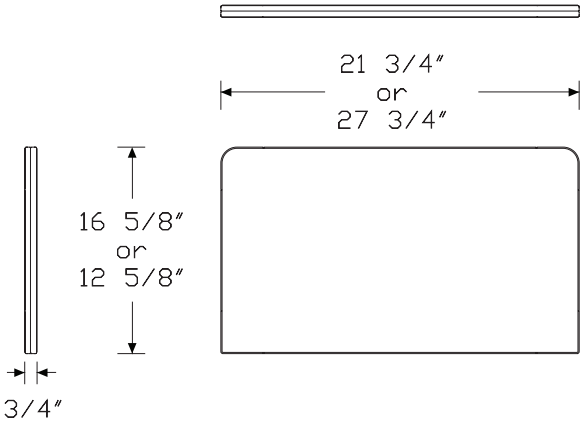

Specification Information

Step 1.

GNSPXS.R A

Step 2. Height

42 42″ high A

46 46″ high A

Step 3. Width

24 24″ wide A

30 30″ wide A

Step 4. Location

EL end-of-run, left-hand A

ER end-of-run, right-hand A

Prices for Steps 1-4.

			EL	ER
GNSPXS.R	**42**	**24**	$435	435
		30	$470	470
	46	**24**	$470	470
		30	$511	511

Step 5. Bracket Finish

613	silver (CP) A	+$0

Step 6. Surface Finish

Price Category 1	+$0
Price Category 2	+$7
Price Category 3	+$12
Price Category 4	+$25
Price Category 5	+$44
Price Category B	+$49
Price Category C	+$54
Price Category E	+$0

Screen Bracket, Delineation, Pari or Flat Edge GNSD.

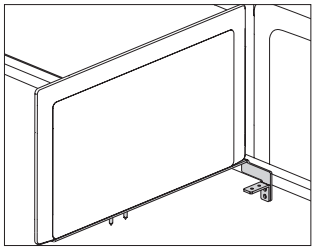

Product Information

Description

This hardware converts a Pari or flat edge delineation screen from left-hand or right-hand attachment to the opposite attachment.

Notes

For screen attachment in middle of run, use either left-hand (EL) or right-hand (ER) bracket.

Order Pari or flat edge delineation screen (GNSPXP., GNSPXP.R, GNSPXS., GNSPXS.R) separately.

Dimensions

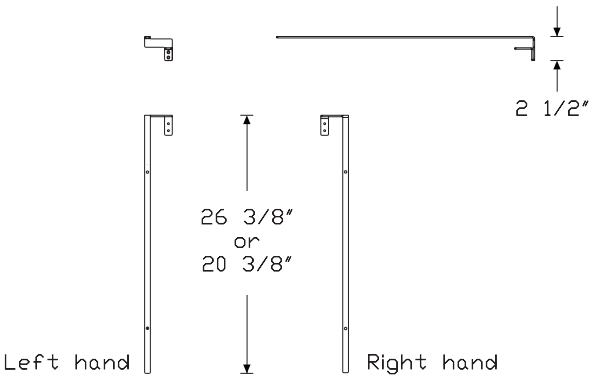

Pari screen with performance rail

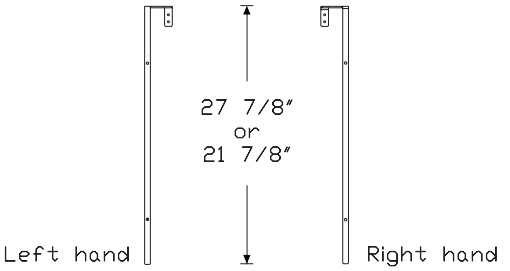

Flat edge screen with performance rail

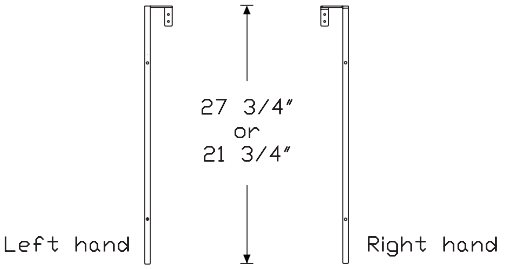

Pari screen, no performance rail

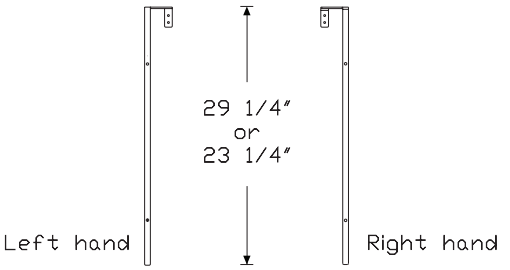

Flat edge screen, no performance rail

Screen Bracket, Delineation, Pari or Flat Edge *continued*

Specification Information

Step 1.

GN A

Step 2. Type

SD.P Pari delineation screen bracket A

SD.S flat edge delineation screen bracket A

Step 3. Performance Rail

R performance rail A

N no performance rail A

Step 4. Depth

24 24″ wide A

30 30″ wide A

Step 5. Location

EL end-of-run, left-hand A

ER end-of-run, right-hand A

Prices for Steps 1-5.

			EL	ER
GNSD.P	**R**	**24**	$83	83
		30	$83	83
	N	**24**	$83	83
		30	$83	83

			EL	ER
GNSD.S	**R**	**24**	$83	83
		30	$83	83
	N	**24**	$83	83
		30	$83	83

Step 6. Bracket Finish

613 silver (CP) A +$0

Individual Cubby L2EC.

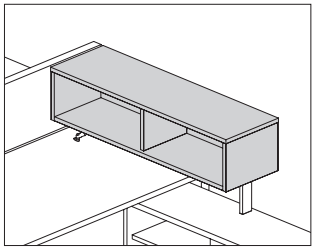

Product Information

Description

This all laminate or veneer cubby attaches to stanchions and provides open storage accessible from 1 side of the cubby. The inbound stanchion either sits on top of a work surface and attaches to the underside of the surface, or attaches to a Layout Studio® performance rail. The outbound stanchion rests on top of a 22″-high Tu® Wood credenza.

Notes

Surface-attached cubby cannot be used on a Layout Studio sliding surface.

Order stanchion kit for surface attachment (LSS.) or Layout Studio performance rail attachment (L2SS.) separately.

Can be used only in perpendicular application.

Order optional accessories separately:

- Tackboard (LLCT.)
- Whiteboard (LLCW.)
- Magnet board (LLCM.)

See Tu Wood Planning Guide for specific guidelines.

Dimensions

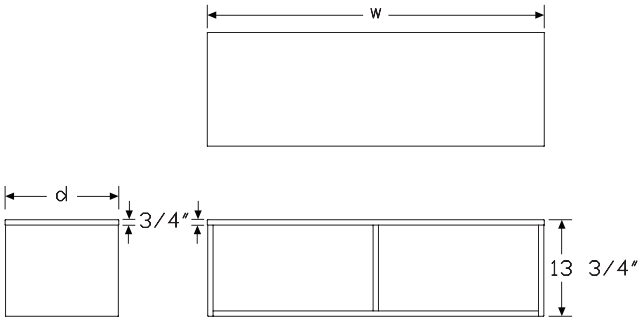

Specification Information

Step 1.

L2EC.

Step 2. Attachment

R Layout Studio performance rail attachment

S surface attachment

Step 3. Height

09 9.75″ high

13 13.75″ high

Step 4. Width

For Layout Studio performance rail attachment (R)

36 36″ wide

42 42″ wide

48 48″ wide

For surface attachment (S)

48 48″ wide

60 60″ wide

Step 5. Depth

12 12½″ deep

Step 6. Surface Material

For 36″ wide (36)

L thermally-fused laminate

For 48″ wide (48) or 42″ wide (42)

L thermally-fused laminate

For 60″ wide (60)

L thermally-fused laminate

Prices for Steps 1-6.

			3612L	4212L	6012L	4812L
L2EC.	**R**	**09**	$1260	1333	—	1408
		13	$1333	1408	—	1481
	S	**09**	—	—	$1555	1408
		13	—	—	$1629	1481

Step 7. Case Finish		
8Q	folkstone grey (CP)	+$0
91	white (CP)	+$0
98	studio white (CP)	+$0
CL	cool grey neutral	+$0
LU	soft white	+$0
WL	warm stone (CP)	+$0
WN	warm grey neutral	+$0
LBF	neutral twill	+$0
LBJ	graphite twill	+$0
LBQ	white twill	+$0
125	natural maple (CP)	+$0
126	natural cherry (CP)	+$0
127	walnut (CP)	+$0
139	light ash (CP)	+$0
140	warm ash (CP)	+$0
76	light brown walnut	+$0
HP	light anigre	+$0
LBA	clear on ash (CP)	+$0
LBR	phantom ecru	+$0
LBS	phantom cocoa	+$0
LBU	medium matte walnut (CP)	+$0
LBV	warm grey teak	+$0
LBB	oak on ash (CP)	+$0
LBC	walnut on ash (CP)	+$0

Shared Cubby L2EY.

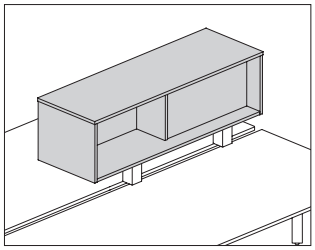

Product Information

Description

This all-laminate or veneer cubby has alternate-facing openings to provide storage to workers on both sides of the unit, either across from each other or side-by-side. Cubby is mounted using stanchions which are specified separately.

Notes

12½″-deep cubby used in a parallel application will attach to Layout Studio® beams. Single cubby requires 1 end stanchion kit (LSS.SE). Multiple cubbies will require the end stanchion kit, along with a shared stanchion (LSS.SM) wherever 2 cubbies meet.

12½″-deep cubby used in a perpendicular application will attach to the back edge of a work surface on one end of the cubby and rest on top of a 22″-high credenza on the other end of the cubby. Specify 1 credenza/work surface mounted stanchion kit (LSS.CD) for each cubby.

16″-deep cubby is 12″ deep on half and 3″ deep on the other half.

Only attaches to Layout Studio performance rail. To attach to performance rail, order stanchion kits (L2SS.) separately.

For 16″ deep cubby, 24″-wide and 30″-wide cubbies can only be used in a parallel application. 36″-72″ wide cubbies can be used in either a parallel or perpendicular application.

To cover interior septum on 1 side of 16″D×13½″H cubby (L2EY.x1613xx) with a painted insert, order insert (LLCM.Z13xxP) separately.

See Tu Wood Planning Guide for specific guidelines.

Dimensions

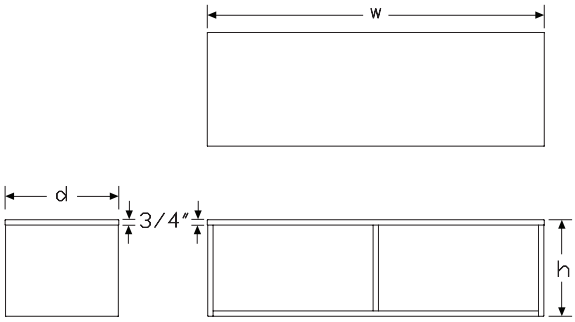

Specification Information

Step 1.

L2EY.

Step 2. Attachment

B parallel application, Layout Studio beam attachment
S perpendicular application, surface attachment
R Layout Studio performance rail attachment

Step 3. Depth

For parallel application, Layout Studio beam attachment (B) or perpendicular application, surface attachment (S)

12 12.5″ deep

For Layout Studio performance rail attachment (R)

16 16″ deep

Step 4. Height

For 12.5″ deep (12)

09 9.75″ high
13 13.75″ high

For 16″ deep (16)

13 13.75″ high

Step 5. Width

For Layout Studio performance rail attachment (R)

24 24″ wide
30 30″ wide
36 36″ wide
42 42″ wide
48 48″ wide

For perpendicular application, surface attachment (S)

48 48″ wide
60 60″ wide

For parallel application, Layout Studio beam attachment (B)

36 36″ wide
42 42″ wide
48 48″ wide
60 60″ wide
72 72″ wide

Step 6. Position	
L	opening left
R	opening right

Step 7. Surface Material	
For 24" wide (24), 36" wide (36), or 30" wide (30)	
L	thermally-fused laminate
For 48" wide (48) or 42" wide (42)	
L	thermally-fused laminate
For 60" wide (60)	
L	thermally-fused laminate
For 72" wide (72)	
L	thermally-fused laminate

Prices for Steps 1-7.

			0936LL	0936RL	0942LL	0942RL	0960LL	0960RL
L2EY.	**B**	**12**	$1177	1177	1322	1322	1566	1566
	S	**12**	—	—	—	—	$1566	1566

			0948LL	0948RL	0972LL	0972RL	1324LL	1324RL
L2EY.	**B**	**12**	$1385	1385	1748	1748	—	—
	S	**12**	$1397	1397	—	—	—	—
	R	**16**	—	—	—	—	$1180	1168

			1330LL	1330RL	1336LL	1336RL	1342LL	1342RL
L2EY.	**B**	**12**	—	—	$1242	1242	1388	1388
	R	**16**	$1326	1313	1471	1471	1621	1621

			1360LL	1360RL	1348LL	1348RL	1372LL	1372RL
L2EY.	**B**	**12**	$1631	1631	1451	1451	1831	1831
	S	**12**	$1631	1647	1462	1462	—	—
	R	**16**	—	—	$1767	1767	—	—

Step 8. Case Finish		
8Q	folkstone grey (CP)	+$0
91	white (CP)	+$0
98	studio white (CP)	+$0
CL	cool grey neutral	+$0
LU	soft white	+$0
WL	warm stone (CP)	+$0
WN	warm grey neutral	+$0
LBF	neutral twill	+$0
LBJ	graphite twill	+$0
LBQ	white twill	+$0
125	natural maple (CP)	+$0
126	natural cherry (CP)	+$0
127	walnut (CP)	+$0
139	light ash (CP)	+$0
140	warm ash (CP)	+$0
76	light brown walnut	+$0
HP	light anigre	+$0
LBA	clear on ash (CP)	+$0
LBR	phantom ecru	+$0
LBS	phantom cocoa	+$0
LBU	medium matte walnut (CP)	+$0
LBV	warm grey teak	+$0
LBB	oak on ash (CP)	+$0
LBC	walnut on ash (CP)	+$0

Suspended End Cubby L2ES.

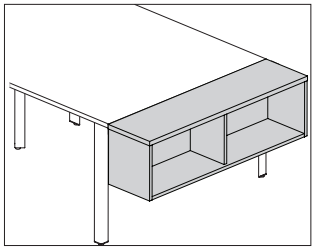

Product Information

Description

This all laminate or veneer cubby attaches to the outside of a Layout Studio® double desk end leg and provides open storage. The top of the cubby aligns with the adjacent surface(s). Each cubby has a center divider.

Notes

Specify cubby width to match depth of leg to which it will attach.

Order hardware kit (LSH.B) separately.

Grain direction is vertical on front and sides, and horizontal on top and back. Vertical grain direction on the top is available via Made-to-Measure or the Vary Easy Program.

See Tu Wood Planning Guide for specific guidelines.

Dimensions

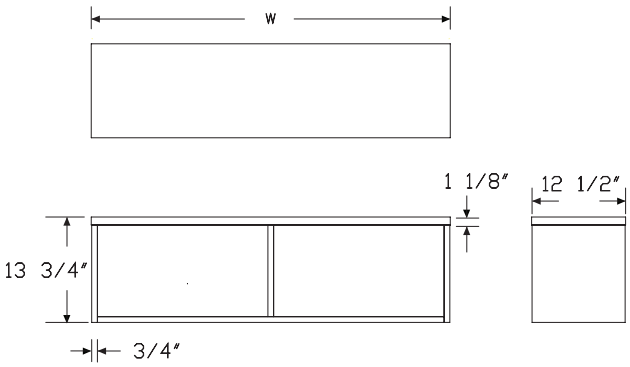

Specification Information

Step 1.

L2ES.

Step 2. Application

B	suspended below surface

Step 3. Height

13	13.75″ high

Step 4. Width

48	48″ wide
60	60″ wide

Step 5. Depth

12	12.5″ deep

Step 6. Surface Material

For 48″ wide (48)

L	thermally-fused laminate

For 60″ wide (60)

L	thermally-fused laminate

Prices for Steps 1-6.

	4812L	6012L
L2ES. B 13	$1471	1621

Step 7. Top Finish

Solid-Color Laminate

8Q	folkstone grey (CP)	+$0
91	white (CP)	+$0
98	studio white (CP)	+$0
CL	cool grey neutral	+$0
LU	soft white	+$0
WL	warm stone (CP)	+$0
WN	warm grey neutral	+$0

Twill Laminate

LBF	neutral twill	+$0
LBJ	graphite twill	+$0
LBQ	white twill	+$0

Wood-Grain Laminate		
125	natural maple (CP)	+$0
126	natural cherry (CP)	+$0
127	walnut (CP)	+$0
139	light ash (CP)	+$0
140	warm ash (CP)	+$0
76	light brown walnut	+$0
HP	light anigre	+$0
LBA	clear on ash (CP)	+$0
LBR	phantom ecru	+$0
LBS	phantom cocoa	+$0
LBU	medium matte walnut (CP)	+$0
LBV	warm grey teak	+$0
LBB	oak on ash (CP)	+$0
LBC	walnut on ash (CP)	+$0

Step 8. Case Finish

Solid-Color Laminate		
8Q	folkstone grey (CP)	+$0
91	white (CP)	+$0
98	studio white (CP)	+$0
CL	cool grey neutral	+$0
LU	soft white	+$0
WL	warm stone (CP)	+$0
WN	warm grey neutral	+$0

Twill Laminate		
LBF	neutral twill	+$0
LBJ	graphite twill	+$0
LBQ	white twill	+$0

Wood-Grain Laminate		
125	natural maple (CP)	+$0
126	natural cherry (CP)	+$0
127	walnut (CP)	+$0
139	light ash (CP)	+$0
140	warm ash (CP)	+$0
76	light brown walnut	+$0
HP	light anigre	+$0
LBA	clear on ash (CP)	+$0
LBR	phantom ecru	+$0
LBS	phantom cocoa	+$0
LBU	medium matte walnut (CP)	+$0
LBV	warm grey teak	+$0
LBB	oak on ash (CP)	+$0
LBC	walnut on ash (CP)	+$0

Stanchion Kit, Performance Rail L2SS.

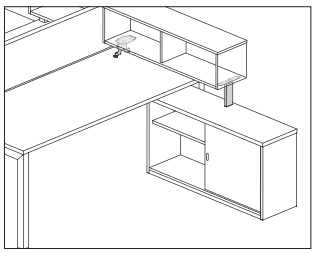

Product Information

Description

These stanchions elevate and support the shared cubby and individual cubby when attaching to a Layout Studio® performance rail. The center application kit has 1 stanchion, and the perpendicular application kit has 2 stanchions. Attachment hardware included.

Notes

Specify cubby (L2EY., L2EC.) separately.

The center application, rail-attached end stanchion (CE) supports 1 end of a single cubby.

The center application, rail-attached shared stanchion (CS) supports the end of 2 cubbies that are placed side-by-side.

The perpendicular application, rail and credenza supported stanchion kit (PRC) supports both ends of a cubby when placed perpendicular to a bench.

See Tu Wood Planning Guide for specific guidelines.

Dimensions

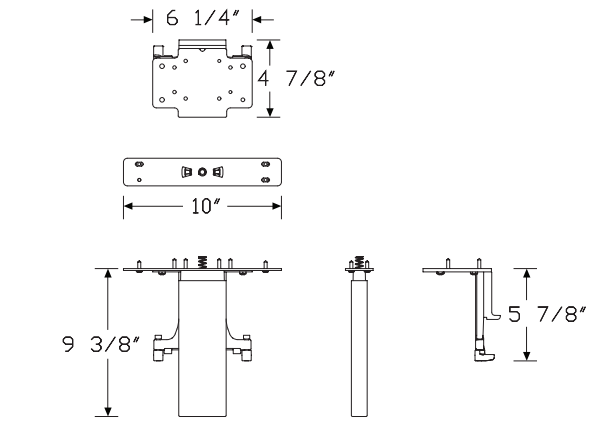

Perpendicular Rail and Credenza Support

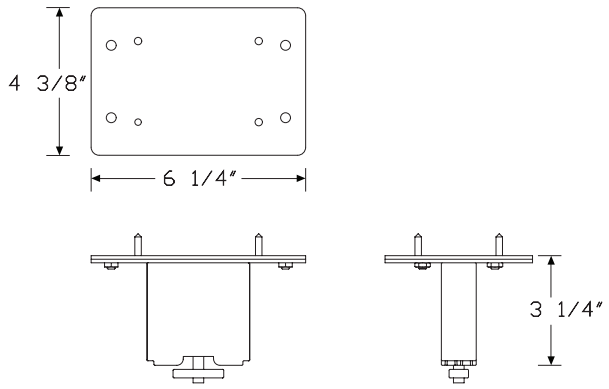

End Center Rail

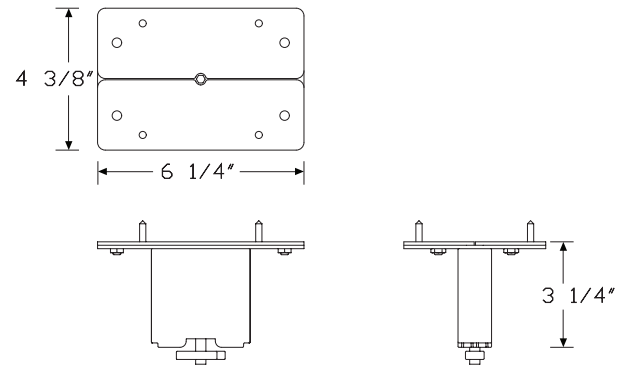

Shared Center Rail

Stanchion Kit, Performance Rail

continued

Specification Information

Step 1.

L2SS.

Step 2. Application

CE	center application, rail-attached, end
CS	center application, rail-attached, shared
PRC	perpendicular application, rail and credenza supported

Prices for Steps 1-2.

L2SS.	**CE**	$289
	CS	$296
	PRC	$753

Step 3. Finish

Metallic Paint

613	silver (CP)	+$0

Sand Texture Paint

91	white (CP)	+$0
BK	black	+$0
G1	graphite (CP)	+$0
UBK	ultra black (CP)	+$0

Smooth Paint

98	studio white (CP)	+$0

Suspended End Cubby Hardware Kit LSH.

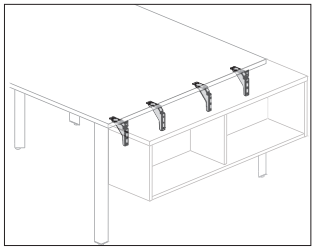

Product Information

Description

This hardware kit attaches a suspended end cubby to the outside of a Layout Studio® double desk end leg.

Notes

Order suspended end cubby (L2ES.B) separately.

See Tu Wood Planning Guide for specific guidelines.

Dimensions

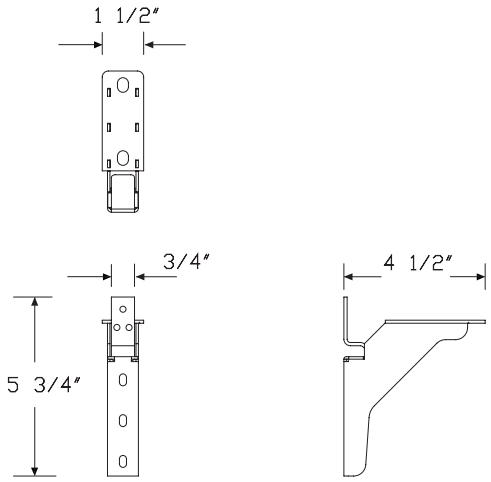

Specification Information

Step 1.

LSH. A

Step 2. Application

B	suspended below surface A	

Prices for Steps 1-2.

LSH.	**B**	$491

Step 3. Finish

Metallic Paint

613	silver (CP) A	+$0
SNA	satin aluminum A	+$10
SNB	satin bronze A	+$10
SNC	satin carbon A	+$10

Sand Texture Paint

91	white (CP) A	+$0
BK	black A	+$0
G1	graphite (CP) A	+$0
UBK	ultra black (CP) A	+$0

Smooth Paint

98	studio white (CP) A	+$0

Stanchion Kit LSS.

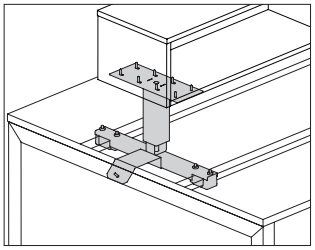

Product Information

Description

These stanchions elevate and support the laminate work surface cubby, individual cubby, and shared cubby. The shared mount kit has 1 shared stanchion, and the other kits have 2 stanchions. Attachment hardware included.

Notes

Specify cubby separately.

For use with laminate work surface cubby (L2WC.), specify work surface mounted stanchion (LSS.WS).

For use with individual cubby (L2EC.), specify credenza/work surface mounted stanchion (LSS.CD). The tall outbound stanchion has 1″ of adjustability.

The inbound stanchion included in each kit attaches to the underside of the work surface.

For use in Layout Studio® non-rail applications, specify end mount kit (LSS.SE) and the correct number of shared mount kits (LSS.SM) for the number of cubbies to be used.

See Tu Wood Planning Guide for specific guidelines.

Dimensions

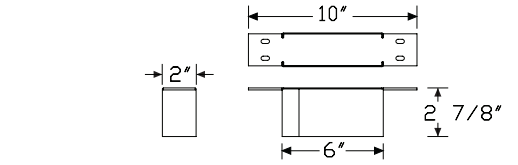

worksurface stanchion

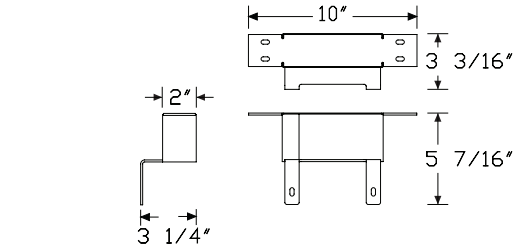

attached stanchion

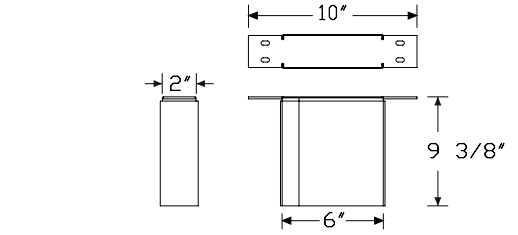

credenza stanchion

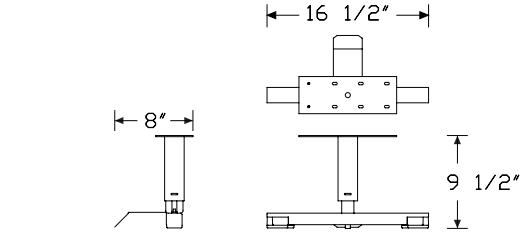

end mount for layout studio

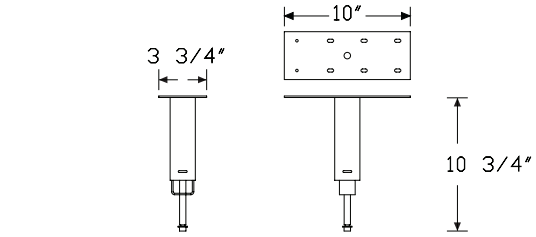

shared mount for layout studio

Specification Information

Step 1.

LSS.

Step 2. Width

SM	shared mount for layout studio
WS	work surface mounted
CD	credenza/work surface mounted
SE	end mount for layout studio

Prices for Steps 1-2.

LSS.	**SM**	$433
	WS	$486
	CD	$581
	SE	$978

Step 3. Finish

Metallic Paint

613	silver (CP)	+$0
SNA	satin aluminum	+$10
SNB	satin bronze	+$10
SNC	satin carbon	+$10

Sand Texture Paint

91	white (CP)	+$0
BK	black	+$0
G1	graphite (CP)	+$0
UBK	ultra black (CP)	+$0

Storage Attachment Kit, End Leg L2SL.

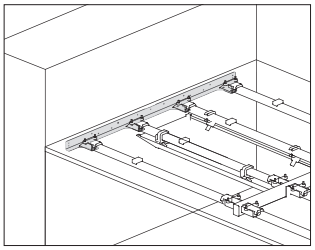

Product Information

Description

This hardware kit attaches Layout Studio® beams to a Tu® Wood end-of-run storage unit to allow the storage unit to replace a Layout Studio double end leg. The kit is available for use with a 48″-wide or a 60″-wide freestanding storage case. Finish is cool grey neutral.

Notes

To replace a Layout Studio double leg with a storage unit, order a Tu Wood end-of-run cabinet (L2ER.) separately.

Specify storage base option to match base option on storage unit.

See Tu Wood Planning Guide for specific guidelines.

Dimensions

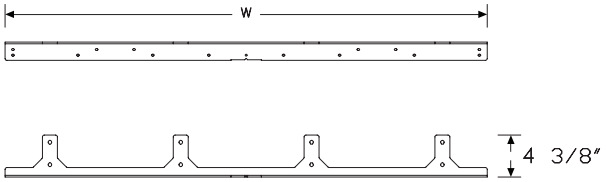

Specification Information

Step 1.

L2SL. A

Step 2. Depth

48	48″ double end leg A	
60	60″ double end leg A	

Prices for Steps 1-2.

L2SL.	**48**	$464
	60	$499

Step 3. Storage Base Option

1	base A	+$0
3	base with fronts to floor A	+$0
5	foot A	+$0
9	c-foot A	+$0

Shared Cubby Insert LLCM.

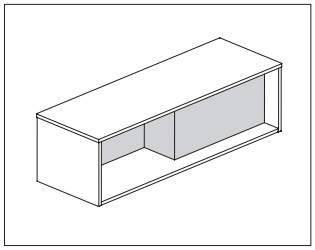

Product Information

Description

This painted metal insert is placed inside a 16″-deep shared cubby to completely cover the laminate septum on 1 side of the cubby. Attachment hardware included.

Notes

To cover both sides of a shared cubby septum, specify 2 inserts.

Paint finish is smooth.

Dimensions

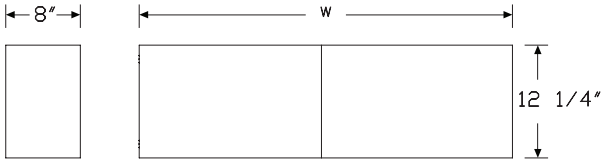

Specification Information

Step 1.

LLCM. A

Step 2. Type

Z 16″ deep shared cubby insert A

Step 3. Height

13 13.75″ high A

Step 4. Width

24 24″ wide A
30 30″ wide A
36 36″ wide A
42 42″ wide A
48 48″ wide A

Step 5. Surface Material

P painted metal A

Prices for Steps 1-5.

	24P	30P	36P	42P	48P
LLCM. Z 13	$346	369	390	412	432

Step 6. Finish

Metallic Paint

611	beige mist metallic (CP) A	+$0
613	silver (CP) A	+$0
SNA	satin aluminum A	+$10
SNB	satin bronze A	+$10
SNC	satin carbon A	+$10

Sand Texture Paint

BK	black A	+$0
UBK	ultra black (CP) A	+$0

Smooth Paint

8Q	folkstone grey (CP) A	+$0
91	white (CP) A	+$0
98	studio white (CP) A	+$0
G1	graphite (CP) A	+$0
WL	warm stone (CP) A	+$0

Engage Leg, Desk End, Single

GNLFEL
GNLFER

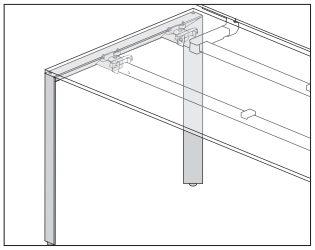

Product Information

Description

These single desk end legs provide support for individual tables or the ends of single-sided benches and returns. These fixed height legs provide 1¾″ of leveling adjustment.

Notes

Size of legs must match the depth of the surface being supported.

Dimensions

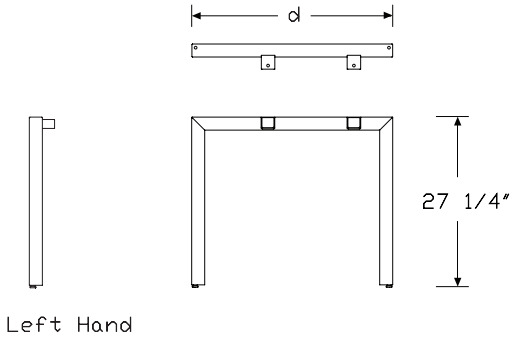

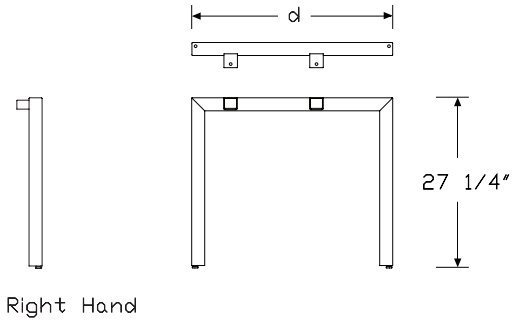

Specification Information

Step 1.

GN

Step 2. Leg Type

LF	fixed height

Step 3. Application

EL.	left hand
ER.	right hand

Step 4. Depth

24	24″ deep
30	30″ deep
36	36″ deep

Prices for Steps 1-4.

GNLFEL.	**24**	$400
	30	$406
	36	$411
GNLFER.	**24**	$400
	30	$406
	36	$411

Step 5. Leg Finish

613	silver (CP)	+$0
91	white (CP)	+$0
98	studio white (CP)	+$0
BK	black	+$0
DB3	glacier	+$60
DN2	nightfall	+$60
DR1	canyon	+$60
G1	graphite (CP)	+$0
OLF	olive	+$60
UBK	ultra black (CP)	+$0

Engage Leg, Desk End, Double GNLFEN

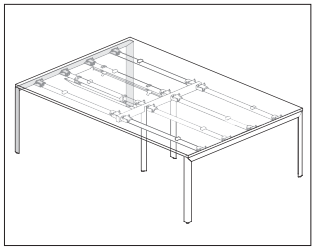

Product Information

Description

The double desk end leg provides support at either end of a back-to-back bench application, or a project table. This fixed height leg provides 1¾″ of leveling adjustment.

Notes

Size of the leg must match the combined depth of the 2 primary surfaces or 1 project table surface being supported.

Dimensions

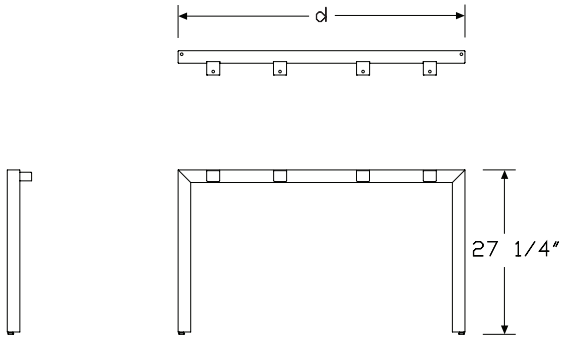

Specification Information

Step 1.

GN

Step 2. Leg Type

LF	fixed height

Step 3. Application

EN.	desk end double

Step 4. Depth

48	48″ deep
60	60″ deep
72	72″ deep

Prices for Steps 1-4.

GNLFEN.	**48**	$528
	60	$560
	72	$592

Step 5. Leg Finish

Metallic Paint

613	silver (CP)	+$0

Sand Texture Paint

91	white (CP)	+$0
98	studio white (CP)	+$0
BK	black	+$0
DB3	glacier	+$60
DN2	nightfall	+$60
DR1	canyon	+$60
G1	graphite (CP)	+$0
OLF	olive	+$60
UBK	ultra black (CP)	+$0

Engage Leg, Intermediate Desk GNLFSN

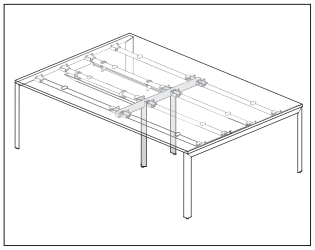

Product Information

Description

The intermediate desk leg provides support within single-sided, back-to-back bench or project table applications. This fixed height leg provides 1¾″ of leveling adjustment.

Notes

Size of the leg must match the depth of the surfaces being supported.

Dimensions

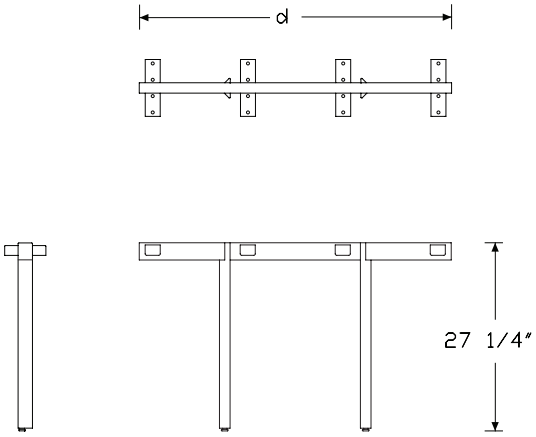

Specification Information

Step 1.

GN

Step 2. Leg Type

LF	fixed height

Step 3. Application

SN.	intermediate desk

Step 4. Depth

24	24″ deep
30	30″ deep
36	36″ deep
48	48″ deep
60	60″ deep
72	72″ deep

Prices for Steps 1-4.

GNLFSN.	**24**	$434
	30	$442
	36	$450
	48	$554
	60	$578
	72	$592

Step 5. Leg Finish

Metallic Paint

613	silver (CP)	+$0

Sand Texture Paint

91	white (CP)	+$0
98	studio white (CP)	+$0
BK	black	+$0
DB3	glacier	+$60
DN2	nightfall	+$60
DR1	canyon	+$60
G1	graphite (CP)	+$0
OLF	olive	+$60
UBK	ultra black (CP)	+$0

Engage Leg, Asymmetrical Desk End, Double

GNLFAL
GNLFAR

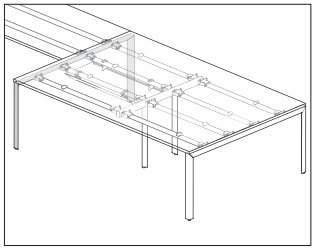

Product Information

Description

This leg supports an asymmetrical application, with a back-to-back application on 1 side of the leg and a single surface on the other side of the leg. It is fixed height, and provides 1¾″ of leveling adjustment.

Notes

Size of the leg must match the depth of the surfaces being supported.

Dimensions

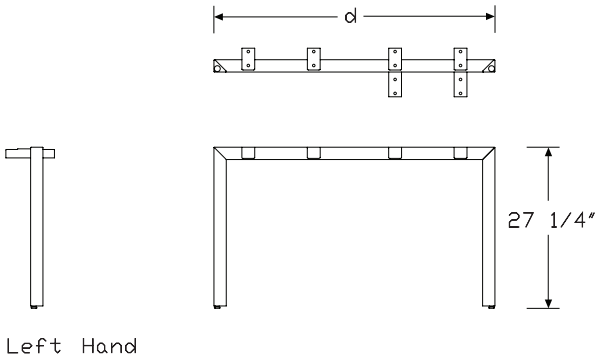

Left Hand

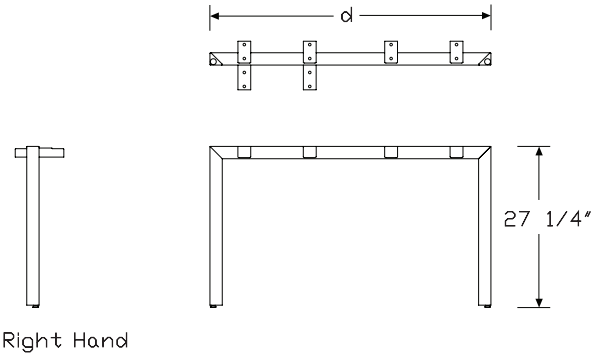

Right Hand

Specification Information

Step 1.

GN

Step 2. Leg Type

LF	fixed height

Step 3. Application

AL.	left hand
AR.	right hand

Step 4. Depth

48	48″ deep
60	60″ deep

Prices for Steps 1-4.

GNLFAL.	**48**	$564
	60	$598
GNLFAR.	**48**	$564
	60	$598

Step 5. Leg Finish

Metallic Paint

613	silver (CP)	+$0

Sand Texture Paint

91	white (CP)	+$0
98	studio white (CP)	+$0
BK	black	+$0
DB3	glacier	+$60
DN2	nightfall	+$60
DR1	canyon	+$60
G1	graphite (CP)	+$0
OLF	olive	+$60
UBK	ultra black (CP)	+$0

Engage Leg, Desk End, Double, Meeting End

GNLFPN

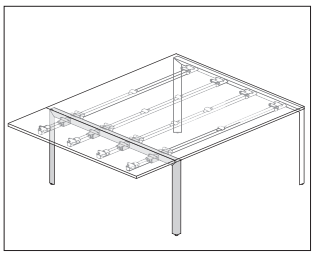

Product Information

Description

This leg supports the use of meeting end beams and surface at the end of a back-to-back bench.

Notes

Size of leg must match the combined depth of the 2 primary surfaces or 1 project table surface being supported.

Order meeting end beams (GNBM.) and surface (GNTDx.) separately.

Dimensions

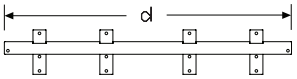

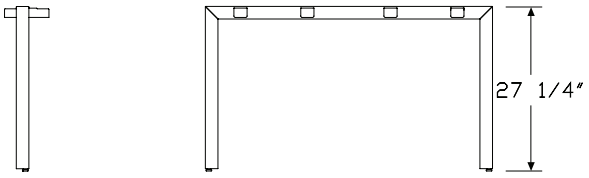

Specification Information

Step 1.

GN

Step 2. Leg Type

LF	fixed height

Step 3. Application

PN.	meeting end

Step 4. Depth

48	48″ deep
60	60″ deep
72	72″ deep

Prices for Steps 1-4.

GNLFPN.	**48**	$552
	60	$614
	72	$661

Step 5. Leg Finish

Metallic Paint

613	silver (CP)	+$0

Sand Texture Paint

91	white (CP)	+$0
98	studio white (CP)	+$0
BK	black	+$0
DB3	glacier	+$60
DN2	nightfall	+$60
DR1	canyon	+$60
G1	graphite (CP)	+$0
OLF	olive	+$60
UBK	ultra black (CP)	+$0

Engage Leg, Corner Leg GNLFCN

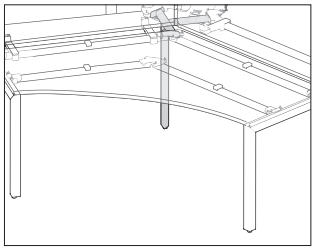

Product Information

Description

This leg provides support at the back corner of a 120° surface. It is fixed height, and provides 1¾″ of leveling adjustment.

Notes

Specify the leg based on the number of surfaces to be supported (GNLFCN.1 supports 1 surface, GNLFCN.2 supports 2 surfaces, and GNLFCN.3 supports 3 surfaces.).

Dimensions

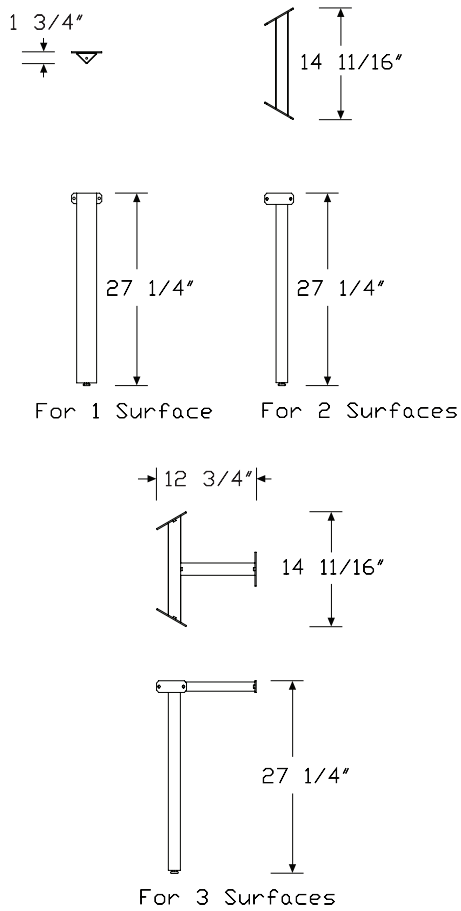

Specification Information

Step 1.

GN

Step 2. Leg Type

LF	fixed height

Step 3. Application

CN.	corner leg

Step 4. Surface Quantity

1	supports one surface
2	supports two surfaces
3	supports three surfaces

Prices for Steps 1-4.

GNLFCN.	**1**	$172
	2	$302
	3	$401

Step 5. Leg Finish

Metallic Paint

613	silver (CP)	+$0

Sand Texture Paint

91	white (CP)	+$0
98	studio white (CP)	+$0
BK	black	+$0
DB3	glacier	+$30
DN2	nightfall	+$30
DR1	canyon	+$30
G1	graphite (CP)	+$0
OLF	olive	+$30
UBK	ultra black (CP)	+$0

Engage Leg, Back-to-Back Bracing Leg GNLFBN

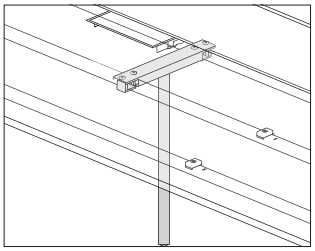

Product Information

Description

This stabilizer leg provides support within a back-to-back bench or project table application, where no intermediate leg is being used. This fixed height leg provides 1¾″ of leveling adjustment.

Notes

This leg is only used with back-to-back or project table applications that have 1 beam width spanning between 2 end legs.

Dimensions

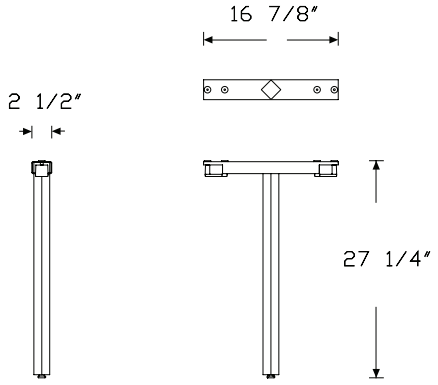

Specification Information

Step 1.

GN A

Step 2. Leg Type

LF	fixed height A	

Step 3. Application

BN.	back-to-back bracing leg A	

Prices for Steps 1-3.

GNLFBN.		$350

Step 4. Leg Finish

Metallic Paint

613	silver (CP)	+$0

Sand Texture Paint

91	white (CP)	+$0
98	studio white (CP)	+$0
BK	black	+$0
DB3	glacier	+$30
DN2	nightfall	+$30
DR1	canyon	+$30
G1	graphite (CP)	+$0
OLF	olive	+$30
UBK	ultra black (CP)	+$0

Engage Leg, Standing End, Double GNLSEN

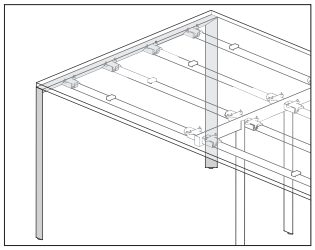

Product Information

Description

This double standing height end leg provides support at either end of a back-to-back bench or project table application. This fixed height leg provides 1¾″ of leveling adjustment.

Notes

Size of leg must match the combined depth of the 2 primary surfaces or 1 project table surface being supported.

Dimensions

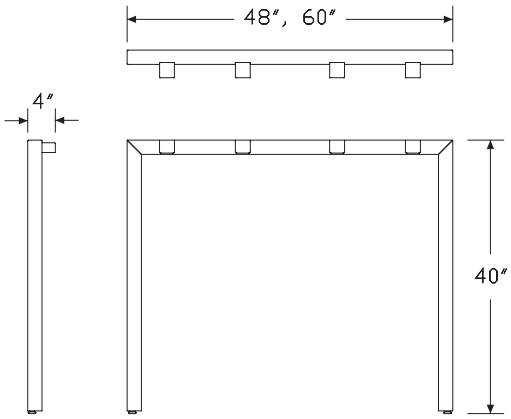

Specification Information

Step 1.

GN A

Step 2. Leg

LS standing height A

Step 3. Application

EN. desk end double A

Step 4. Size

48 48″ deep A
60 60″ deep A

Prices for Steps 1-4.

GNLSEN.	**48**	$766
	60	$814

Step 5. Leg Finish

Metallic Paint

613	silver (CP) A	+$0

Sand Texture Paint

91	white (CP) A	+$0
98	studio white (CP) A	+$0
BK	black A	+$0
DB3	glacier A	+$60
DN2	nightfall A	+$60
DR1	canyon A	+$60
G1	graphite (CP) A	+$0
UBK	ultra black (CP) A	+$0

Engage Leg, Intermediate Standing GNLSSN

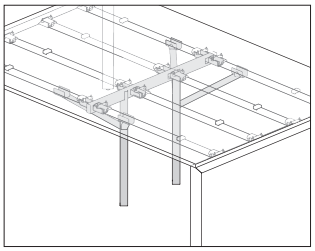

Product Information

Description

This intermediate standing height leg provides support in a back-to-back bench or project table application. This fixed height leg provides 1¾″ of leveling adjustment. Leg includes all bracing, structural supports, and hardware required for a standing height application.

Notes

Size of leg must match the combined depth of the 2 primary surfaces or 1 project table surface being supported.

Dimensions

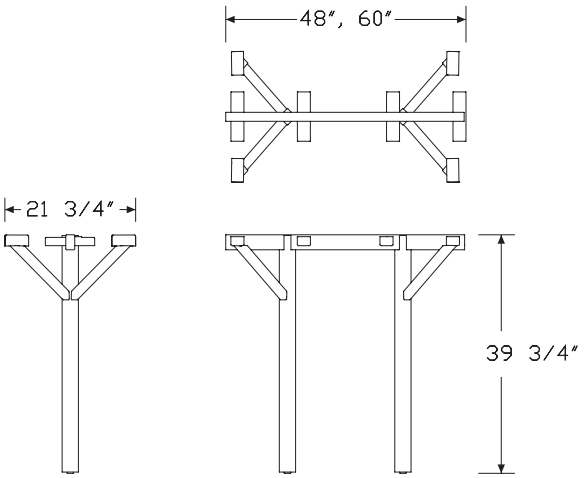

Specification Information

Step 1.

GN A

Step 2. Leg

LS standing height A

Step 3. Application

SN. intermediate A

Step 4. Size

48 48″ deep A
60 60″ deep A

Prices for Steps 1-4.

GNLSSN. 48		$1257
60		$1303

Step 5. Leg Finish

Metallic Paint

613	silver (CP) A	+$0

Sand Texture Paint

91	white (CP) A	+$0
98	studio white (CP) A	+$0
BK	black A	+$0
DB3	glacier A	+$60
DN2	nightfall A	+$60
DR1	canyon A	+$60
G1	graphite (CP) A	+$0
OLF	olive A	+$60
UBK	ultra black (CP) A	+$0

Engage Leg, Standing Back-to-Back Bracing Leg GNLSBN

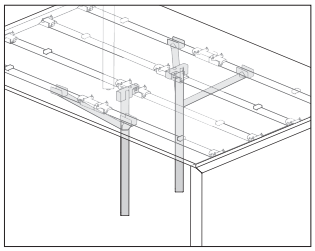

Product Information

Description

This standing height stabilizer leg kit provides support in a back-to-back bench or project table application where no intermediate leg is being used. This fixed height leg provides 1¾″ of leveling adjustment. Leg includes all bracing, structural supports, and hardware required for a standing height application.

Notes

This leg is only used in standing height applications that have 1 beam width spanning between 2 end legs, or between 1 end leg and 1 end-of-run storage unit that supports the surface.

This leg can only be used with 42″-wide or wider beams.

Dimensions

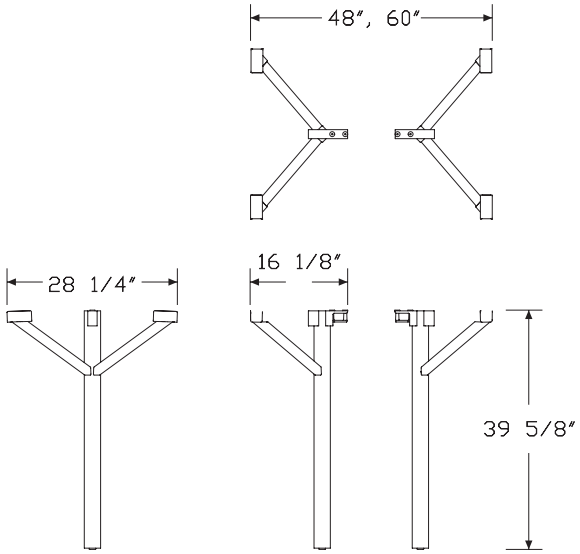

Specification Information

Step 1.

GN A

Step 2. Leg

LS	standing height A	

Step 3. Application

BN.	bracing leg A	

Step 4. Depth

48	48″ deep application A	
60	60″ deep application A	

Prices for Steps 1-4.

GNLSBN.	**48**	$1175
	60	$1196

Step 5. Leg Finish

Metallic Paint

613	silver (CP) A	+$0

Sand Texture Paint

91	white (CP) A	+$0
98	studio white (CP) A	+$0
BK	black A	+$0
DB3	glacier A	+$60
DN2	nightfall A	+$60
DR1	canyon A	+$60
G1	graphite (CP) A	+$0
OLF	olive A	+$60
UBK	ultra black (CP) A	+$0

Closed Leg, Desk End, Single

GNCFEL
GNCFER

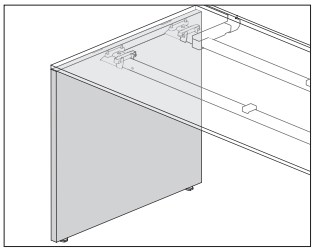

Product Information

Description

This single desk end leg provides support for an individual table or the end of a single-sided bench or return when a performance rail is not being used. It has a laminate top and thermoplastic edge, laminate top with a thermoplastic backed plywood edge, or veneer top and edge. This fixed height leg provides 1¾″ of leveling adjustment.

Notes

Size of leg must match depth of surface being supported.

Top of leg will be under the attached surface.

Grain/pattern direction is vertical on veneer, wood grain laminates, and directional laminates.

Dimensions

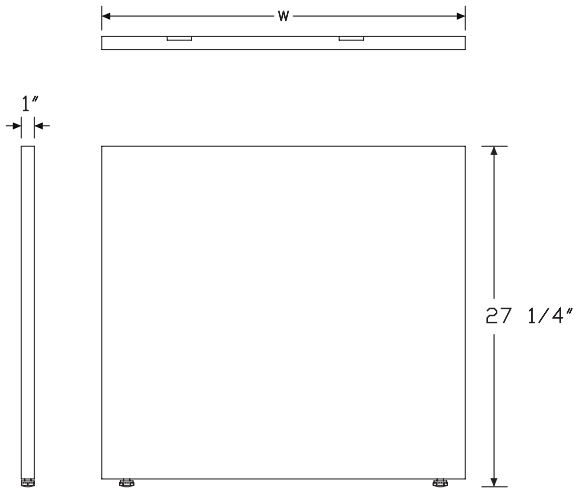

Specification Information

Step 1.

GN A

Step 2. Leg Type

CF fixed height A

Step 3. Application

EL. left hand A

ER. right hand A

Step 4. Size

24 24″ deep A

30 30″ deep A

Step 5. Material

L high-pressure laminate top/thermoplastic edge A

U high-pressure laminate/universal edge A

W veneer A

Prices for Steps 1-5.

		L	U	W
GNCFEL.	**24**	$531	531	1057
	30	$554	554	1105
GNCFER.	**24**	$531	531	1057
	30	$554	554	1105

Step 6. Leg Finish

For high-pressure laminate top/thermoplastic edge (L) or high-pressure laminate/universal edge (U)

125	natural maple (CP) A	+$0
126	natural cherry (CP) A	+$0
127	walnut (CP) A	+$0
139	light ash (CP) A	+$0
140	warm ash (CP) A	+$0
76	light brown walnut A	+$0
8Q	folkstone grey (CP) A	+$0
91	white (CP) A	+$0
98	studio white (CP) A	+$0
CL	cool grey neutral A	+$0
HF	inner tone light A	+$0
HP	light anigre A	+$0
LBA	clear on ash (CP) A	+$0
LBR	phantom ecru A	+$0
LBS	phantom cocoa A	+$0
LBU	medium matte walnut (CP) A	+$0
LBV	warm grey teak A	+$0
LBB	oak on ash (CP) A	+$0
LBC	walnut on ash (CP) A	+$0
LBF	neutral twill A	+$0
LBJ	graphite twill A	+$0
LBQ	white twill A	+$0
LT	light tone A	+$0
LU	soft white A	+$0
WL	warm stone (CP) A	+$0
WN	warm grey neutral A	+$0

Wood Veneer

For veneer (W)

2U	light brown walnut A	+$55
40	dark brown walnut A	+$55
ET	clear on ash A	+$55
EU	oak on ash A	+$55
EV	walnut on ash A	+$55

Step 7. Edge Finish

For high-pressure laminate top/thermoplastic edge (L)

125	natural maple (CP) A	+$0
126	natural cherry (CP) A	+$0
127	walnut (CP) A	+$0
139	light ash (CP) A	+$0
140	warm ash (CP) A	+$0
G1	graphite (CP) A	+$0
76	light brown walnut A	+$0
8Q	folkstone grey (CP) A	+$0
91	white (CP) A	+$0
98	studio white (CP) A	+$0
CL	cool grey neutral A	+$0
HF	inner tone light A	+$0
HP	light anigre A	+$0
LBA	clear on ash (CP) A	+$0
LBR	phantom ecru A	+$0
LBS	phantom cocoa A	+$0
LBU	medium matte walnut (CP) A	+$0
LBV	warm grey teak A	+$0
LBB	oak on ash (CP) A	+$0
LBC	walnut on ash (CP) A	+$0
LBF	neutral twill A	+$0
LBJ	graphite twill A	+$0
LBQ	white twill A	+$0
LU	soft white A	+$0
WL	warm stone (CP) A	+$0
WN	warm grey neutral A	+$0

For high-pressure laminate/universal edge (U)

PLY	plywood edge A	+$50

Step 8. Bracket Finish

Finish

613	silver (CP) A	+$0
91	white (CP) A	+$0
98	studio white (CP) A	+$0
BK	black A	+$0
G1	graphite (CP) A	+$0

Closed Leg, Desk End, Double GNCFEN

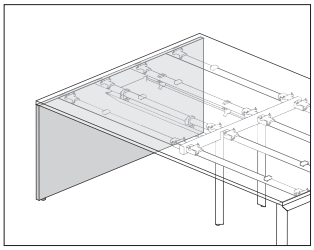

Product Information

Description

This double desk end leg provides support at either end of a back-to-back bench application or project table. It has a laminate top and thermoplastic edge, laminate top with a thermoplastic backed plywood edge, or veneer top and edge. This fixed height leg provides 1¾″ of leveling adjustment.

Notes

Size of leg must match the combined depth of the 2 primary surfaces or 1 project table surface being supported.

Top of leg will be under the attached surface.

Grain/pattern direction is vertical on veneer, wood grain laminates, and directional laminates.

Dimensions

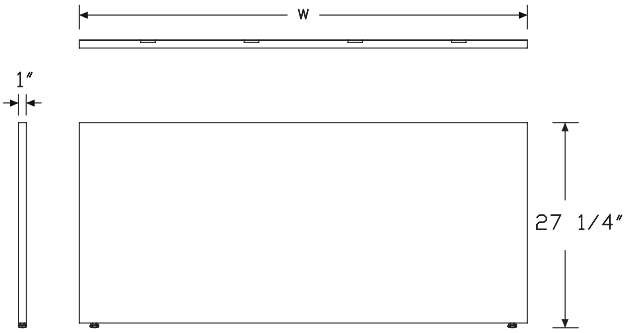

Specification Information

Step 1.

GN A

Step 2. Leg Type

CF fixed height A

Step 3. Application

EN. desk end double A

Step 4. Size

48 48″ deep A

60 60″ deep A

Step 5. Material

L high-pressure laminate top/thermoplastic edge A

U high-pressure laminate/universal edge A

W veneer A

Prices for Steps 1-5.

	L	U	W
GNCFEN. 48	$812	812	1617
60	$933	933	1862

Step 6. Leg Finish

For high-pressure laminate top/thermoplastic edge (L) or high-pressure laminate/universal edge (U)

125	natural maple (CP) A	+$0
126	natural cherry (CP) A	+$0
139	light ash (CP) A	+$0
140	warm ash (CP) A	+$0
76	light brown walnut A	+$0
8Q	folkstone grey (CP) A	+$0
91	white (CP) A	+$0
98	studio white (CP) A	+$0
CL	cool grey neutral A	+$0
HF	inner tone light A	+$0
HP	light anigre A	+$0
LBA	clear on ash (CP) A	+$0
LBR	phantom ecru A	+$0
LBS	phantom cocoa A	+$0
LBU	medium matte walnut (CP) A	+$0
LBV	warm grey teak A	+$0
LBB	oak on ash (CP) A	+$0
LBC	walnut on ash (CP) A	+$0
LBF	neutral twill A	+$0
LBJ	graphite twill A	+$0
LBQ	white twill A	+$0
LT	light tone A	+$0
LU	soft white A	+$0
WL	warm stone (CP) A	+$0
WN	warm grey neutral A	+$0

Wood Veneer

For veneer (W)

2U	light brown walnut A	+$55
40	dark brown walnut A	+$55
ET	clear on ash A	+$55
EU	oak on ash A	+$55
EV	walnut on ash A	+$55

Step 7. Edge Finish

For high-pressure laminate top/thermoplastic edge (L)

125	natural maple (CP) A	+$0
126	natural cherry (CP) A	+$0
127	walnut (CP) A	+$0
139	light ash (CP) A	+$0
140	warm ash (CP) A	+$0
G1	graphite (CP) A	+$0
76	light brown walnut A	+$0
8Q	folkstone grey (CP) A	+$0
91	white (CP) A	+$0
98	studio white (CP) A	+$0
CL	cool grey neutral A	+$0
HF	inner tone light A	+$0
HP	light anigre A	+$0
LBA	clear on ash (CP) A	+$0
LBR	phantom ecru A	+$0
LBS	phantom cocoa A	+$0
LBU	medium matte walnut (CP) A	+$0
LBV	warm grey teak A	+$0
LBB	oak on ash (CP) A	+$0
LBC	walnut on ash (CP) A	+$0
LBF	neutral twill A	+$0
LBJ	graphite twill A	+$0
LBQ	white twill A	+$0
LU	soft white A	+$0
WL	warm stone (CP) A	+$0
WN	warm grey neutral A	+$0

For high-pressure laminate/universal edge (U)

PLY	plywood edge A	+$50

Step 8. Bracket Finish

Finish

613	silver (CP) A	+$0
91	white (CP) A	+$0
98	studio white (CP) A	+$0
BK	black A	+$0
G1	graphite (CP) A	+$0

Closed Leg, Standing End, Double GNCSEN

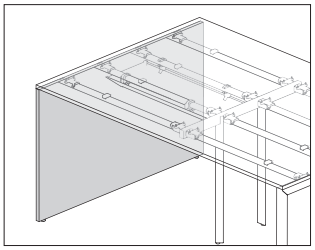

Product Information

Description

This double standing height end leg provides support at either end of a back-to-back bench application or project table. It has a laminate top and thermoplastic edge, laminate top with a thermoplastic backed plywood edge, or veneer top and edge. This fixed height leg provides 1¾″ of leveling adjustment.

Notes

Size of leg must match the combined depth of the 2 primary surfaces or 1 project table surface being supported.

Top of leg will be under the attached surface.

Grain/pattern direction is vertical on veneer, wood grain laminates, and directional laminates.

Dimensions

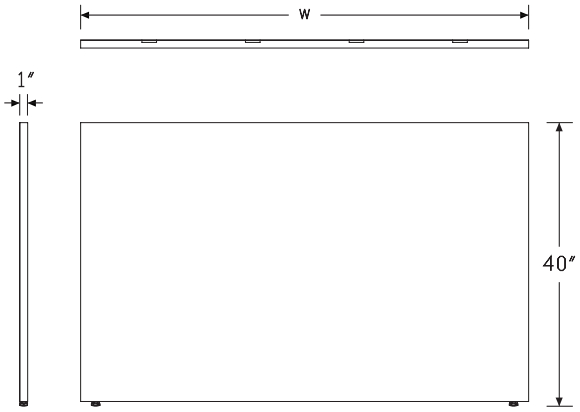

Specification Information

Step 1.

GN A

Step 2. Leg Type

CS standing height A

Step 3. Application

EN. desk end double A

Step 4. Size

48 48″ deep A

60 60″ deep A

Step 5. Material

L high-pressure laminate top/thermoplastic edge A

U high-pressure laminate/universal edge A

W veneer A

Prices for Steps 1-5.

		L	U	W
GNCSEN.	**48**	$1046	1046	2090
	60	$1209	1209	2414

Step 6. Leg Finish

For high-pressure laminate top/thermoplastic edge (L) or high-pressure laminate/universal edge (U)

125	natural maple (CP) A	+$0
126	natural cherry (CP) A	+$0
127	walnut (CP) A	+$0
139	light ash (CP) A	+$0
140	warm ash (CP) A	+$0
76	light brown walnut A	+$0
8Q	folkstone grey (CP) A	+$0
91	white (CP) A	+$0
98	studio white (CP) A	+$0
CL	cool grey neutral A	+$0
HF	inner tone light A	+$0
HP	light anigre A	+$0
LBA	clear on ash (CP) A	+$0
LBR	phantom ecru A	+$0
LBS	phantom cocoa A	+$0
LBU	medium matte walnut (CP) A	+$0
LBV	warm grey teak A	+$0
LBB	oak on ash (CP) A	+$0
LBC	walnut on ash (CP) A	+$0
LBF	neutral twill A	+$0
LBJ	graphite twill A	+$0
LBQ	white twill A	+$0
LT	light tone A	+$0
LU	soft white A	+$0
WL	warm stone (CP) A	+$0
WN	warm grey neutral A	+$0

Wood Veneer

For veneer (W)

2U	light brown walnut A	+$55
40	dark brown walnut A	+$55
ET	clear on ash A	+$55
EU	oak on ash A	+$55
EV	walnut on ash A	+$55

Step 7. Edge Finish

For high-pressure laminate top/thermoplastic edge (L)

125	natural maple (CP) A	+$0
126	natural cherry (CP) A	+$0
127	walnut (CP) A	+$0
139	light ash (CP) A	+$0
140	warm ash (CP) A	+$0
G1	graphite (CP) A	+$0
76	light brown walnut A	+$0
8Q	folkstone grey (CP) A	+$0
91	white (CP) A	+$0
98	studio white (CP) A	+$0
CL	cool grey neutral A	+$0
HF	inner tone light A	+$0
HP	light anigre A	+$0
LBA	clear on ash (CP) A	+$0
LBR	phantom ecru A	+$0
LBS	phantom cocoa A	+$0
LBU	medium matte walnut (CP) A	+$0
LBV	warm grey teak A	+$0
LBB	oak on ash (CP) A	+$0
LBC	walnut on ash (CP) A	+$0
LBF	neutral twill A	+$0
LBJ	graphite twill A	+$0
LBQ	white twill A	+$0
LU	soft white A	+$0
WL	warm stone (CP) A	+$0
WN	warm grey neutral A	+$0

For high-pressure laminate/universal edge (U)

613	silver (CP) A	+$0
PLY	plywood edge A	+$50

Step 8. Bracket Finish

Sand Texture Paint

91	white (CP) A	+$0
98	studio white (CP) A	+$0
BK	black A	+$0
G1	graphite (CP) A	+$0
UBK	ultra black (CP) A	+$0

Beams, Rectangular Primary GNBR.

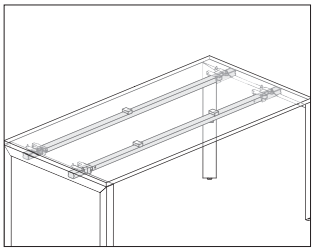

Product Information

Description

This pair of beams connects to end, asymmetrical, and intermediate Engage legs, and is required for the support of rectangular primary surfaces. Beams also provide attachment and support for cable management, screens, and other elements. Attachment hardware packs ordered separately.

Notes

To connect beams to fixed surfaces and legs up to 78″ wide, order hardware pack (GNHPF.) separately; for 84″-wide and 96″-wide beams, order hardware pack (**GNHOF.**) separately. To connect beams to sliding surfaces and legs, use generic hardware pack (GNHRS.) when using primary sliding surfaces (GNTRD., GNTRF., GNTRG., GNTRN.) with generic (G) attachment option or primary performance rail surfaces (GNTRR.) only.

Dimensions

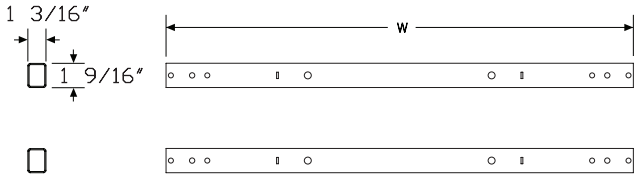

Specification Information

Step 1.

GNBR.

Step 2. Width

36	36″ wide
42	42″ wide
48	48″ wide
54	54″ wide
60	60″ wide
66	66″ wide
72	72″ wide
78	78″ wide A
84	84″ wide A
96	96″ wide A

Prices for Steps 1-2.

GNBR.	**36**	$127
	42	$136
	48	$143
	54	$206
	60	$186
	66	$256
	72	$226
	78	$314
	84	$328
	96	$351

Step 3. Finish

Sand Texture Paint

91	white (CP)	+$13
98	studio white (CP)	+$0
BK	black	+$0
CL	cool grey neutral	+$0
G1	graphite (CP)	+$13
UBK	ultra black (CP)	+$0

Beams, Rectangular Return

GNBA.
GNBB.

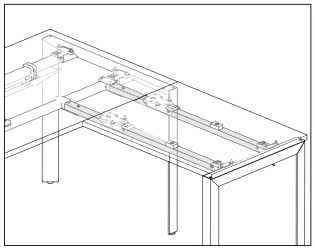

Product Information

Description

This pair of beams supports a return surface. It connects to a rectangular primary beam and a single desk end Engage leg. Beams also provide attachment and support for cable management, screens, and other elements. Attachment hardware packs ordered separately.

Notes

Specify beam type to match depth of primary surface to which it will be attached.

To connect beams to fixed surfaces and legs, order hardware pack (GNHSF.).

Dimensions

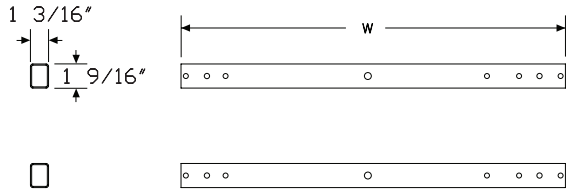

Specification Information

Step 1.

GNB

Step 2. Attachment Depth

A.	24″ deep primary
B.	30″ deep primary

Step 3. Width

36	36″ wide
42	42″ wide
48	48″ wide
60	60″ wide
72	72″ wide

Prices for Steps 1-3.

GNBA.	**36**	$185
	42	$232
	48	$245
	60	$272
	72	$307
GNBB.	**36**	$196
	42	$234
	48	$265
	60	$310
	72	$342

Return Leg Beam Replacement Kit GNBD.

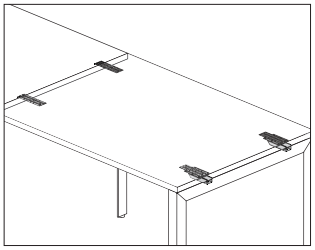

Product Information

Description

This kit supports the attachment of a Layout Studio Engage leg directly to the underside of a return surface without the need for beams. The kit includes 2 beam replacement brackets and ganging hardware to attach the return surface to a primary surface.

Notes

Kit should only be used to support 1 end of a return work surface.

2 kits are required to support a shared return using a double end leg.

Return surfaces 48″ wide and wider require the use of stiffeners. Standard stiffener rules for Formcoat® surfaces apply.

Specify leg bracket finish to match finish of leg to which it will be attached.

Dimensions

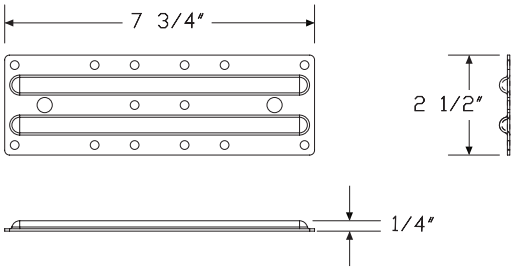

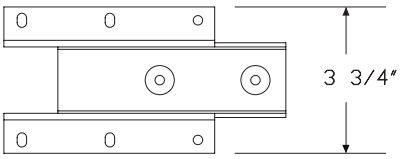

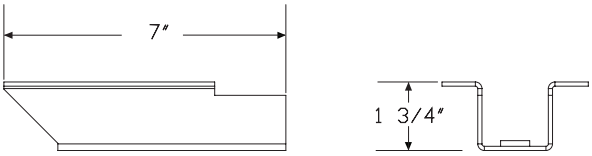

Specification Information

Step 1.

GNBD.	$80

Step 2. Leg Bracket Finish

Metallic Paint

613	silver (CP)	+$0

Sand Texture Paint

91	white (CP)	+$0
98	studio white (CP)	+$0
BK	black	+$0
G1	graphite (CP)	+$0
UBK	ultra black (CP)	+$0

Beams, Meeting End GNBM.

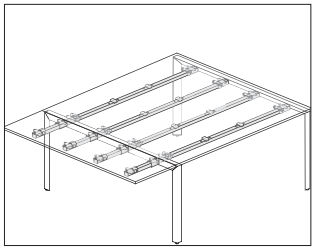

Product Information

Description

This pair of beams connects to a meeting end and intermediate Engage legs, and is required when specifying a meeting end surface across the end of a back-to-back configuration. Beams also provide attachment and support for cable management, screens, and other elements. Attachment hardware packs ordered separately.

Notes

Specify beam size to match the width of the adjacent rectangular primary surface.

To connect beams to fixed surfaces and legs up to 78″ wide, order hardware pack (GNHPF.) separately; for 84″-wide and 96″-wide beams, order hardware pack (**GNHOF.**) separately. To connect beams to sliding surfaces and legs, use generic hardware pack (GNHRS.) when using primary sliding surfaces (GNTRD., GNTRF., GNTRG., GNTRN.) with generic (G) attachment option or primary performance rail surfaces (GNTRR.) only.

To attach meeting end surface to the meeting end beams, specify 2 hardware packs (GNHPF.).

Meeting end beams are not usable in standing height applications.

Dimensions

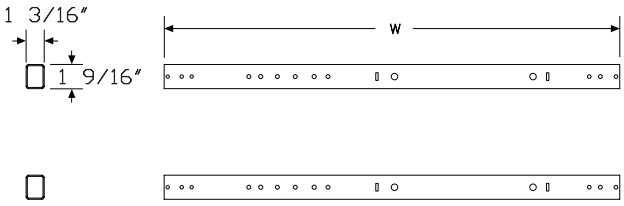

Specification Information

Step 1.

GNBM.

Step 2. Width

48	48″ wide
60	60″ wide
66	66″ wide
72	72″ wide
84	84″ wide

Prices for Steps 1-2.

GNBM.	**48**	$262
	60	$316
	66	$324
	72	$326
	84	$392

Beams, 120°

GNBF.
GNBG.

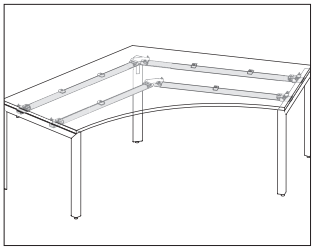

Product Information

Description

This set of beams connects to end or intermediate Engage legs, and a corner Engage leg, and is required for the support of a single 120° primary surface. Beams also provide attachment and support for cable management, screens, and other elements. Set includes 4 beams. Attachment hardware packs ordered separately.

Notes

Order corner leg (GNLFCN.) separately.

To connect beams to fixed surfaces and legs, order hardware pack (GNHDF.).

Dimensions

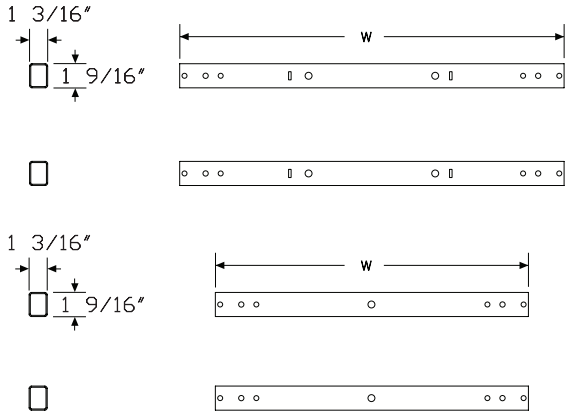

Specification Information

Step 1.

GNB

Step 2. Depth

F.	24″ deep
G.	30″ deep

Step 3. Width

48	48″ wide
54	54″ wide A
60	60″ wide

Prices for Steps 1-3.

GNBF.	**48**	$393
	54	$434
	60	$472
GNBG.	**48**	$393
	54	$434
	60	$472

Access Door GNPD.

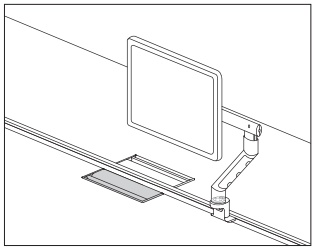

Product Information

Description

This metal door assembly fits inside an access cutout in the back edge of a Layout Studio® primary work surface and provides access to the power and data channel. It has a 3-sided frame and pivoting door.

Notes

Work surface must be specified with access door cutout. Order surface separately.

Dimensions

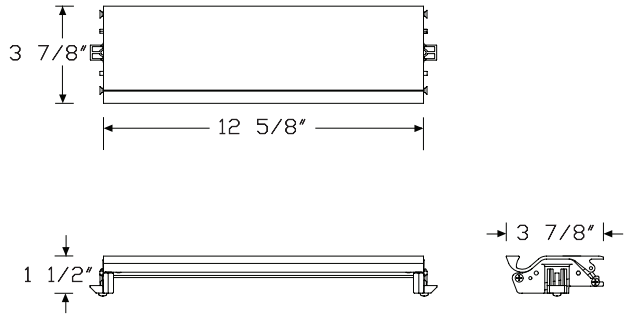

Specification Information

Step 1.

GNPD. A

Step 2. Application

A	edge mounted A	

Prices for Steps 1-2.

GNPD. A		$206

Step 3. Finish

Metallic Paint

613	silver (CP) A	+$0

Sand Texture Paint

BK	black A	+$0
UBK	ultra black (CP) A	+$0

Smooth Paint

91	white (CP) A	+$0
98	studio white (CP) A	+$0
G1	graphite (CP) A	+$0

Junction Block Attachment Bracket GNPA.

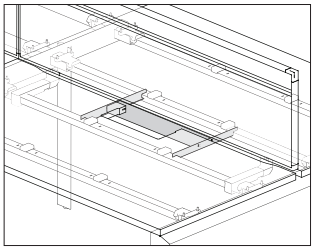

Product Information

Description

This painted steel bracket provides an attachment location for 1 junction block, centered on the rear beams of a table or bench application. Finish is cool grey neutral.

Notes

For double/back-to-back applications, order a 4-circuit junction block (GN1358.) separately.

For single-sided applications, order a 2-duplex block (GN1358.2S) or a 1-duplex block (GN1358.1S) separately.

Dimensions

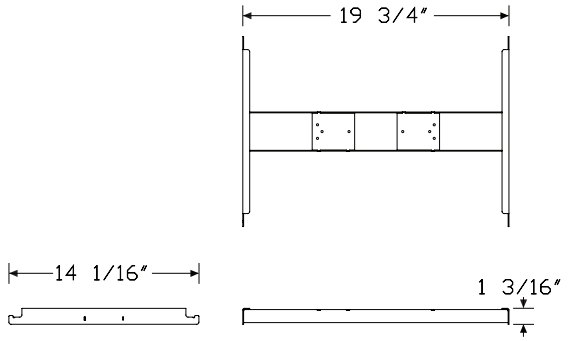

For Double/Back-to-Back Applications (D)

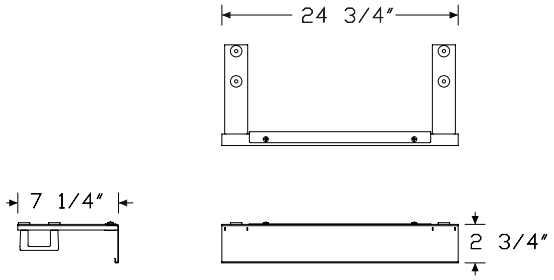

For Single-Sided Applications (S)

Specification Information

Step 1.

GNPA.

Step 2. Application

D	double/back-to-back applications
S	single-sided applications

Prices for Steps 1-2.

GNPA.	**D**	$108
	S	$219

Junction Block, 4-Circuit GN1358

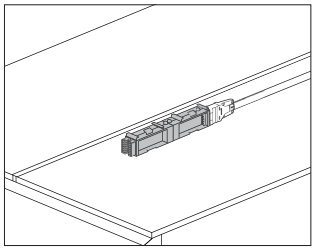

Product Information

Description

This block attaches to a junction block attachment bracket and accepts 4-circuit receptacles for access and distribution of up to 4 20-amp circuits. It has connection points at both ends for attaching a power entry, a 4-circuit power jumper, or block-to-block connector. Finish is black. It is UL Listed for use with Layout Studio® in the US and Canada.

Notes

Layout Studio modular power products are only compatible with other Layout Studio modular products, or with Connect™ 4-circuit modular components. Note that the UL listing for Layout Studio is no longer applicable when connecting Layout Studio power to Connect power.

For single-sided applications, specify the 2-duplex block (GN1358.2S) or the 1-duplex block (GN1358.1S).

For back-to-back applications, specify the 2-duplex block (GN1358.2B) or the 1-duplex block (GN1358.1B).

Order the following products separately:

- Duplex receptacle, 4-circuit (GN1355.)
- Junction block attachment bracket (GNPA.)

To route power from building to junction block, order 4-circuit power entry (GN1351. or GN1352.) separately.

To route power between junction blocks, order junction block to junction block jumper (GN1353.) separately.

To connect 2 junction blocks together, order a short block to block connector (GN1354.S) separately.

Dimensions

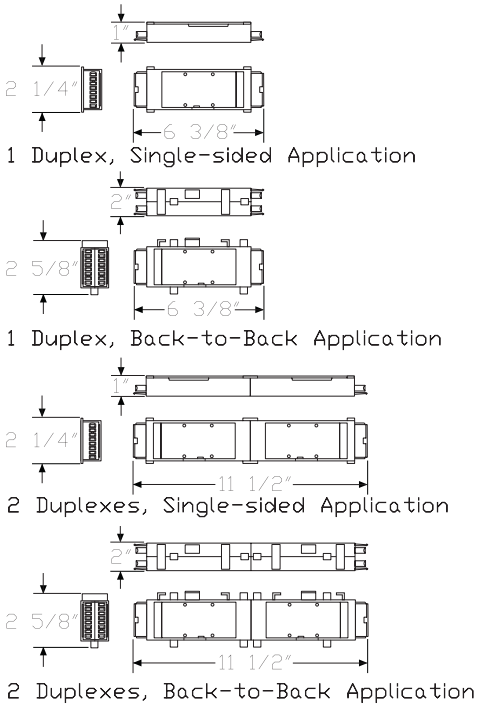

Specification Information

Step 1.

GN1358.

Step 2. Type

1S	1 duplex, single-sided application
1B	1 duplex, back-to-back application
2S	2 duplexes, single-sided application
2B	2 duplexes, back-to-back application

Step 3. Attachment Hardware

B	beam attached
R	performance rail attached

Prices for Steps 1-3.

		B	R
GN1358.	**1S**	$119	134
	1B	$126	140
	2S	$96	112
	2B	$106	121

Block Connector, 4-Circuit GN1354

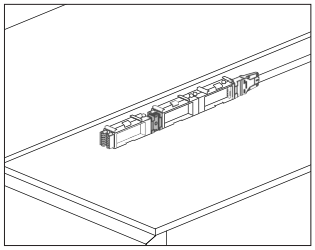

Product Information

Description

This connector connects 2 junction blocks together. Finish is black. Attachment hardware included. It is UL Listed for use with Layout Studio® in the US and Canada.

Notes

Layout Studio modular power products are only compatible with other Layout Studio modular products, or with Connect™ 4-circuit modular components. Note that the UL listing for Layout Studio is no longer applicable when connecting Layout Studio power to Connect power.

When 3 duplex receptacles are required per access point, use this connector to connect a GN1358.1S to a GN1358.2S for single-sided applications, or a GN1358.1B to a GN1358.2B for back-to-back applications.

Dimensions

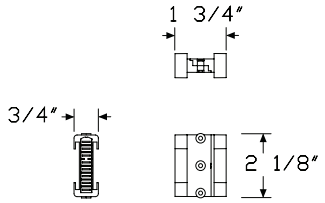

Short Receptacle-to-Receptacle Block Connector

Specification Information

Step 1.

GN1354.S	$64

Junction Block-to-Junction Block Jumper GN1353

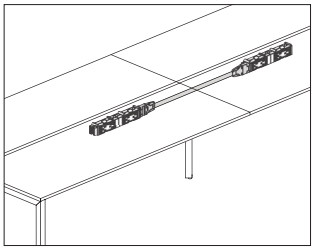

Product Information

Description

This adjustable power jumper distributes up to 4 20-amp circuits between 2 junction blocks. One end of the jumper extends an additional 3″ when connecting to an adjacent junction block. It is UL Listed for use with Layout Studio® in the US and Canada.

Notes

Layout Studio modular power products are only compatible with other Layout Studio modular products, or with Connect™ 4-circuit modular components. Note that the UL listing for Layout Studio is no longer applicable when connecting Layout Studio power to Connect power.

Finish on 5/8″ oval metallic conduit is silver.

For New York City, a harness cover (GNPH.) to span between wire management trays must be ordered separately.

Dimensions

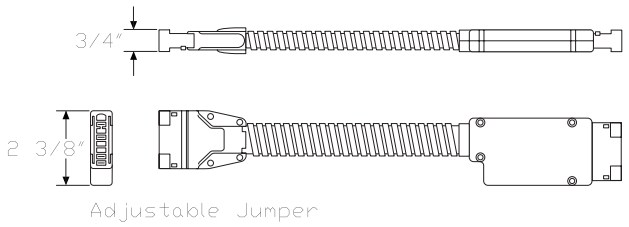

Specification Information

Step 1.

GN1353.

Step 2. Width

12	12″ wide
18	18″ wide
24	24″ wide
30	30″ wide
36	36″ wide
42	42″ wide
48	48″ wide
54	54″ wide
60	60″ wide
66	66″ wide
72	72″ wide
78	78″ wide
84	84″ wide
90	90″ wide
108	108″ wide
120	120″ wide
132	132″ wide
144	144″ wide

Step 3. Type

A	adjustable jumper

Prices for Steps 1-3.

		A
GN1353.	**12**	$102
	18	$111
	24	$118
	30	$125
	36	$133
	42	$138
	48	$147
	54	$153
	60	$162
	66	$166
	72	$174
	78	$185
	84	$189
	90	$196
	108	$217
	120	$229
	132	$246
	144	$260

Harness Cover GNPH.

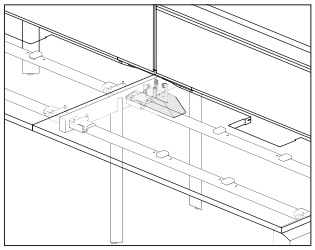

Product Information

Description

This cover provides a secure chase for the routing of a power harness between Layout Studio® wire management trays when UL1286 Listing is required.

Notes

Specify power harness separately.

Dimensions

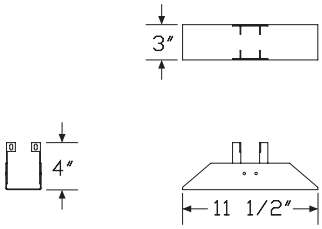

Specification Information

Step 1.

GNPH.	$38

Step 2. Finish

Metallic Paint

613	silver (CP)	+$0

Sand Texture Paint

91	white (CP)	+$0
98	studio white (CP)	+$0
BK	black	+$0
G1	graphite (CP)	+$0
UBK	ultra black (CP)	+$0

Duplex Receptacle, 4-Circuit GN1355

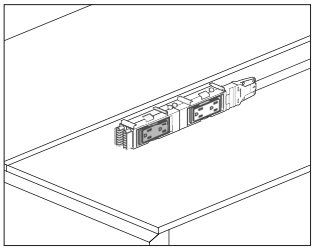

Product Information

Description

This 15- or 20-amp duplex receptacle attaches to a junction block to provide electrical access. Finish is black. Package of 1. It is UL Listed for use with Layout Studio® in the US and Canada.

Notes

Layout Studio modular power products are only compatible with other Layout Studio modular products, or with Connect™ 4-circuit modular components. Note that the UL listing for Layout Studio is no longer applicable when connecting Layout Studio power to Connect power.

Receptacle is labeled as I, II, III, or IV for circuit identification.

Order junction block (GN1358.) separately.

Dimensions

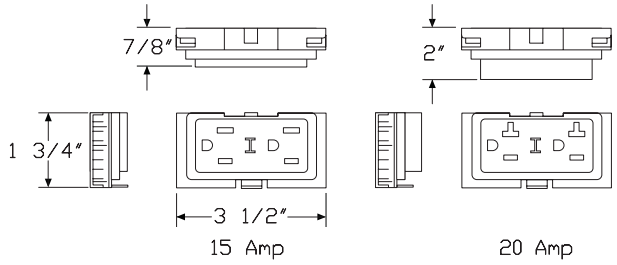

Specification Information

Step 1.

GN1355.

Step 2. Amps

15	15 amp
20	20 amp

Step 3. Circuit

1	circuit I
2	circuit II
3	circuit III
4	circuit IV

Prices for Steps 1-3.

		1	2	3	4
GN1355.	**15**	$32	32	32	32
	20	$40	40	40	40

Power Entry, 4-Circuit GN1351

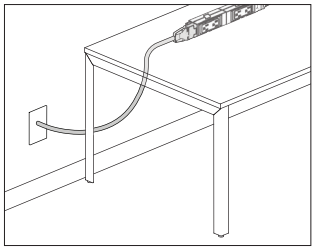

Product Information

Description

This power entry connects a building's electrical from a wall, floor, or column to the end of a 4-circuit junction block and distributes up to 4 20-amp circuits. UL Listed for use with Layout Studio® in the US and Canada.

Notes

Layout Studio modular power products are only compatible with other Layout Studio modular products, or with Connect™ 4-circuit modular components. Note that the UL listing for Layout Studio is no longer applicable when connecting Layout Studio power to Connect power.

Power entry can be field cut to the appropriate length.

For San Francisco, specify ⅜″ flex metallic conduit option (C).

Finish color on liquid tight conduit is black. Finish color on metallic conduit is silver.

To manage and/or cover power entry, order umbilical riser (GNWF. or GNWG.) or floor power entry cover (GNPC.) separately.

A licensed electrician must wire the power entry to the building's electrical system.

Dimensions

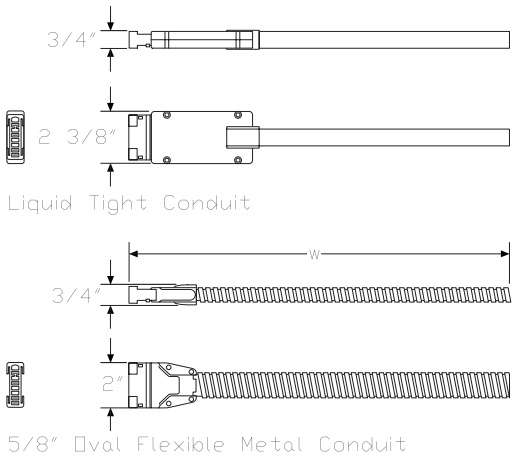

Specification Information

Step 1.

GN1351.

Step 2. Length

06	6′ long
12	12′ long
18	18′ long
24	24′ long

Step 3. Conduit Type

L	liquid tight conduit
C	⅜″ flex metallic conduit

Prices for Steps 1-3.

		L	C
GN1351.	**06**	$195	195
	12	$275	275
	18	$357	357
	24	$458	458

Power Entry, 4-Circuit, New York City GN1352

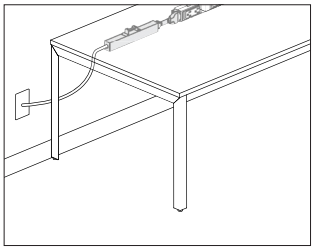

Product Information

Description

This power entry connects a building's electrical from a wall, floor, or column to the end of a 4-circuit junction block and distributes up to 4 20-amp circuits. It includes a junction box and harness. It is UL Listed for use with Layout Studio® in the US and Canada.

Notes

Layout Studio modular power products are only compatible with other Layout Studio modular products, or with Connect™ 4-circuit modular components. Note that the UL listing for Layout Studio is no longer applicable when connecting Layout Studio power to Connect power.

Power entry comes with a 38″ festoon.

A licensed electrician must wire the power entry to the building's electrical system.

Dimensions

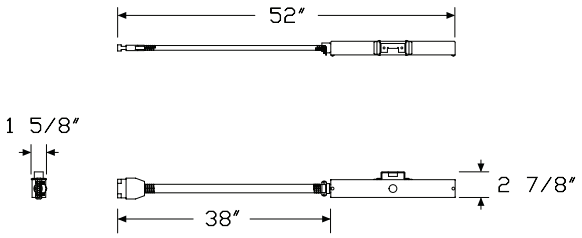

Specification Information

Step 1.

GN1352.38	$307

Wire Management Tray

GNWD.
GNWS.

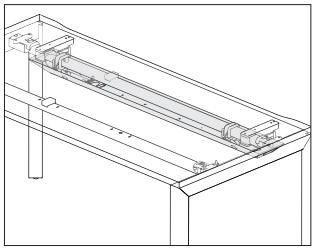

Product Information

Description

This painted steel tray provides a location to hold and manage power and voice/data cables within a Layout Studio® environment. Trays are available for both back-to-back and single-sided applications.

Notes

Single-sided wire management tray is for use with a non-rail surface. For performance rail, order wire management tray, single, performance rail (GNWS.R) separately.

The double unit attaches directly to beams with included hardware.

The single unit attaches to beams, but also requires an additional bracket. For each single tray, order 2 generic beam clamps (GNSG.) separately. If a desk up or modesty screen is being used, the generic beam clamps are not required.

Specify tray width to match beam width.

For use with double tray, order optional cable management clips (GNWC.) separately.

To route power and/or data from the floor to a cable tray, order the umbilical riser (GNWF.T or GNWG.T) separately.

Tray includes a knock-out on each end to allow a power jumper to pass from 1 tray to the next when UL1286 Listing is required (primarily New York City). Order harness cover (GNPH.) separately.

Dimensions

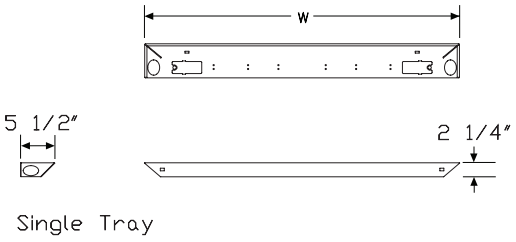

Single Tray

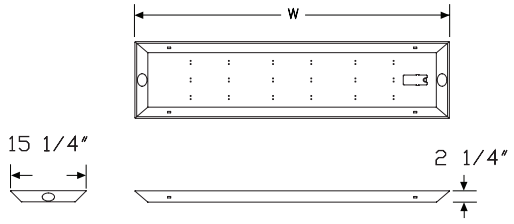

Double Tray

Specification Information

Step 1.

GN

Step 2. Type

WS.	single
WD.	double

Step 3. Width

36	36″ wide
42	42″ wide
48	48″ wide
54	54″ wide
60	60″ wide
66	66″ wide
72	72″ wide
78	78″ wide
84	84″ wide
96	96″ wide

Prices for Steps 1-3.

GNWS.	**36**	$198
	42	$201
	48	$203
	54	$237
	60	$271
	66	$275
	72	$277
	78	$285
	84	$311
	96	$333
GNWD.	**36**	$189
	42	$195
	48	$201
	54	$227
	60	$247
	66	$250
	72	$254
	78	$262
	84	$285
	96	$307

Step 4. Finish

Metallic Paint

613	silver (CP)	+$0

Sand Texture Paint		
91	white (CP)	+$0
98	studio white (CP)	+$0
BK	black	+$0
G1	graphite (CP)	+$0
UBK	ultra black (CP)	+$0

Data Module GNWM.

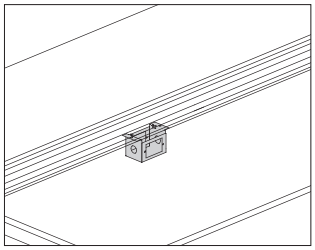

Product Information

Description

This housing mounts to the underside of a Layout Studio® performance rail or to the bottom of a wire management tray and supports face plates with voice/data ports. Finish is cool grey neutral. Attachment hardware included.

Notes

Housing accepts a standard NEMA data faceplate.

Dimensions

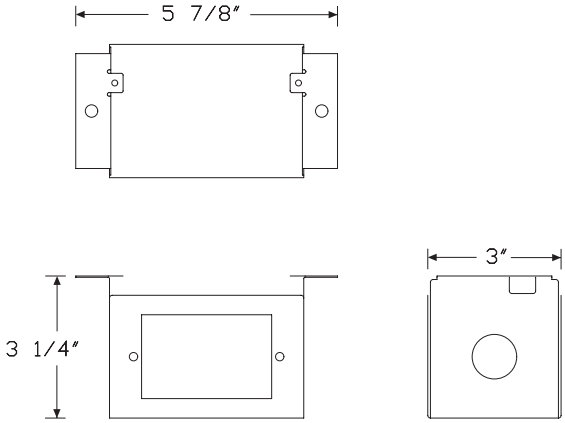

Specification Information

Step 1.

GN A

Step 2. Application

WM. data box A

Prices for Steps 1-2.

GNWM. $43

Cable Management Clips, Double Tray GNWC.

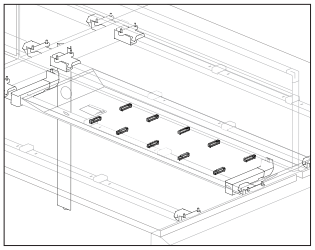

Product Information

Description

These clips attach into holes in the bottom of a double cable management tray to manage voice/data cables. Package includes 10 clips.

Dimensions

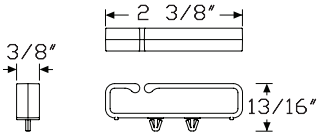

Specification Information

Step 1.

GNWC.

Step 2. Quantity

10 10 per pack

Prices for Steps 1-2.

GNWC. 10	$23

Floor Power Entry Cover GNPC.

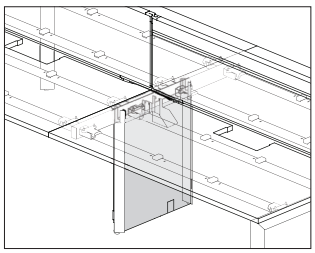

Product Information

Description

This 2-piece painted metal cover encloses the open space located between the 2 legs of a Layout Studio® 48″-, 60″-, or 72″-deep intermediate desk leg. It is used to conceal a floor power entry and/or cables from the floor to a wire management tray. Attachment hardware included.

Dimensions

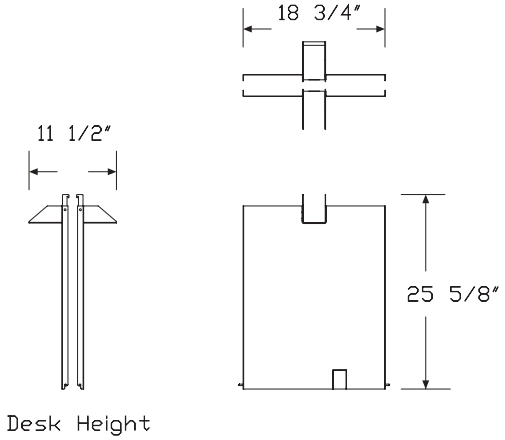

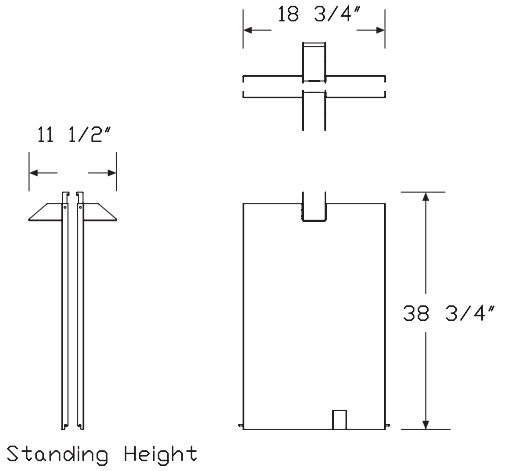

Specification Information

Step 1.

GNPC.

Step 2. Height

F	desk height
S	standing height

Prices for Steps 1-2.

GNPC.	**F**	$301
	S	$355

Step 3. Finish

Metallic Paint

613	silver (CP)	+$0

Sand Texture Paint

91	white (CP)	+$0
98	studio white (CP)	+$0
BK	black	+$0
DB3	glacier	+$30
DN2	nightfall	+$30
DR1	canyon	+$30
G1	graphite (CP)	+$0
OLF	olive	+$30
UBK	ultra black (CP)	+$0

Umbilical Riser, Fixed Height

GNWF.
GNWG.

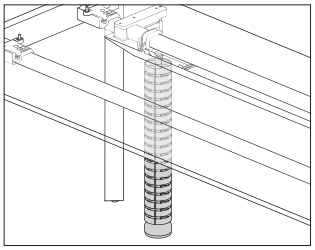

Product Information

Description

This umbilical riser routes power and/or data cables from the floor to the underside of a surface or wire management tray.

Notes

For data capacity, see Cable Capacity Chart in Omni.

Dimensions

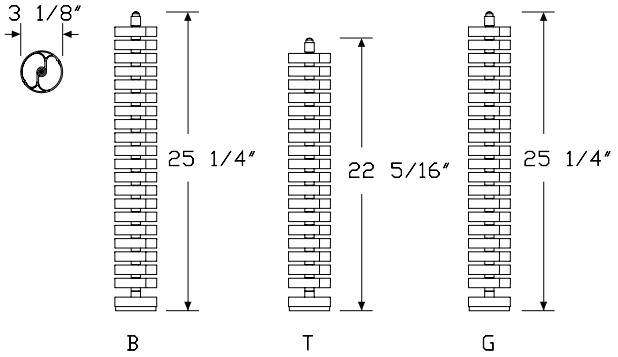

Fixed, seated height

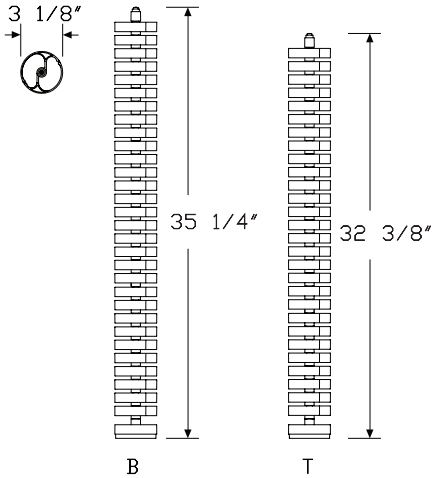

Fixed, standing height

Specification Information

Step 1.

GN

Step 2. Type

WG.	fixed, standing height [A]
WF.	fixed, seated height

Step 3. Attachment

For fixed, seated height (WF.)

B	beam attachment
T	tray attachment
G	generic attachment

For fixed, standing height (WG.)

B	beam attachment
T	tray attachment

Prices for Steps 1-3.

GNWG.	**B**	$228
	T	$220
GNWF.	**B**	$113
	T	$104
	G	$124

Step 4. Finish

Metallic Paint

613	silver (CP)	+$0

Sand Texture Paint

91	white (CP)	+$0
98	studio white (CP)	+$0
BK	black	+$0
G1	graphite (CP)	+$0
UBK	ultra black (CP)	+$0

Primary Work Surface, Rectangular

GNTRD.
GNTRF.
GNTRG.
GNTRN.

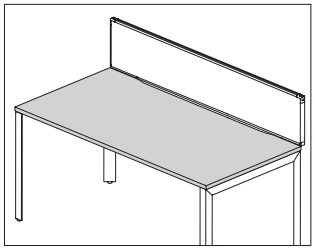

Product Information

Description

This squared-edge surface attaches to one set of primary beams and Engage legs in either a table, single-sided bench, or back-to-back bench application. It has a laminate top with thermoplastic edge, laminate top with a thermoplastic backed plywood edge, or veneer top and edge. Surface is 1⅛″ thick, and has several back edge options depending on application and access required.

Notes

When attaching a monitor arm or other item that clamps to the back edge of a surface, specify the flash gap (F) or flash gap and access door cutout (G).

The flash gap is 0.6″ deep and starts 7⅝″ from each end.

For surfaces with access door cutout, an access door (GNPD.) must be ordered separately. For surfaces 84″ and 96″ wide, 2 access doors must be ordered.

Surfaces with a flash gap and access door cutout (GNTRG.) are only available 48″ wide and wider.

For fixed attachment of beams up to 78″ wide, order hardware pack (GNHPF.) separately; for 84″-wide and 96″-wide beams, order hardware pack (**GNHOF.**) separately.

Sliding surface attachment is available for 24″- or 30″-deep rectangular primary surface when using a performance rail or when using a non-rail surface with the generic attachment option. Order rectangular primary surface sliding hardware pack (GNHRS.) separately.

For quick release attachment, order quick release attachment hardware pack (GNHPA.) separately, in addition to the fixed attachment hardware pack (GNHPF.).

Attaching clamp-mounted components to the back edge of a sliding surface may result in reduced surface extension.

Dimensions

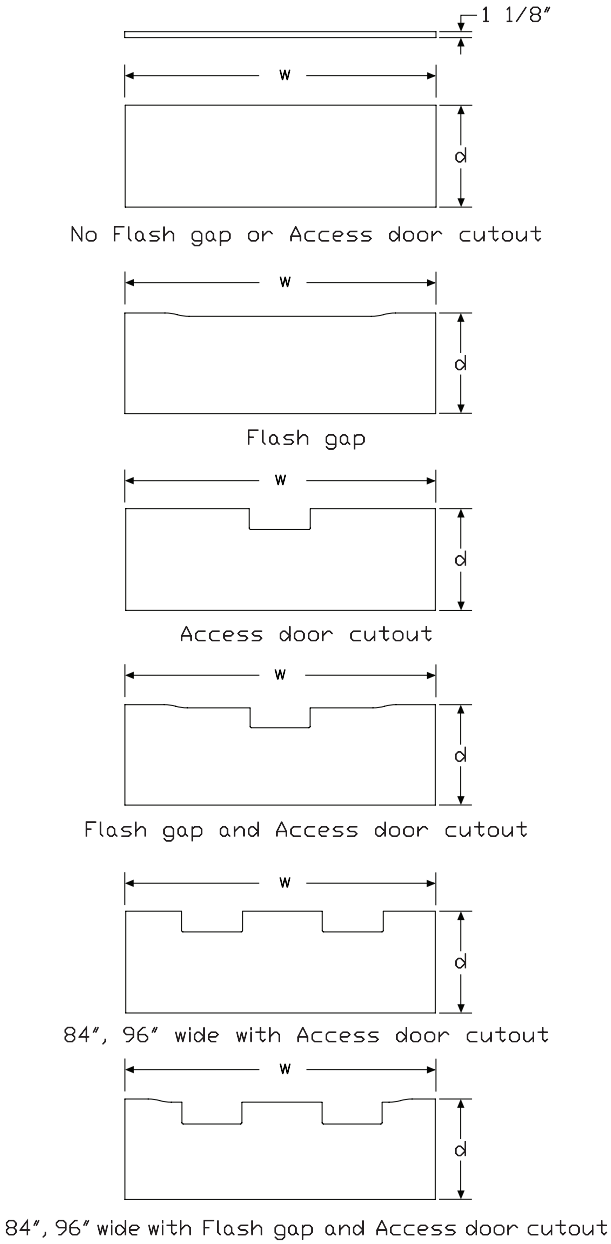

Specification Information

Step 1.

GN

Step 2. Type

TR rectangular primary worksurface

Step 3. Access Detail

N. no flash gap or access cut-out
F. flash gap
D. access door cut-out A
G. flash gap and access door cut-out A

Step 4. Depth

24 24″ deep
30 30″ deep
36 36″ deep

Step 5. Width

For no flash gap or access cut-out (N.), flash gap (F.), or access door cut-out (D.)

36 36″ wide
42 42″ wide
48 48″ wide
54 54″ wide A
60 60″ wide
66 66″ wide A
72 72″ wide
78 78″ wide
84 84″ wide
96 96″ wide

For flash gap and access door cut-out (G.)

48 48″ wide
54 54″ wide
60 60″ wide
66 66″ wide
72 72″ wide
78 78″ wide
84 84″ wide
96 96″ wide

Step 6. Attachment

For 36″ deep (36)

F non-sliding

For access door cut-out (D.) or flash gap and access door cut-out (G.) with 24″ deep (24) or 30″ deep (30) with 48″ wide (48), 42″ wide (42), 54″ wide (54), 60″ wide (60), 66″ wide (66), 72″ wide (72), or 78″ wide (78)

G generic

For no flash gap or access cut-out (N.) or flash gap (F.) with 30″ deep (30) with 48″ wide (48), 42″ wide (42), 54″ wide (54), 60″ wide (60), 66″ wide (66), 72″ wide (72), or 78″ wide (78)

F non-sliding
G generic

For no flash gap or access cut-out (N.) or flash gap (F.) with 24″ deep (24) with 48″ wide (48), 42″ wide (42), 54″ wide (54), 60″ wide (60), 66″ wide (66), 72″ wide (72), or 78″ wide (78)

F non-sliding
G generic

For no flash gap or access cut-out (N.), flash gap (F.), access door cut-out (D.), or flash gap and access door cut-out (G.) with 24″ deep (24) or 30″ deep (30) with 84″ wide (84) or 96″ wide (96)

F non-sliding

For access door cut-out (D.) with 24″ deep (24) or 30″ deep (30) with 36″ wide (36)

F non-sliding

For no flash gap or access cut-out (N.) or flash gap (F.) with 24″ deep (24) with 36″ wide (36)

F non-sliding
G generic

For no flash gap or access cut-out (N.) or flash gap (F.) with 30″ deep (30) with 36″ wide (36)

F non-sliding
G generic

Step 7. Surface Material

L high-pressure laminate top/thermoplastic edge
W veneer
U high-pressure laminate/universal edge
A high-pressure laminate top/thermoplastic edge with MicrobeCare™ A
B veneer with MicrobeCare™ A
C high-pressure laminate top/universal edge with MicrobeCare™ A

Prices for Steps 1-7.

		FL	FW	FU	FA	FB	FC
GNTRN.24	**36**	$184	327	184	238	382	238
	42	$205	366	205	260	421	260
	48	$223	404	223	307	486	307
	54	$249	444	249	333	526	333
	60	$276	488	276	359	571	359
	66	$309	542	309	390	626	390
	72	$334	597	334	415	679	415
	78	$390	689	390	492	793	492
	84	$444	779	444	549	882	549
	96	$488	853	488	592	957	592
30	**36**	$217	376	217	272	431	272
	42	$240	423	240	296	478	296
	48	$267	475	267	349	556	349
	54	$298	525	298	380	609	380
	60	$327	579	327	410	662	410
	66	$366	641	366	449	724	449
	72	$404	705	404	486	788	486
	78	$464	812	464	567	916	567
	84	$525	920	525	630	1024	630
	96	$576	1006	576	679	1110	679
36	**36**	$256	454	256	311	510	311
	42	$283	506	283	340	561	340
	48	$314	552	314	397	635	397
	54	$348	614	348	431	696	431
	60	$382	670	382	466	754	466
	66	$422	744	422	505	828	505
	72	$467	817	467	550	901	550
	78	$540	944	540	643	1046	643
	84	$614	1069	614	716	1173	716
	96	$669	1169	669	772	1271	772

		GL	GW	GU	GA	GB	GC
GNTRN.24	**36**	$187	337	187	242	390	242
	42	$211	375	211	265	428	265
	48	$229	412	229	312	493	312
	54	$258	458	258	341	541	341
	60	$283	504	283	367	586	367
	66	$315	557	315	399	641	399
	72	$346	613	346	427	695	427
	78	$404	707	404	507	810	507
30	**36**	$222	385	222	277	440	277
	42	$247	434	247	302	487	302
	48	$274	486	274	355	568	355
	54	$307	540	307	388	622	388
	60	$337	593	337	419	676	419
	66	$375	657	375	456	740	456
	72	$412	719	412	493	803	493
	78	$477	834	477	580	935	580

		FL	FW	FU	FA	FB	FC
GNTRF.24	**36**	$245	392	245	300	449	300
	42	$267	426	267	322	482	322
	48	$285	464	285	371	548	371
	54	$314	509	314	397	590	397
	60	$338	551	338	421	633	421
	66	$372	606	372	453	690	453
	72	$400	659	400	482	742	482
	78	$453	753	453	556	854	556
	84	$509	844	509	613	948	613
	96	$551	920	551	654	1024	654
30	**36**	$278	439	278	334	492	334
	42	$305	487	305	360	542	360
	48	$327	538	327	410	619	410
	54	$360	590	360	442	674	442
	60	$392	642	392	476	725	476
	66	$435	706	435	516	789	516
	72	$464	766	464	548	848	548
	78	$526	876	526	631	980	631
	84	$590	984	590	695	1090	695
	96	$641	1072	641	743	1175	743
36	**36**	$317	518	317	374	575	374
	42	$348	567	348	404	622	404
	48	$376	616	376	458	699	458
	54	$411	676	411	492	760	492
	60	$447	738	447	530	819	530
	66	$489	810	489	574	893	574
	72	$531	881	531	614	965	614
	78	$604	1009	604	708	1112	708
	84	$676	1136	676	779	1238	779
	96	$737	1235	737	840	1338	840

		GL	GW	GU	GA	GB	GC
GNTRF.	**24 36**	$249	403	249	305	456	305
	42	$274	439	274	328	492	328
	48	$296	478	296	378	561	378
	54	$321	523	321	404	605	404
	60	$349	566	349	434	649	434
	66	$378	622	378	460	706	460
	72	$410	678	410	491	762	491
	78	$466	772	466	568	876	568
	30 36	$285	451	285	342	506	342
	42	$312	500	312	368	554	368
	48	$337	550	337	419	632	419
	54	$372	605	372	453	689	453
	60	$402	658	402	484	741	484
	66	$447	722	447	530	805	530
	72	$478	789	478	561	871	561
	78	$541	899	541	645	1003	645

		FL	FW	FU	FA	FB	FC
GNTRD.	**24 36**	$206	347	206	262	403	262
	84	$460	788	460	565	891	565
	96	$504	855	504	605	960	605
	30 36	$239	393	239	295	450	295
	84	$540	921	540	643	1027	643
	96	$590	1006	590	695	1110	695
	36 36	$276	472	276	330	525	330
	42	$305	518	305	360	575	360
	48	$333	564	333	414	646	414
	54	$368	624	368	451	707	451
	60	$402	681	402	484	764	484
	66	$442	754	442	525	838	525
	72	$484	821	484	566	905	566
	78	$552	946	552	655	1048	655
	84	$624	1066	624	728	1170	728
	96	$679	1166	679	782	1268	782

		GL	GW	GU	GA	GB	GC
GNTRD.	**24 42**	$227	383	227	282	439	282
	48	$246	419	246	328	503	328
	54	$272	460	272	354	543	354
	60	$298	504	298	380	586	380
	66	$327	554	327	410	637	410
	72	$353	609	353	437	691	437
	78	$408	698	408	511	801	511
	30 42	$263	440	263	317	493	317
	48	$285	488	285	371	571	371
	54	$319	540	319	403	622	403
	60	$347	592	347	428	675	428
	66	$383	652	383	467	734	467
	72	$419	711	419	503	794	503
	78	$481	817	481	585	920	585

		FL	FW	FU	FA	FB	FC
GNTRG.	**24 84**	$531	863	531	633	965	556
	96	$571	935	571	675	1040	675
	30 84	$613	1002	613	714	1104	714
	96	$659	1084	659	764	1188	764
	36 48	$402	636	402	484	718	484
	54	$435	698	435	516	779	516
	60	$468	756	468	551	839	551
	66	$511	829	511	593	912	593
	72	$552	901	552	635	982	635
	78	$624	1024	624	728	1128	728
	84	$698	1148	698	801	1253	801
	96	$754	1246	754	855	1348	855

		GL	GW	GU	GA	GB	GC
GNTRG.	**24 48**	$314	488	314	397	571	398
	54	$338	531	338	421	614	421
	60	$361	571	361	444	654	444
	66	$396	627	396	478	709	478
	72	$422	681	422	505	764	505
	78	$477	770	477	580	873	580
	30 48	$351	557	351	436	641	436
	54	$385	613	385	468	695	468
	60	$413	662	413	498	743	498
	66	$456	724	456	540	806	540
	72	$488	788	488	571	870	571
	78	$550	896	550	653	998	653

Step 8. Surface Finish

For high-pressure laminate top/thermoplastic edge (L), high-pressure laminate/universal edge (U), high-pressure laminate top/thermoplastic edge with MicrobeCare™ (A), or high-pressure laminate top/universal edge with MicrobeCare™ (C)

125	natural maple (CP)	+$0
126	natural cherry (CP)	+$0
127	walnut (CP)	+$0
139	light ash (CP)	+$0
140	warm ash (CP)	+$0
76	light brown walnut	+$0
91	white (CP)	+$0
98	studio white (CP)	+$0
8Q	folkstone grey (CP)	+$0
CL	cool grey neutral	+$0
HF	inner tone light	+$0
HP	light anigre	+$0
LBA	clear on ash (CP)	+$0
LBR	phantom ecru	+$0
LBS	phantom cocoa	+$0
LBU	medium matte walnut (CP)	+$0
LBV	warm grey teak	+$0
LBB	oak on ash (CP)	+$0
LBC	walnut on ash (CP)	+$0
LBF	neutral twill	+$0
LBJ	graphite twill	+$0
LBQ	white twill	+$0
LU	soft white	+$0
WL	warm stone (CP)	+$0
WN	warm grey neutral	+$0

Wood Veneer

For veneer (W) or veneer with MicrobeCare™ (B)

2U	light brown walnut	+$55
40	dark brown walnut	+$55
ET	clear on ash	+$55
EU	oak on ash	+$55
EV	walnut on ash	+$55

Step 9. Edge Finish

For high-pressure laminate top/thermoplastic edge (L) or high-pressure laminate top/thermoplastic edge with MicrobeCare™ (A)

125	natural maple (CP)	+$0
126	natural cherry (CP)	+$0
127	walnut (CP)	+$0
139	light ash (CP)	+$0
140	warm ash (CP)	+$0
G1	graphite (CP)	+$0
76	light brown walnut	+$0
8Q	folkstone grey (CP)	+$0
91	white (CP)	+$0
98	studio white (CP)	+$0
CL	cool grey neutral	+$0
LBA	clear on ash (CP)	+$0
LBR	phantom ecru	+$0
LBS	phantom cocoa	+$0
LBU	medium matte walnut (CP)	+$0
LBV	warm grey teak	+$0
LBB	oak on ash (CP)	+$0
LBC	walnut on ash (CP)	+$0
LBF	neutral twill	+$0
LBJ	graphite twill	+$0
LBQ	white twill	+$0
WL	warm stone (CP)	+$0
WN	warm grey neutral	+$0
HF	inner tone light	+$0
HP	light anigre	+$0
LU	soft white	+$0

For high-pressure laminate/universal edge (U) or high-pressure laminate top/universal edge with MicrobeCare™ (C)

PLY	plywood edge A	+$50

Step 10. Flash Gap Edge Finish *For flash gap (F.) or flash gap and access door cut-out (G.) with high-pressure laminate/universal edge (U) or high-pressure laminate top/universal edge with MicrobeCare™ (C)*		
125	natural maple (CP)	+$0
126	natural cherry (CP)	+$0
127	walnut (CP)	+$0
139	light ash (CP)	+$0
140	warm ash (CP)	+$0
76	light brown walnut	+$0
8Q	folkstone grey (CP)	+$0
91	white (CP)	+$0
98	studio white (CP)	+$0
CL	cool grey neutral	+$0
HF	inner tone light	+$0
HP	light anigre	+$0
LBA	clear on ash (CP)	+$0
LBB	oak on ash (CP)	+$0
LBC	walnut on ash (CP)	+$0
LBF	neutral twill	+$0
LBJ	graphite twill	+$0
LBQ	white twill	+$0
LBR	phantom ecru	+$0
LBS	phantom cocoa	+$0
LBU	medium matte walnut (CP)	+$0
LBV	warm grey teak	+$0
LU	soft white	+$0
UBK	ultra black (CP)	+$0
WL	warm stone (CP)	+$0
WN	warm grey neutral	+$0

Return Work Surface, Rectangular GNTSN.

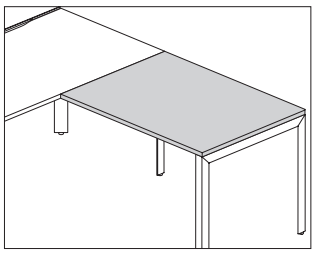

Product Information

Description

This squared-edge surface attaches to one set of return beams and an Engage leg to create a return. It has a laminate top with thermoplastic edge, laminate top with a thermoplastic backed plywood edge, or veneer top and edge. Surface is 1⅛″ thick.

Notes

When using a screen along the back edge of the surface, items that clamp to the back edge of the surface cannot be used.

Order fixed attachment hardware pack (GNHSF.) separately.

For quick release attachment, order quick release attachment hardware pack (GNHPA.) separately, in addition to the fixed attachment hardware pack (GNHSF.).

Dimensions

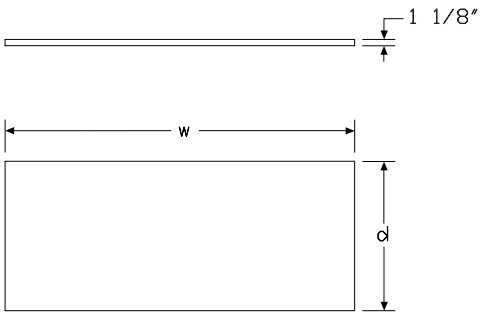

Specification Information

Step 1.

GN

Step 2. Type

TS rectangular return worksurface

Step 3. Access Detail

N. no flash gap or access cut-out

Step 4. Depth

24 24″ deep

Step 5. Width

36 36″ wide
42 42″ wide
48 48″ wide
60 60″ wide
72 72″ wide

Step 6. Attachment

F non-sliding

Step 7. Surface Material

L high-pressure laminate top/thermoplastic edge
W veneer
U high-pressure laminate/universal edge

Prices for Steps 1-7.

		FL	FW	FU
GNTSN.24	**36**	$210	357	210
	42	$234	393	234
	48	$254	428	254
	60	$278	511	278
	72	$359	617	359

Return Work Surface, Rectangular

continued

Step 8. Surface Finish

For high-pressure laminate top/thermoplastic edge (L) or high-pressure laminate/universal edge (U)

125	natural maple (CP)	+$0
126	natural cherry (CP)	+$0
127	walnut (CP)	+$0
139	light ash (CP)	+$0
140	warm ash (CP)	+$0
76	light brown walnut	+$0
91	white (CP)	+$0
98	studio white (CP)	+$0
8Q	folkstone grey (CP)	+$0
CL	cool grey neutral	+$0
HF	inner tone light	+$0
HP	light anigre	+$0
LBA	clear on ash (CP)	+$0
LBR	phantom ecru	+$0
LBS	phantom cocoa	+$0
LBU	medium matte walnut (CP)	+$0
LBV	warm grey teak	+$0
LBB	oak on ash (CP)	+$0
LBC	walnut on ash (CP)	+$0
LBF	neutral twill	+$0
LBJ	graphite twill	+$0
LBQ	white twill	+$0
LU	soft white	+$0
WL	warm stone (CP)	+$0
WN	warm grey neutral	+$0

Wood Veneer

For veneer (W)

2U	light brown walnut	+$55
40	dark brown walnut	+$55
ET	clear on ash	+$55
EU	oak on ash	+$55
EV	walnut on ash	+$55

Step 9. Edge Finish

For high-pressure laminate top/thermoplastic edge (L)

125	natural maple (CP)	+$0
126	natural cherry (CP)	+$0
127	walnut (CP)	+$0
139	light ash (CP)	+$0
140	warm ash (CP)	+$0
G1	graphite (CP)	+$0
76	light brown walnut	+$0
8Q	folkstone grey (CP)	+$0
91	white (CP)	+$0
98	studio white (CP)	+$0
CL	cool grey neutral	+$0
LBA	clear on ash (CP)	+$0
LBR	phantom ecru	+$0
LBS	phantom cocoa	+$0
LBU	medium matte walnut (CP)	+$0
LBV	warm grey teak	+$0
LBB	oak on ash (CP)	+$0
LBC	walnut on ash (CP)	+$0
LBF	neutral twill	+$0
LBJ	graphite twill	+$0
LBQ	white twill	+$0
WL	warm stone (CP)	+$0
WN	warm grey neutral	+$0
HF	inner tone light	+$0
HP	light anigre	+$0
LU	soft white	+$0

For high-pressure laminate/universal edge (U)

PLY	plywood edge	+$50

Project Table, Rectangular

GNTPA.
GNTPN.

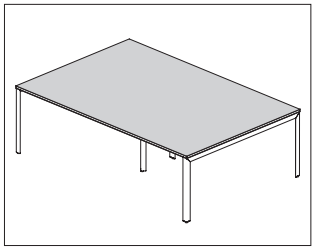

Product Information

Description

This squared-edge surface attaches to primary beams and Engage legs to create a freestanding table. It has a laminate top with thermoplastic edge, laminate top with a thermoplastic backed plywood edge, or veneer top and edge. Surface is 1⅛″ thick.

Notes

2 or more sets of beams (GNBR.) are required per surface. Order separately.

Tables must include at least 1 intermediate leg (GNLFSN.) or 1 bracing leg (GNLFBN.).

For surfaces with access cut-out, a 5-outlet Logic grommet mounted electrical distributor (Y1425.C or Y1425.F) or Logic grommet pass thru (Y1420.V) must be ordered separately.

For surfaces with access cutout and widths of 72″, 84″ or 96″, 2 access cut-outs are included.

For fixed attachment of beams up to 78″ wide, order hardware pack (GNHPF.) separately; for 84″-wide and 96″-wide beams, order hardware pack (**GNHOF.**) separately.

Dimensions

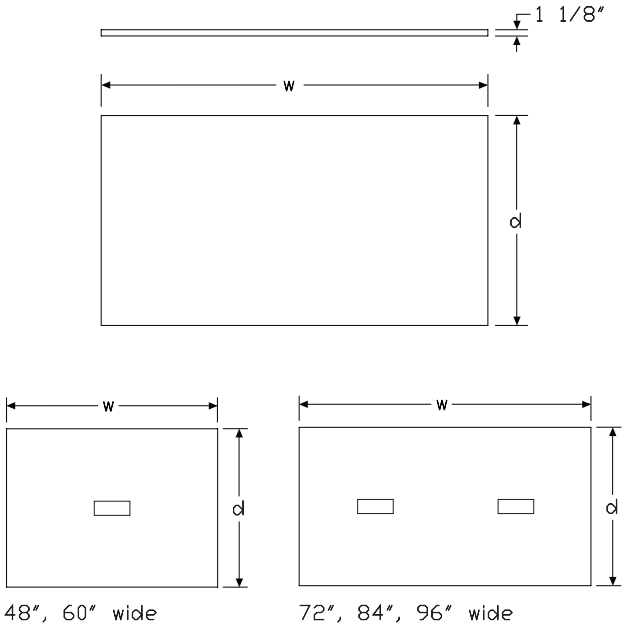

Specification Information

Step 1.

GN

Step 2. Type

TP rectangular project table

Step 3. Access Detail

N. no access cut-out
A. access cut-out

Step 4. Depth

48 48″ deep
60 60″ deep

Step 5. Width

For 48″ deep (48)

48 48″ wide
60 60″ wide
72 72″ wide
84 84″ wide
96 96″ wide

For 60″ deep (60)

60 60″ wide
72 72″ wide
84 84″ wide
96 96″ wide

Step 6. Attachment

F non-sliding

Step 7. Surface Material

L high-pressure laminate top/thermoplastic edge
W veneer
U high-pressure laminate/universal edge

Prices for Steps 1-7.

		FL	FW	FU
GNTPN.48	**48**	$466	803	466
	60	$552	951	552
	72	$669	1144	669
	84	$836	1478	836
	96	$951	1658	951

	60	**60**	$809	1390	809
		72	$919	1571	919
		84	$1183	2045	1183
		96	$1343	2181	1343
GNTPA.	**48**	**48**	$525	865	525
		60	$615	1011	615
		72	$731	1206	731
		84	$956	1600	956
		96	$1072	1779	1072
	60	**60**	$869	1450	869
		72	$979	1633	979
		84	$1306	2166	1306
		96	$1462	2304	1462

Step 8. Surface Finish

For high-pressure laminate top/thermoplastic edge (L) or high-pressure laminate/universal edge (U)

125	natural maple (CP)	+$0
126	natural cherry (CP)	+$0
127	walnut (CP)	+$0
139	light ash (CP)	+$0
140	warm ash (CP)	+$0
76	light brown walnut	+$0
91	white (CP)	+$0
98	studio white (CP)	+$0
8Q	folkstone grey (CP)	+$0
CL	cool grey neutral	+$0
HF	inner tone light	+$0
HP	light anigre	+$0
LBA	clear on ash (CP)	+$0
LBR	phantom ecru	+$0
LBS	phantom cocoa	+$0
LBU	medium matte walnut (CP)	+$0
LBV	warm grey teak	+$0
LBB	oak on ash (CP)	+$0
LBC	walnut on ash (CP)	+$0
LBF	neutral twill	+$0
LBJ	graphite twill	+$0
LBQ	white twill	+$0
LU	soft white	+$0
WL	warm stone (CP)	+$0
WN	warm grey neutral	+$0

Wood Veneer

For veneer (W)

2U	light brown walnut	+$55
40	dark brown walnut	+$55
ET	clear on ash	+$55
EU	oak on ash	+$55
EV	walnut on ash	+$55

Step 9. Edge Finish

For high-pressure laminate top/thermoplastic edge (L)

125	natural maple (CP)	+$0
126	natural cherry (CP)	+$0
127	walnut (CP)	+$0
139	light ash (CP)	+$0
140	warm ash (CP)	+$0
G1	graphite (CP)	+$0
76	light brown walnut	+$0
8Q	folkstone grey (CP)	+$0
91	white (CP)	+$0
98	studio white (CP)	+$0
CL	cool grey neutral	+$0
LBA	clear on ash (CP)	+$0
LBR	phantom ecru	+$0
LBS	phantom cocoa	+$0
LBU	medium matte walnut (CP)	+$0
LBV	warm grey teak	+$0
LBB	oak on ash (CP)	+$0
LBC	walnut on ash (CP)	+$0
LBF	neutral twill	+$0
LBJ	graphite twill	+$0
LBQ	white twill	+$0
WL	warm stone (CP)	+$0
WN	warm grey neutral	+$0
HF	inner tone light	+$0
HP	light anigre	+$0
LU	soft white	+$0

For high-pressure laminate/universal edge (U)

PLY	plywood edge A	+$50

Meeting End, Rectangular

GNTDG.
GNTDN.

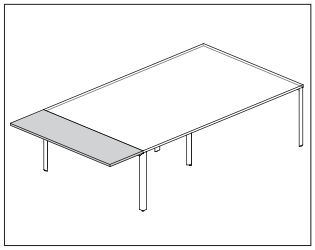

Product Information

Description

This 20″-deep squared-edge surface attaches to 2 sets of meeting end beams positioned at the end of a back-to-back bench application to create a meeting space. It has a laminate top with thermoplastic edge, laminate top with a thermoplastic backed plywood edge, or veneer top and edge. An optional grommet cut-out and grommet is available. Surface is 1⅛″ thick.

Notes

Grommet color matches the laminate color for solid color laminates, and is graphite for all other laminates and veneers.

For each meeting end surface, order 2 fixed attachment hardware packs (GNHPF.) separately.

Dimensions

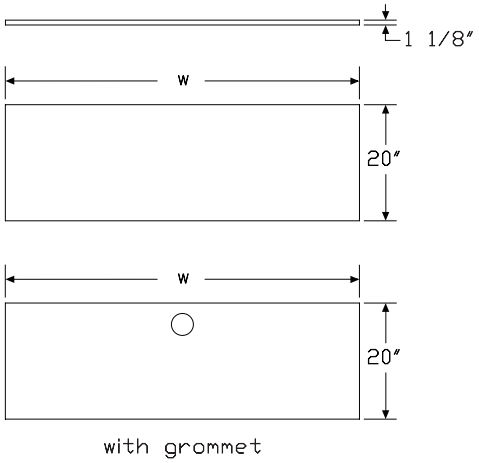

Specification Information

Step 1.

GN

Step 2. Type

TD rectangular meeting end

Step 3. Access Detail

N. no access cut-out
G. grommet

Step 4. Depth

20 20″ deep

Step 5. Width

48 48″ wide
60 60″ wide
72 72″ wide

Step 6. Attachment

F non-sliding

Step 7. Surface Material

L high-pressure laminate top/thermoplastic edge
W veneer
U high-pressure laminate/universal edge

Prices for Steps 1-7.

		FL	FW	FU
GNTDN.20	**48**	$245	413	245
	60	$285	511	285
	72	$351	606	351
GNTDG. 20	**48**	$274	440	274
	60	$315	539	315
	72	$380	635	380

Step 8. Surface Finish

For high-pressure laminate top/thermoplastic edge (L) or high-pressure laminate/universal edge (U)

125	natural maple (CP)	+$0
126	natural cherry (CP)	+$0
139	light ash (CP)	+$0
140	warm ash (CP)	+$0
76	light brown walnut	+$0
91	white (CP)	+$0
98	studio white (CP)	+$0
8Q	folkstone grey (CP)	+$0
CL	cool grey neutral	+$0
HF	inner tone light	+$0
HP	light anigre	+$0
LBA	clear on ash (CP)	+$0
LBR	phantom ecru	+$0
LBS	phantom cocoa	+$0
LBU	medium matte walnut (CP)	+$0
LBV	warm grey teak	+$0
LBB	oak on ash (CP)	+$0
LBC	walnut on ash (CP)	+$0
LBF	neutral twill	+$0
LBJ	graphite twill	+$0
LBQ	white twill	+$0
LU	soft white	+$0
WL	warm stone (CP)	+$0
WN	warm grey neutral	+$0

Wood Veneer

For veneer (W)

2U	light brown walnut	+$55
40	dark brown walnut	+$55
ET	clear on ash	+$55
EU	oak on ash	+$55
EV	walnut on ash	+$55

Step 9. Edge Finish

For high-pressure laminate top/thermoplastic edge (L)

125	natural maple (CP)	+$0
126	natural cherry (CP)	+$0
127	walnut (CP)	+$0
139	light ash (CP)	+$0
140	warm ash (CP)	+$0
G1	graphite (CP)	+$0
76	light brown walnut	+$0
8Q	folkstone grey (CP)	+$0
91	white (CP)	+$0
98	studio white (CP)	+$0
CL	cool grey neutral	+$0
LBA	clear on ash (CP)	+$0
LBR	phantom ecru	+$0
LBS	phantom cocoa	+$0
LBU	medium matte walnut (CP)	+$0
LBV	warm grey teak	+$0
LBB	oak on ash (CP)	+$0
LBC	walnut on ash (CP)	+$0
LBF	neutral twill	+$0
LBJ	graphite twill	+$0
LBQ	white twill	+$0
WL	warm stone (CP)	+$0
WN	warm grey neutral	+$0
HF	inner tone light	+$0
HP	light anigre	+$0
LU	soft white	+$0

For high-pressure laminate/universal edge (U)

PLY	plywood edge A	+$50

Primary Work Surface, 120°

GNTAD.
GNTAF.
GNTAG.
GNTAN.

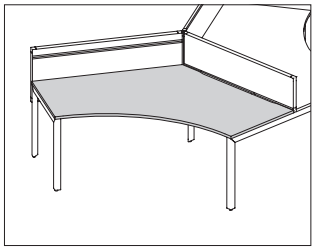

Product Information

Description

This squared-edge surface attaches to one set of 120° beams and Engage legs. It has a laminate top with thermoplastic edge, or a veneer top and edge. Surface is 1⅛″ thick, and has several back edge options depending on application and access required.

Notes

When attaching a monitor arm or other item that clamps to the back edge of a surface, specify the flash gap (F) or flash gap and access door cutout (G).

The flash gap is 0.6″ deep and starts 7⅝″ from each end. It is located on both wings of the surface.

Access door cutout is specified on the left or right wing. For surfaces with access door cutout, an access door (GNPD.) must be ordered separately.

Order fixed attachment hardware pack (GNHDF.) separately.

For quick release attachment, order quick release attachment hardware pack (GNHDA.) separately, in addition to the fixed attachment hardware pack (GNHDF.).

Dimensions

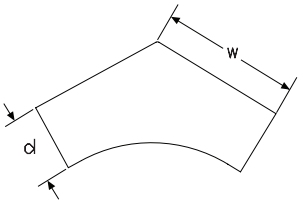

No Flash gap or Access door cutout

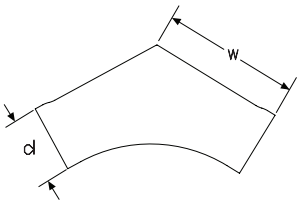

Flash gap

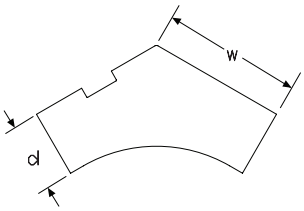

Access door cutout (Left Hand Version)

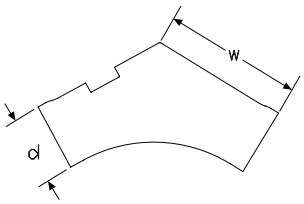

Flash gap and Access door cutout
(Left Hand Version)

Specification Information

Step 1.

GN

Step 2. Type

TA 120° primary surface

Step 3. Access Detail

D. access door cut-out A
G. flash gap and access door cut-out A
N. no flash gap or access door cut-out
F. flash gap

Step 4. Depth

24 24″ deep
30 30″ deep

Step 5. Width

48 48″ wide
54 54″ wide A
60 60″ wide

Step 6. Attachment

For no flash gap or access door cut-out (N.) or flash gap (F.)

F no access door cutout, non-sliding

For access door cut-out (D.) or flash gap and access door cut-out (G.)

L left-hand access, non-sliding
R right-hand access, non-sliding

Step 7. Surface Material

L high-pressure laminate top/thermoplastic edge
W veneer

Prices for Steps 1-7.

			FL	FW	LL	LW	RL	RW
GNTAD.	**24**	**48**	—	—	$635	1083	635	1083
		54	—	—	$667	1129	667	1129
		60	—	—	$823	1400	823	1400
	30	**48**	—	—	$649	1111	649	1111
		54	—	—	$683	1158	683	1158
		60	—	—	$841	1433	841	1433
GNTAG.	**24**	**48**	—	—	$713	1175	713	1175
		54	—	—	$740	1221	740	1221
		60	—	—	$920	1513	920	1513
	30	**48**	—	—	$730	1202	730	1202
		54	—	—	$756	1246	756	1246
		60	—	—	$936	1548	936	1548
GNTAN.	**24**	**48**	$642	1117	—	—	—	—
		54	$676	1168	—	—	—	—
		60	$836	1447	—	—	—	—
	30	**48**	$657	1146	—	—	—	—
		54	$692	1194	—	—	—	—
		60	$853	1478	—	—	—	—
GNTAF.	**24**	**48**	$705	1176	—	—	—	—
		54	$732	1224	—	—	—	—
		60	$908	1520	—	—	—	—
	30	**48**	$717	1207	—	—	—	—
		54	$744	1250	—	—	—	—
		60	$928	1554	—	—	—	—

Step 8. Surface Finish

For high-pressure laminate top/thermoplastic edge (L)

125	natural maple (CP)	+$0
126	natural cherry (CP)	+$0
127	walnut (CP)	+$0
139	light ash (CP)	+$0
140	warm ash (CP)	+$0
76	light brown walnut	+$0
91	white (CP)	+$0
98	studio white (CP)	+$0
8Q	folkstone grey (CP)	+$0
CL	cool grey neutral	+$0
HF	inner tone light	+$0
HP	light anigre	+$0
LBA	clear on ash (CP)	+$0
LBR	phantom ecru	+$0
LBS	phantom cocoa	+$0
LBU	medium matte walnut (CP)	+$0
LBV	warm grey teak	+$0
LBB	oak on ash (CP)	+$0
LBC	walnut on ash (CP)	+$0
LBF	neutral twill	+$0
LBJ	graphite twill	+$0
LBQ	white twill	+$0
LU	soft white	+$0
WL	warm stone (CP)	+$0
WN	warm grey neutral	+$0

Wood Veneer		
For veneer (W)		
2U	light brown walnut	+$55
40	dark brown walnut	+$55
ET	clear on ash	+$55
EU	oak on ash	+$55
EV	walnut on ash	+$55

Step 9. Edge Finish		
For high-pressure laminate top/thermoplastic edge (L)		
125	natural maple (CP)	+$0
126	natural cherry (CP)	+$0
127	walnut (CP)	+$0
139	light ash (CP)	+$0
140	warm ash (CP)	+$0
G1	graphite (CP)	+$0
76	light brown walnut	+$0
8Q	folkstone grey (CP)	+$0
91	white (CP)	+$0
98	studio white (CP)	+$0
CL	cool grey neutral	+$0
HF	inner tone light	+$0
HP	light anigre	+$0
LBA	clear on ash (CP)	+$0
LBR	phantom ecru	+$0
LBS	phantom cocoa	+$0
LBU	medium matte walnut (CP)	+$0
LBV	warm grey teak	+$0
LBB	oak on ash (CP)	+$0
LBC	walnut on ash (CP)	+$0
LBF	neutral twill	+$0
LBJ	graphite twill	+$0
LBQ	white twill	+$0
LU	soft white	+$0
WL	warm stone (CP)	+$0
WN	warm grey neutral	+$0

Hardware Pack, Fixed Surfaces

GNHDF.
GNHOF.
GNHPF.
GNHSF.

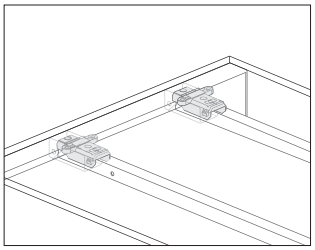

Product Information

Description

This hardware pack is required in order to connect a set of beams to a pair of Engage legs, and to provide a fixed attachment of a surface.

Notes

1 hardware pack is required for each beam kit specified. Meeting end surfaces (**GNTDG.**, GNTDN.) require an additional 2 rectangular primary hardware packs (GNHPF.) per surface.

For Primary Worksurface Rectangular (GNTRx.), Primary Worksurface Rectangular Performance Rail (GNTRR.) and Project Table Rectangular (GNTPx.), specify rectangular primary hardware pack (GNHPF.) for beams up to 78″ wide; for beams 84″ wide and wider specify rectangular primary (84″w and above) hardware pack (**GNHOF.**).

For quick release attachment, a quick release hardware pack (GNHPA., GNHDA.) can be added. Specify 1 hardware pack for each beam kit.

Specification Information

Step 1.

GNH

Step 2. Type

PF.	rectangular primary
OF.	rectangular primary (84″w and above)
DF.	120° - primary
SF.	return

Prices for Steps 1-2.

GNHPF.	$75
GNHOF.	$86
GNHDF.	$162
GNHSF.	$191

Hardware Pack, Quick Release Attachment

GNHDA.
GNHPA.

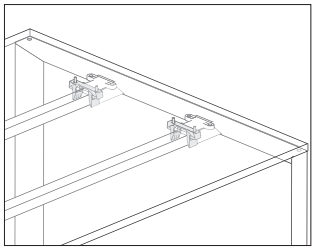

Product Information

Description

This hardware pack provides for the attachment and removal of surfaces without the use of any tools.

Notes

Specify 1 quick release hardware pack for each fixed attachment hardware pack (GNHDF., GNHPF., GNHSF.) specified.

Dimensions

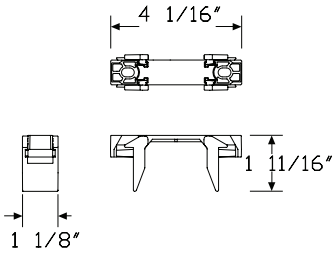

Specification Information

Step 1.

GNH

Step 2. Type

PA. rectangular surface

DA. 120° surface

Prices for Steps 1-2.

GNHPA.	$26
GNHDA.	$42

Hardware Pack - Sliding - Rectangular Primary

GNHRS.

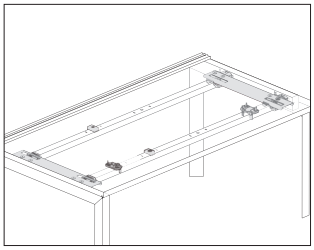

Product Information

Description

This hardware pack attaches a 24″-deep or 30″-deep rectangular primary surface to a set of beams when using a performance rail or when using a non-rail surface with the generic attachment option. It allows the surface to slide, providing access to a cable management tray.

Notes

Specify 1 hardware pack for each sliding surface.

Attaching clamp-mounted components to the back edge of a sliding surface may result in reduced surface extension.

Dimensions

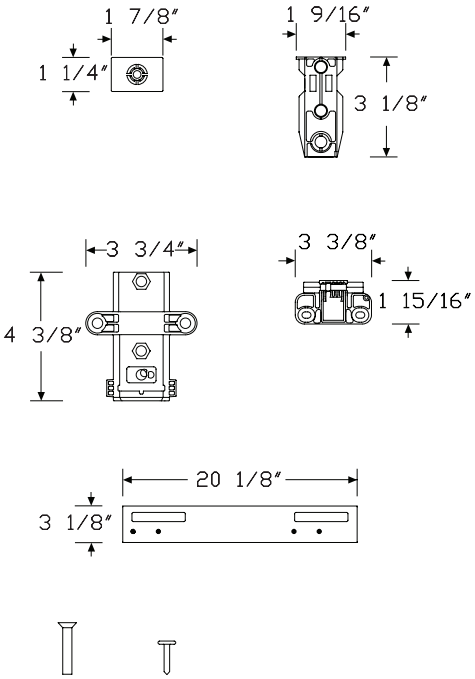

Specification Information

Step 1.

GNHRS. A

Step 2. Depth

24 for 24″-deep surface A

30 for 30″-deep surface A

Prices for Steps 1-2.

GNHRS.	**24**	$276
	30	$276

Pari Screen, Desk Up GNSDXT

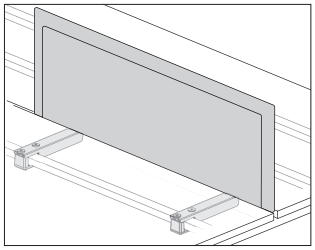

Product Information

Description

This frameless tackable fabric screen provides boundary above a surface at the back edge of a work surface in a back-to-back application. Attachment hardware included.

Notes

Screen width does not need to match beam width.

Extended width screens (GNSDXT.xxxxA) are available for use in 120° applications only. These screens are slightly wider than standard width screens and fill the gap created at the back corner where surfaces meet.

Screen attaches to rear beam with brackets supplied with screen. No additional hardware is needed.

Screen is shared in back-to-back applications.

Each screen ships with an alignment clip for use between screens when placed side-by-side.

All fabric is railroaded.

Screen accepts Customer's Own Material (COM). Yardage is estimated for nondirectional 54″-wide fabrics.

Width—Yardage
36—1.32
39—1.43
42—1.51
48—1.71
54—1.90
60—2.07
66—2.27
72—2.46

For information on multiple quantities or directional fabrics, contact COM Department. See Order Information in Appendices.

Dimensions

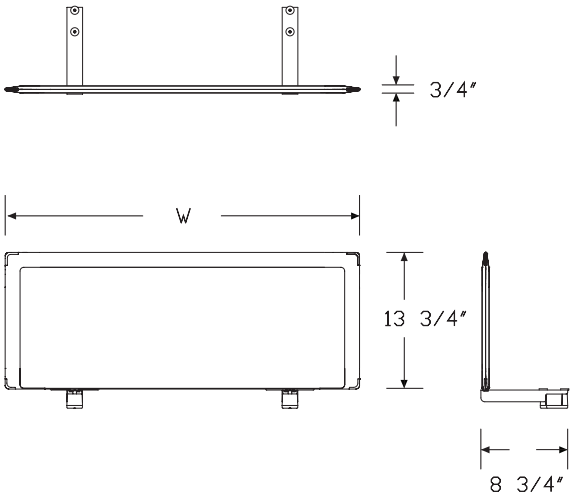

Specification Information

Step 1.

GN

Step 2. Type

SD desk up

Step 3. Configuration

X frameless

Step 4. Material

T. tackable fabric with tapered edge

Step 5. Height

42 42″ high
46 46″ high

Step 6. Width

36 36″ wide
39 39″ wide
42 42″ wide
48 48″ wide
54 54″ wide
60 60″ wide
66 66″ wide
72 72″ wide
48A 48″ wide, for use with 120-degree corner A
54A 54″ wide, for use with 120-degree corner A
60A 60″ wide, for use with 120-degree corner A

Prices for Steps 1-6.

		36	39	42	48	54	60
GNSDXT.	**42**	$872	925	953	995	1049	1110
	46	$896	948	974	1017	1074	1137

		66	72	48A	54A	60A
GNSDXT.	**42**	$1172	1217	995	1049	1110
	46	$1193	1248	1017	1074	1137

Step 7. Paint Finish

Metallic Paint

613	silver (CP)	+$0

Sand Texture Paint

91	white (CP)	+$0
98	studio white (CP)	+$0
BK	black	+$0
G1	graphite (CP)	+$0
UBK	ultra black (CP)	+$0

Step 8. Surface Finish

See application chart and textiles list for fabric usage and numbers. First 2 digits of number indicate fabric line; remaining digit(s) indicate fabric color.

For 36″ wide (36), 39″ wide (39), or 42″ wide (42)

Price Category 1	+$0
Price Category 2	+$13
Price Category 3	+$32
Price Category 4	+$55
Price Category 5	+$111
Price Category B	+$55
Price Category C	+$84
Price Category E	+$127

For 48″ wide (48), 54″ wide (54), 60″ wide (60), 48″ wide, for use with 120-degree corner (48A), 54″ wide, for use with 120-degree corner (54A), or 60″ wide, for use with 120-degree corner (60A)

Price Category 1	+$0
Price Category 2	+$18
Price Category 3	+$43
Price Category 4	+$74
Price Category 5	+$130
Price Category B	+$72
Price Category C	+$84
Price Category E	+$170

For 66″ wide (66) or 72″ wide (72)

Price Category 1	+$0
Price Category 2	+$22
Price Category 3	+$53
Price Category 4	+$91
Price Category 5	+$144
Price Category B	+$80
Price Category C	+$90
Price Category E	+$209

Flat Edge Screen, Desk Up GNSDXS

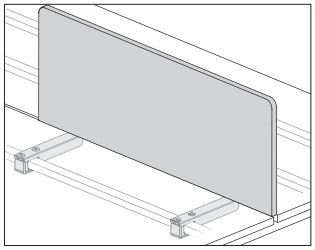

Product Information

Description

This tackable frameless fabric screen provides boundary above a surface at the back edge of the work surface in a back-to-back application. It has a flat edge and comes with an alignment clip to align 2 screens when placed side-by-side. Attachment hardware included.

Notes

Screen width does not need to match beam width.

Screen attaches to rear beam with provided brackets. No additional hardware is required.

When using 78″-wide beams, specify 2 39″-wide screens to provide full screen coverage. When using 84″-wide beams, specify 2 42″-wide screens. When using 96″-wide beams, specify 2 48″-wide screens.

When using screens with 120° beams/surfaces, specify screen widths with the A suffix (48A, 54A, 60A). These screens are slightly wider than their nominal width in order to fill the gap created at the back corner between 2 or 3 120° surfaces.

Screen is shared in back-to-back applications.

All fabric is railroaded.

Screen accepts Customer's Own Material (COM). Yardage is estimated for nondirectional 54″-wide fabrics.

Width—Yardage
36—1.32
39—1.42
42—1.51
48—1.70
54—1.89
60—2.08
66—2.27
72—2.46

For information on multiple quantities or directional fabrics, contact COM Department. See Order Information in Appendices.

Dimensions

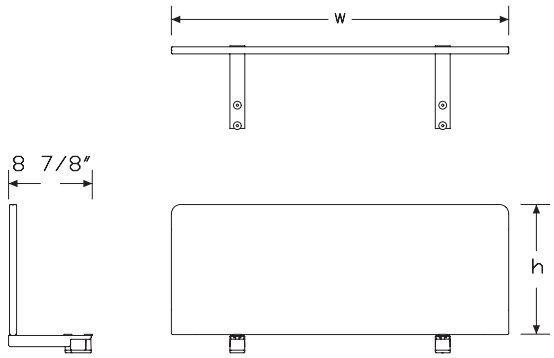

Specification Information

Step 1.

GN A

Step 2. Type

SD desk up A

Step 3. Configuration

X frameless A

Step 4. Material

S. tackable fabric with flat edge A

Step 5. Height

42 42″ high A
46 46″ high A

Step 6. Width

36 36″ wide A
39 39″ wide A
42 42″ wide A
48 48″ wide A
48A 48″ wide, for use with 120-degree corner A
54 54″ wide A
54A 54″ wide, for use with 120-degree corner A
60 60″ wide A
60A 60″ wide, for use with 120-degree corner A
66 66″ wide A
72 72″ wide A

Prices for Steps 1-6.

		36	39	42	48	48A	54
GNSDXS.	**42**	$493	523	551	580	580	609
	46	$517	543	574	602	602	635

		54A	60	60A	66	72
GNSDXS.	**42**	$609	636	636	670	707
	46	$635	668	668	695	738

Step 7. Paint Finish

Metallic Paint

613	silver (CP) A	+$0

Sand Texture Paint

91	white (CP) A	+$0
98	studio white (CP) A	+$0
BK	black A	+$0
G1	graphite (CP) A	+$0
UBK	ultra black (CP) A	+$0

Step 8. Surface Finish

Price Category 1	+$0
Price Category 2	+$14
Price Category 3	+$24
Price Category 4	+$38
Price Category 5	+$111
Price Category B	+$78
Price Category C	+$106
Price Category E	+$163

Layout Studio® Laminate Screen, Desk Up

GNSDL.
GNSDU.

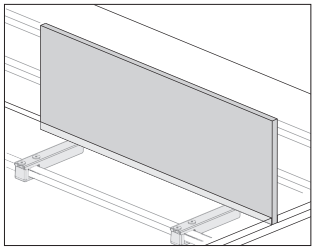

Product Information

Description

This laminate screen provides boundary above a surface at the back edge of a work surface in a back-to-back application. Attachment hardware included.

Notes

Screen attaches to rear beam with included brackets. No additional hardware is needed.

Screen is shared in back-to-back applications.

To align screens in a run and display name tags, order Ubi nametag clip (Y1121.) separately and place over the seam between laminate screens.

Specify screen width to match beam width.

Dimensions

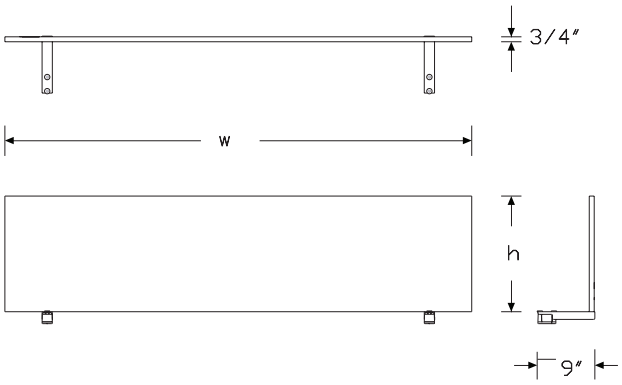

Specification Information

Step 1.

GN A

Step 2. Type

SD desk up A

Step 3. Surface Material

L. high-pressure laminate/thermoplastic edge
U. high-pressure laminate/universal edge

Step 4. Height

42 42″ high
46 46″ high

Step 5. Width

36 36″ wide A
39 39″ wide A
42 42″ wide A
48 48″ wide A
48A 48″ wide, for use with 120-degree corner A
54 54″ wide A
54A 54″ wide, for use with 120-degree corner A
60 60″ wide A
60A 60″ wide, for use with 120-degree corner A
66 66″ wide A
72 72″ wide A

Prices for Steps 1-5.

		36	39	42	48	48A	54
GNSDL.	**42**	$371	393	415	440	440	464
	46	$393	415	440	464	464	488

		54A	60	60A	66	72
GNSDL.	**42**	$464	488	488	500	510
	46	$488	513	513	523	534

GNSDU.	**42**	$371	393	415	440	440	464
	46	$393	415	440	464	464	488

		54A	60	60A	66	72
GNSDU.	**42**	$464	488	488	500	510
	46	$488	513	513	523	534

Step 6. Grain Direction

For 36″ wide (36), 39″ wide (39), 42″ wide (42), 48″ wide (48), 48″ wide, for use with 120-degree corner (48A), 54″ wide (54), 54″ wide, for use with 120-degree corner (54A), 60″ wide (60), or 60″ wide, for use with 120-degree corner (60A)

VTG	vertical grain A	+$0
HRG	horizontal grain A	+$0

For 66″ wide (66) or 72″ wide (72)

HRG	horizontal grain A	+$0

Step 7. Bracket Finish

Metallic Paint

613	silver (CP) A	+$0

Sand Texture Paint

91	white (CP)	+$0
98	studio white (CP)	+$0
BK	black	+$0
G1	graphite (CP)	+$0
UBK	ultra black (CP)	+$0

Step 8. Surface Material

76	light brown walnut	+$0
8Q	folkstone grey (CP)	+$0
91	white (CP)	+$0
98	studio white (CP)	+$0
CL	cool grey neutral	+$0
HP	light anigre	+$0
LBA	clear on ash (CP)	+$0
LBB	oak on ash (CP)	+$0
LBC	walnut on ash (CP)	+$0
LBF	neutral twill	+$0
LBJ	graphite twill	+$0
LBQ	white twill	+$0
LBR	phantom ecru	+$0
LBS	phantom cocoa	+$0
LBU	medium matte walnut (CP)	+$0
LBV	warm grey teak	+$0
LU	soft white	+$0
WL	warm stone (CP)	+$0
WN	warm grey neutral	+$0
X1	chalk white	+$0
125	natural maple (CP) A	+$0
126	natural cherry (CP) A	+$0
127	walnut (CP) A	+$0
139	light ash (CP) A	+$0
140	warm ash (CP) A	+$0
HF	inner tone light A	+$0
LT	light tone A	+$0
ZZ	open line high-pressure laminate (nonstandard) A	+$200

Step 9. Edge Finish

For high-pressure laminate/thermoplastic edge (L.)

125	natural maple (CP) A	+$0
126	natural cherry (CP) A	+$0
127	walnut (CP) A	+$0
139	light ash (CP) A	+$0
140	warm ash (CP) A	+$0
SG	slate grey A	+$0
X1	chalk white A	+$0

Layout Studio® Laminate Screen, Desk Up *continued*

For high-pressure laminate/thermoplastic edge (L.)		
76	light brown walnut	+$0
8Q	folkstone grey (CP)	+$0
91	white (CP)	+$0
98	studio white (CP)	+$0
CL	cool grey neutral	+$0
HF	inner tone light	+$0
HP	light anigre	+$0
LBA	clear on ash (CP)	+$0
LBR	phantom ecru	+$0
LBS	phantom cocoa	+$0
LBU	medium matte walnut (CP)	+$0
LBV	warm grey teak	+$0
LBB	oak on ash (CP)	+$0
LBC	walnut on ash (CP)	+$0
LBF	neutral twill	+$0
LBJ	graphite twill	+$0
LBQ	white twill	+$0
LU	soft white	+$0
WL	warm stone (CP)	+$0
WN	warm grey neutral	+$0

For high-pressure laminate/universal edge (U.)		
PLY	plywood edge	+$50

Framed Screen, Desk Up GNSDNT

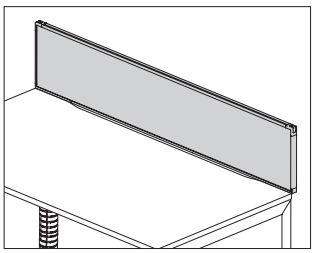

Product Information

Description

This fabric screen provides boundary above a surface at the back edge of a work surface. It is tackable and has a painted metal frame.

The screen can be placed most anywhere along the beam and does not need to match beam widths.

Notes

Screen attaches to rear beam with brackets. Order desk up attachment brackets (GNSA.) separately.

Order the following finishing hardware and connectors separately:

- Connector finishing kit (GNSE.)
- In-line connector kit (GNSH.)
- Post connector kit (GNSJ.)

When used in a back-to-back application, the screen is shared.

All fabric is railroaded.

Screen accepts Customer's Own Material (COM). Yardage is estimated for nondirectional 54″-wide fabrics.

Width—Yardage
36—1.23
42—1.41
48—1.61
54—1.80
60—1.99
66—2.18
72—2.37

For information on multiple quantities or directional fabrics, contact COM Department. See Order Information in Appendices.

Dimensions

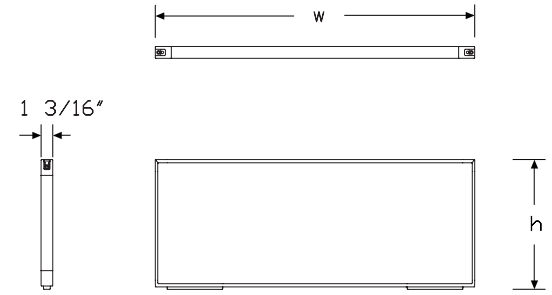

Non Hanging

Specification Information

Step 1.

GN

Step 2. Type

SD desk up

Step 3. Configuration

N non hanging

Step 4. Material

T. tackable fabric

Step 5. Height

42 42″ high
46 46″ high

Step 6. Width

36 36″ wide
42 42″ wide
48 48″ wide
54 54″ wide A
60 60″ wide
66 66″ wide A
72 72″ wide

Prices for Steps 1-6.

		36	42	48	54	60	66
GNSDNT.	**42**	$556	622	655	821	743	935
	46	$575	640	670	846	766	953

		72
GNSDNT.	**42**	$834
	46	$855

Step 7. Trim Finish

613	silver (CP)	+$0
BK	black	+$0
UBK	ultra black (CP)	+$0
91	white (CP)	+$0
98	studio white (CP)	+$0
G1	graphite (CP)	+$0

Step 8. Surface Finish	
See application chart and textiles list for fabric usage and numbers. First 2 digits of number indicate fabric line; remaining digit(s) indicate fabric color.	
Price Category 1	+$0
Price Category 2	+$12
Price Category 3	+$29
Price Category 4	+$50
Price Category 5	+$84

Glass Screen, Desk Up, Frameless GNSDXG

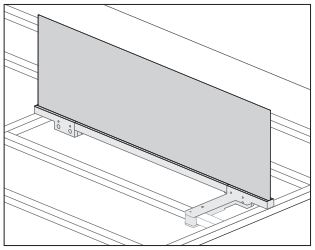

Product Information

Description

This frameless glass screen provides boundary above a surface at the back edge of a work surface in a back-to-back application. It has a painted metal frame. Attachment hardware included.

Notes

Screen attaches to rear beam with brackets supplied with screen. No additional hardware is needed.

Screen is shared and must be used in a back-to-back application.

Dimensions

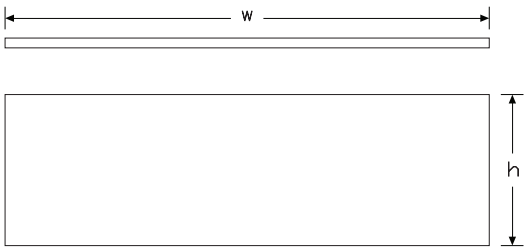

Specification Information

Step 1.

GN

Step 2. Type

SD desk up

Step 3. Configuration

X frameless

Step 4. Material

G. glass

Step 5. Height

42 42″ high
46 46″ high

Step 6. Width

36 36″ wide
42 42″ wide
48 48″ wide
54 54″ wide A
60 60″ wide
66 66″ wide A
72 72″ wide
78 78″ wide A
84 84″ wide
96 96″ wide

Step 7. Surface Finish

TR clear glass - ¼″ thick
5A opal etched - ¼″ thick
NN no glass- for customer's own ¼ thick glass
C3 clear glass - ⅜″ thick
G3 opal glass - ⅜″ thick
N3 no glass, for customer's own ⅜″ thick glass

Prices for Steps 1-7.

		TR	5A	NN	C3	G3	N3
GNSDXG. 42	**36**	$631	739	459	739	865	459
	42	$662	791	490	782	932	490
	48	$692	840	514	835	1011	514
	54	$737	899	545	897	1092	545
	60	$774	953	579	952	1174	579
	66	$823	1011	613	1005	1236	613
	72	$871	1069	643	1058	1297	643
	78	$925	1129	681	1117	1365	681
	84	$1484	1767	1096	1754	2089	1096
	96	$1552	1881	1147	1869	2272	1147
46	**36**	$658	800	459	842	967	459
	42	$696	854	490	845	1044	490
	48	$731	918	514	912	1147	514
	54	$778	990	545	974	1241	545
	60	$827	1066	579	1035	1336	579
	66	$875	1142	613	1115	1453	613
	72	$925	1221	643	1189	1570	643
	78	$977	1296	681	1267	1694	681
	84	$1559	1920	1096	1898	2342	1096
	96	$1635	2057	1147	2047	2577	1147

Step 8. Trim Finish

Metallic Paint		
613	silver (CP)	+$0

Sand Texture Paint		
BK	black	+$0
UBK	ultra black (CP)	+$0

Smooth Paint		
91	white (CP)	+$0
98	studio white (CP)	+$0
G1	graphite (CP)	+$0

Pari Screen, Modesty GNSMXT

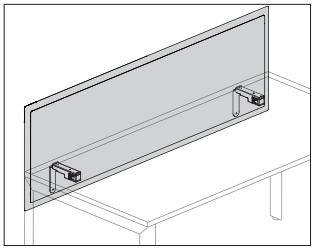

Product Information

Description

This frameless tackable fabric screen provides boundary above and below a surface at the back edge of a work surface in a single-sided application or on a return surface. Attachment hardware included.

Notes

Screen width does not need to match beam width.

Extended width screens (GNSMXT.xxxxA) are available for use in 120° applications only. These screens are slightly wider than standard width screens and fill the gap created at the back corner where surfaces meet.

Screen attaches to rear beam with brackets that are provided; no additional attachment hardware is required.

Screen will hang approximately 9¾″ below the surface.

Each screen ships with an alignment clip for use between screens when placed side-by-side.

All fabric is railroaded.

Screen accepts Customer's Own Material (COM). Yardage is estimated for nondirectional 54″-wide fabrics.

Width—Yardage
36—2.66
39—2.83
42—3.02
48—3.41
54—3.78
60—4.17
66—4.54
72—4.92

For information on multiple quantities or directional fabrics, contact COM Department. See Order Information in Appendices.

Dimensions

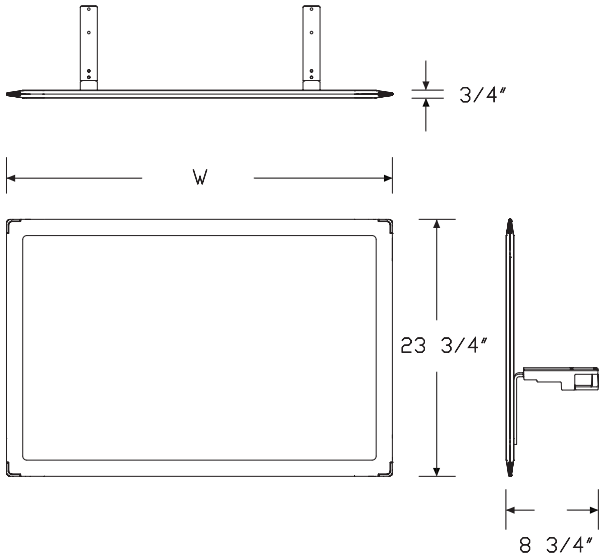

Specification Information

Step 1.

GN

Step 2. Type

SM modesty

Step 3. Configuration

X frameless

Step 4. Material

T. tackable fabric with tapered edge

Step 5. Height

42 42″ high
46 46″ high

Step 6. Width

36 36″ wide
39 39″ wide
42 42″ wide
48 48″ wide
54 54″ wide
60 60″ wide
66 66″ wide
72 72″ wide
48A 48″ wide, for use with 120-degree corner A
54A 54″ wide, for use with 120-degree corner A
60A 60″ wide, for use with 120-degree corner A

Prices for Steps 1-6.

		36	39	42	48	54	60
GNSMXT.	**42**	$928	984	1016	1058	1116	1175
	46	$951	1009	1037	1079	1144	1209

		66	72	48A	54A	60A
GNSMXT.	**42**	$1243	1296	1058	1116	1175
	46	$1268	1331	1079	1144	1209

Step 7. Paint Finish

Metallic Paint

613 silver (CP) +$0

Sand Texture Paint

BK black +$0

Smooth Paint

91 white (CP) +$0
98 studio white (CP) +$0
G1 graphite (CP) +$0
UBK ultra black (CP) +$0

Step 8. Surface Finish

See application chart and textiles list for fabric usage and numbers. First 2 digits of number indicate fabric line; remaining digit(s) indicate fabric color.

For 36″ wide (36), 39″ wide (39), or 42″ wide (42)

Price Category 1	+$0
Price Category 2	+$26
Price Category 3	+$64
Price Category 4	+$110
Price Category 5	+$155
Price Category B	+$55
Price Category C	+$84
Price Category E	+$253

For 48″ wide (48), 54″ wide (54), 60″ wide (60), 48″ wide, for use with 120-degree corner (48A), 54″ wide, for use with 120-degree corner (54A), or 60″ wide, for use with 120-degree corner (60A)

Price Category 1	+$0
Price Category 2	+$35
Price Category 3	+$84
Price Category 4	+$146
Price Category 5	+$205
Price Category B	+$72
Price Category C	+$84
Price Category E	+$336

For 66″ wide (66) or 72″ wide (72)

Price Category 1	+$0
Price Category 2	+$44
Price Category 3	+$107
Price Category 4	+$186
Price Category 5	+$265
Price Category B	+$160
Price Category C	+$90
Price Category E	+$426

Flat Edge Screen, Modesty GNSMXS

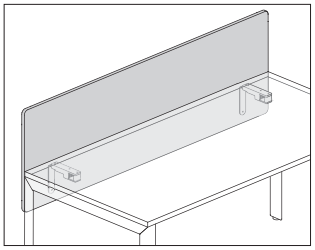

Product Information

Description

This tackable frameless fabric screen provides boundary above and below a surface at the back edge of the work surface in a single-sided application or on a return surface. It has a flat edge and comes with an alignment clip to align 2 screens when placed side-by-side. Attachment hardware included.

Notes

Screen width does not need to match beam width.

Screen attaches to rear beam with provided brackets. No additional hardware is required.

Screen extends approximately 9½″ below the surface.

When using 78″-wide beams, specify 2 39″-wide screens to provide full screen coverage. When using 84″-wide beams, specify 2 42″-wide screens. When using 96″-wide beams, specify 2 48″-wide screens.

All fabric is railroaded.

Screen accepts Customer's Own Material (COM). Yardage is estimated for nondirectional 54″-wide fabrics.

For 42″ high:

Width—Yardage

36—1.32

39—1.42

42—1.51

48—1.70

54—1.89

60—2.08

66—2.27

72—2.46

For 46″ high:

Width—Yardage

36—2.65

39—2.84

42—3.02

48—3.40

54—3.78

60—4.16

66—4.54

72—4.91

For information on multiple quantities or directional fabrics, contact COM Department. See Order Information in Appendices.

Dimensions

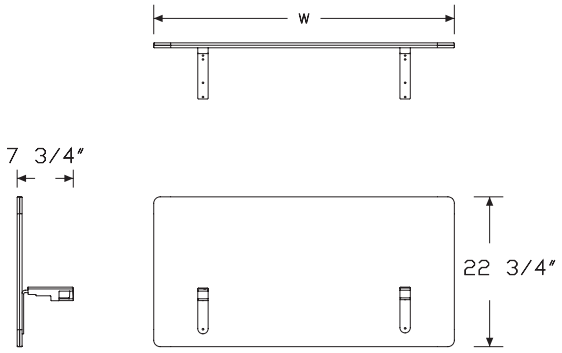

Specification Information

Step 1.

GN A

Step 2. Type

SM modesty A

Step 3. Configuration

X frameless A

Step 4. Material

S. tackable fabric with flat edge A

Step 5. Height

42 42″ high A
46 46″ high A

Step 6. Width

36 36″ wide A
39 39″ wide A
42 42″ wide A
48 48″ wide A
48A 48″ wide, for use with 120-degree corner A
54 54″ wide A
54A 54″ wide, for use with 120-degree corner A
60 60″ wide A
60A 60″ wide, for use with 120-degree corner A
66 66″ wide A
72 72″ wide A

Prices for Steps 1-6.

		36	39	42	48	48A	54
GNSMXS.	**42**	$709	741	771	803	803	835
	46	$733	763	794	823	823	863

		54A	60	60A	66	72
GNSMXS.	**42**	$835	867	867	907	949
	46	$863	899	899	931	980

Step 7. Paint Finish

Metallic Paint

613	silver (CP) A	+$0

Sand Texture Paint

91	white (CP) A	+$0
98	studio white (CP) A	+$0
BK	black A	+$0
G1	graphite (CP) A	+$0
UBK	ultra black (CP) A	+$0

Step 8. Surface Finish

Price Category 1	+$0
Price Category 2	+$14
Price Category 3	+$24
Price Category 4	+$38
Price Category 5	+$111
Price Category B	+$79
Price Category C	+$107
Price Category E	+$163

Layout Studio® Laminate Screen, Modesty

GNSML.
GNSMU.

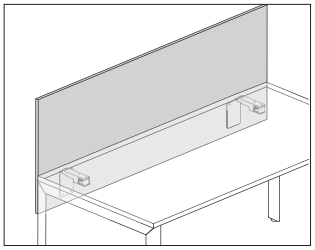

Product Information

Description

This laminate screen provides boundary above and below a surface at the back edge of the work surface in a single-sided application or on a return surface. Attachment hardware included.

Notes

Screen width does not need to match beam width.

Screen attaches to rear beam with included brackets. No additional hardware is needed.

Screen extends approximately 10⅛″ below the surface.

When using 78″-wide beams, specify 2 39″-wide screens to provide full screen coverage. When using 84″-wide beams, specify 2 42″-wide screens. When using 96″-wide beams, specify 2 48″-wide screens.

To align screens in a run and display name tags, order Ubi nametag clip (Y1121.) separately and place over the seam between laminate screens.

Dimensions

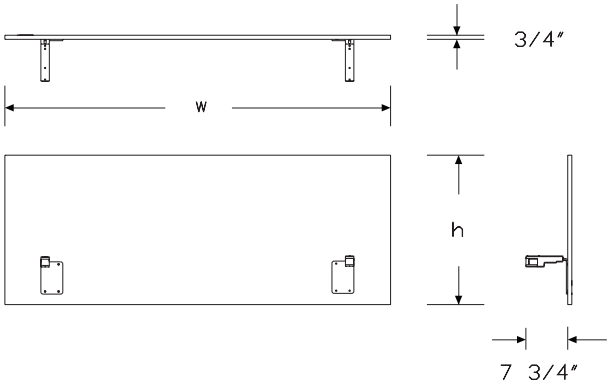

Specification Information

Step 1.

GN A

Step 2. Type

SM modesty A

Step 3. Surface Material

L. thermally-fused laminate/thermoplastic edge A

U. thermally-fused laminate/universal edge A

Step 4. Height

42 42″ high A

46 46″ high A

Step 5. Width

36 36″ wide A

39 39″ wide A

42 42″ wide A

48 48″ wide A

48A 48″ wide, for use with 120-degree corner A

54 54″ wide A

54A 54″ wide, for use with 120-degree corner A

60 60″ wide A

60A 60″ wide, for use with 120-degree corner A

66 66″ wide A

72 72″ wide A

Prices for Steps 1-5.

		36	39	42	48	48A	54
GNSML.	**42**	$456	472	486	500	500	514
	46	$485	499	513	525	525	540

		54A	60	60A	66	72
GNSML.	**42**	$514	526	526	545	563
	46	$540	553	553	571	589

GNSMU.	**42**	$456	472	486	500	500	514
	46	$485	499	513	525	525	540

		54A	60	60A	66	72
GNSMU.	**42**	$514	526	526	545	563
	46	$540	553	553	571	589

Step 6. Grain Direction		
For 36″ wide (36), 39″ wide (39), 42″ wide (42), 48″ wide (48), 48″ wide, for use with 120-degree corner (48A), 54″ wide (54), 54″ wide, for use with 120-degree corner (54A), 60″ wide (60), or 60″ wide, for use with 120-degree corner (60A)		
VTG	vertical grain A	+$0
HRG	horizontal grain A	+$0
For 66″ wide (66) or 72″ wide (72)		
HRG	horizontal grain A	+$0

Step 7. Bracket Finish		
Metallic Paint		
613	silver (CP) A	+$0
Sand Texture Paint		
BK	black A	+$0
UBK	ultra black (CP) A	+$0
Smooth Paint		
91	white (CP) A	+$0
98	studio white (CP) A	+$0
G1	graphite (CP) A	+$0

Step 8. Surface Finish		
125	natural maple (CP) A	+$0
126	natural cherry (CP) A	+$0
127	walnut (CP) A	+$0
139	light ash (CP) A	+$0
140	warm ash (CP) A	+$0
76	light brown walnut A	+$0
8Q	folkstone grey (CP) A	+$0
91	white (CP) A	+$0
98	studio white (CP) A	+$0
CL	cool grey neutral A	+$0
HP	light anigre A	+$0
LBA	clear on ash (CP) A	+$0
LBB	oak on ash (CP) A	+$0
LBC	walnut on ash (CP) A	+$0
LBF	neutral twill A	+$0
LBJ	graphite twill A	+$0
LBQ	white twill A	+$0
LBR	phantom ecru A	+$0
LBS	phantom cocoa A	+$0
LBU	medium matte walnut (CP) A	+$0
LBV	warm grey teak A	+$0
LU	soft white A	+$0
WL	warm stone (CP) A	+$0
WN	warm grey neutral A	+$0
X1	chalk white A	+$0

Step 9. Edge Finish

For thermally-fused laminate/thermoplastic edge (L.)

125	natural maple (CP) A	+$0
126	natural cherry (CP) A	+$0
127	walnut (CP) A	+$0
139	light ash (CP) A	+$0
140	warm ash (CP) A	+$0
76	light brown walnut A	+$0
8Q	folkstone grey (CP) A	+$0
91	white (CP) A	+$0
98	studio white (CP) A	+$0
CL	cool grey neutral A	+$0
HF	inner tone light A	+$0
HP	light anigre A	+$0
LBA	clear on ash (CP) A	+$0
LBR	phantom ecru A	+$0
LBS	phantom cocoa A	+$0
LBU	medium matte walnut (CP) A	+$0
LBV	warm grey teak A	+$0
LBB	oak on ash (CP) A	+$0
LBC	walnut on ash (CP) A	+$0
LBF	neutral twill A	+$0
LBJ	graphite twill A	+$0
LBQ	white twill A	+$0
LU	soft white A	+$0
WL	warm stone (CP) A	+$0
WN	warm grey neutral A	+$0

For thermally-fused laminate/universal edge (U.)

PLY	plywood edge A	+$50

Personal Side Screen, Delineation GNSPXT

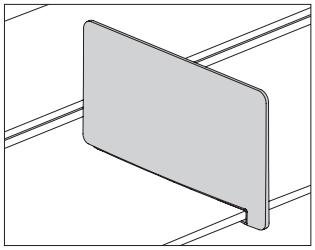

Product Information

Description

This tackable frameless fabric screen provides boundary between workers seated side-by-side, and attaches to the front edge of a squared-edge Layout Studio® surface. It has an edge profile that is complementary to both Pari and flat-edge screens.

Notes

Screen is 13″H×22″D.

Mid-run (M) screen can be placed anywhere along the front edge of a back-to-back application, except directly above an end leg, or above an intermediate leg on a single-sided application. Screen can be moved by the user.

All fabric is railroaded.

Dimensions

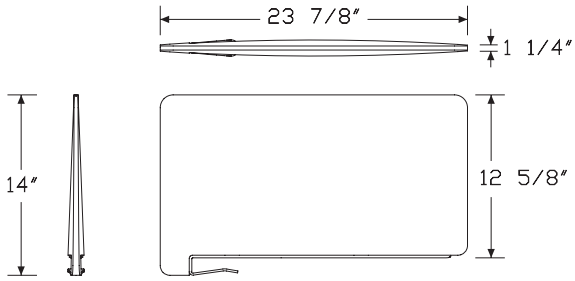

Specification Information

Step 1.

GN A

Step 2. Type

SP	delineation A	

Step 3. Configuration

XT.	frameless fabric A	

Step 4. Placement

M	mid-run on back-to-back applications A	

Prices for Steps 1-4.

GNSPXT. M	$492

Step 5. Bracket Finish

Metallic Paint

613	silver (CP) A	+$0

Sand Texture Paint

UBK	ultra black (CP) A	+$0
91	white (CP) A	+$0
98	studio white (CP) A	+$0
BK	black A	+$0
G1	graphite (CP) A	+$0

Step 6. Surface Finish

Price Category 5	+$44
Price Category 1	+$0
Price Category 2	+$7
Price Category 3	+$12
Price Category 4	+$25

Framed Screen, Delineation GNSPNT

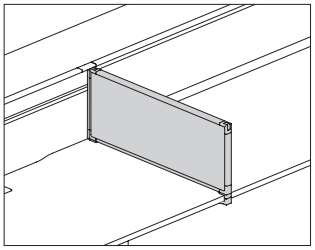

Product Information

Description

This fabric screen provides boundary between people seated side-by-side and attaches to the front edge of a squared-edge Layout Studio surface. It is tackable and has a painted metal frame.

Notes

Screen can be placed anywhere along front edge of a surface except on top of a desk end leg.

Screen width aligns with the depth of a work surface with flash gap.

Screen attaches to front edge of a work surface with a bracket. Order delineation screen attachment bracket (GNSC.) separately.

Order connector finishing kit (GNSE.) separately.

All fabric is railroaded.

Screen accepts Customer's Own Material (COM). Yardage is estimated for nondirectional 54″-wide fabrics.

Width—Yardage

24—0.84

30—1.00

36—1.19

For information on multiple quantities or directional fabrics, contact COM Department. See Order Information in Appendices.

Dimensions

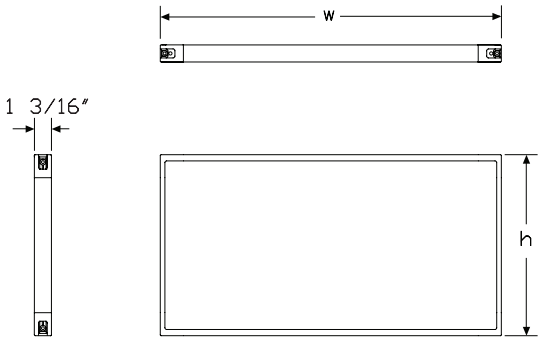

Specification Information

Step 1.

GN

Step 2. Type

SP delineation

Step 3. Configuration

N non hanging

Step 4. Material

T. tackable fabric

Step 5. Height

42 42″ high

46 46″ high

Step 6. Width

24 24″ wide

30 30″ wide

36 36″ wide

Prices for Steps 1-6.

		24	30	36
GNSPNT.	**42**	$387	454	516
	46	$406	477	536

Step 7. Trim Finish

Metallic Paint

613	silver (CP)	+$0

Sand Texture Paint

BK	black	+$0
UBK	ultra black (CP)	+$0

Smooth Paint

91	white (CP)	+$0
98	studio white (CP)	+$0
G1	graphite (CP)	+$0

Step 8. Surface Finish	
See application chart and textiles list for fabric usage and numbers. First 2 digits of number indicate fabric line; remaining digit(s) indicate fabric color.	
Price Category 1	+$0
Price Category 2	+$10
Price Category 3	+$22
Price Category 4	+$38
Price Category 5	+$65

Screen Brackets

GNSA.
GNSB.
GNSC.

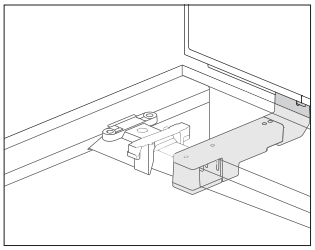

Product Information

Description

These brackets provide the attachment for the desk up, modesty, and delineation screens.

Notes

Specify 1 package for each screen.

Dimensions

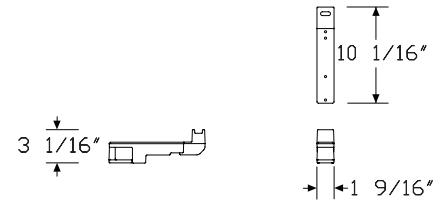

Desk Up

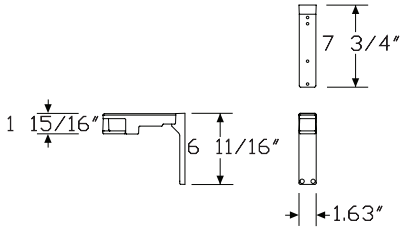

Modesty

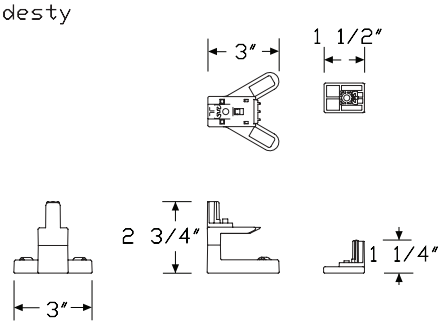

Delineation

Specification Information

Step 1.

GNS

Step 2. Type

A.	desk up
B.	modesty
C.	delineation

Prices for Steps 1-2.

GNSA.	$153
GNSB.	$246
GNSC.	$73

Step 3. Finish

Metallic Paint

613	silver (CP)	+$0

Sand Texture Paint

BK	black	+$0
UBK	ultra black (CP)	+$0

Smooth Paint

91	white (CP)	+$0
98	studio white (CP)	+$0
G1	graphite (CP)	+$0

Screen Connectors

GNSE.
GNSH.
GNSJ.

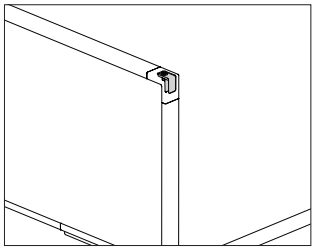

Product Information

Description

These connectors finish the exposed corners of a screen. Quantity of 2.

Notes

Specify the finishing kit (GNSE.) to finish the corner of a screen when not connecting to another screen or corner post.

Specify the in-line connector kit (GNSH.) where 2 screens meet.

Specify the post connector kit (GNSJ.) when connecting a screen to a corner post.

When using desk up screens, appropriate kits must be specified for the top of the screen only.

Modesty screens require kits for the top and bottom of the screen.

Dimensions

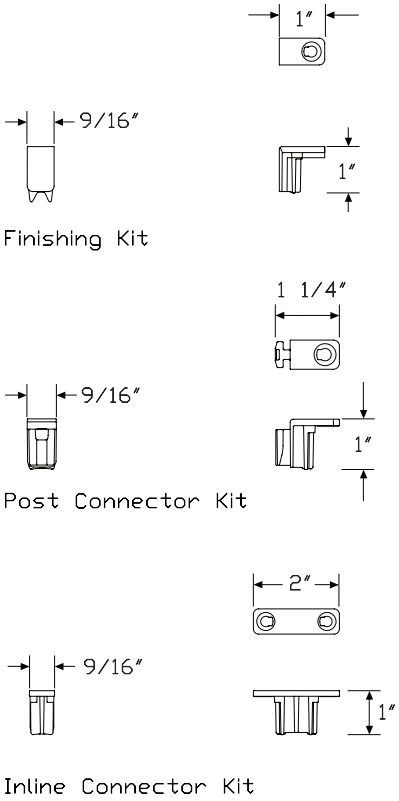

Specification Information

Step 1.

GN

Step 2. Type

SE.	finishing kit
SH.	inline connector kit
SJ.	post connector kit

Prices for Steps 1-2.

GNSE.	$24
GNSH.	$25
GNSJ.	$23

Step 3. Trim Finish

Metallic Paint

613	silver (CP)	+$0

Sand Texture Paint

BK	black	+$0
UBK	ultra black (CP)	+$0

Smooth Paint

91	white (CP)	+$0
98	studio white (CP)	+$0
G1	graphite (CP)	+$0

Corner Post

GNSND.
GNSNM.

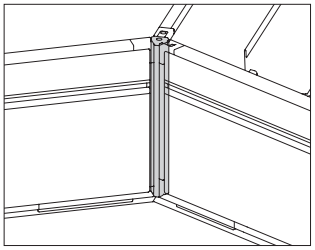

Product Information

Description

This corner post fills the open space created when screens come together at 120°.

Notes

Specify corner post to match height of attaching screens.

Dimensions

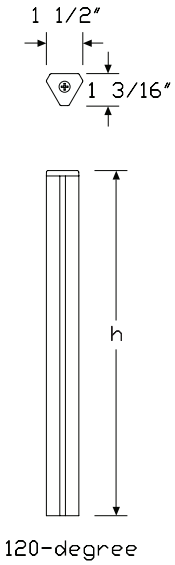

Specification Information

Step 1.

GN

Step 2. Type

SN	120°

Step 3. Configuration

D.	desk up
M.	modesty

Step 4. Height

42	42″ high
46	46″ high

Prices for Steps 1-4.

GNSND.	**42**	$50
	46	$61
GNSNM.	**42**	$67
	46	$75

Step 5. Trim Finish

613	silver (CP)	+$0
91	white (CP)	+$0
G1	graphite (CP)	+$0

Frameless Glass Screen Filler Kit GNSX.

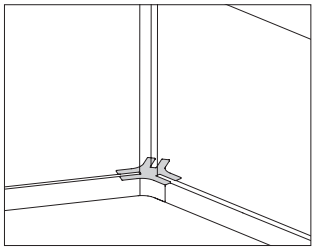

Product Information

Description

This trim piece fills the gap between 3 frameless glass screens in a 120° corner application.

Dimensions

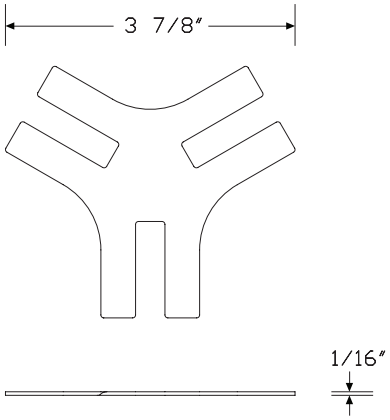

Specification Information

Step 1.

GN

Step 2. Type

SX.	frameless screen filler for 120-degree applications

Step 3. Application

A	¼″ glass
B	⅜″ glass

Prices for Steps 1-3.

GNSX.	**A**	$21
	B	$21

Step 4. Trim Finish

Metallic Paint

613	silver (CP)	+$0

Sand Texture Paint

91	white (CP)	+$0
98	studio white (CP)	+$0
BK	black	+$0
G1	graphite (CP)	+$0
UBK	ultra black (CP)	+$0

Gallery Panel, Leg-Attached GNSTA.

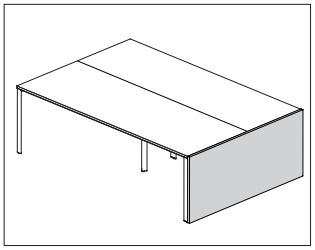

Product Information

Description

This gallery panel attaches to an Engage desk end leg. It has a laminate surface with thermoplastic edge, laminate surface with a thermoplastic backed plywood edge, or veneer surface and edge. Attachment hardware included.

Notes

Top of 29″-high panel aligns with top of a primary surface; top of 42″- and 46″-high panels align with top of a desk up or modesty screen.

All gallery panels are nonhanded. 24″- and 30″-wide panels will work on both right-hand and left-hand single desk end legs.

Grain direction is vertical on veneer, wood-grain and directional laminates for 24″-60″ widths.

Wood-grain and directional laminates are not available on 72″-wide gallery panels and are not a recommended application when using ZZ open line wood-grain or directional laminates.

For additional sizes, see Vary Easy Program in appendices.

Dimensions

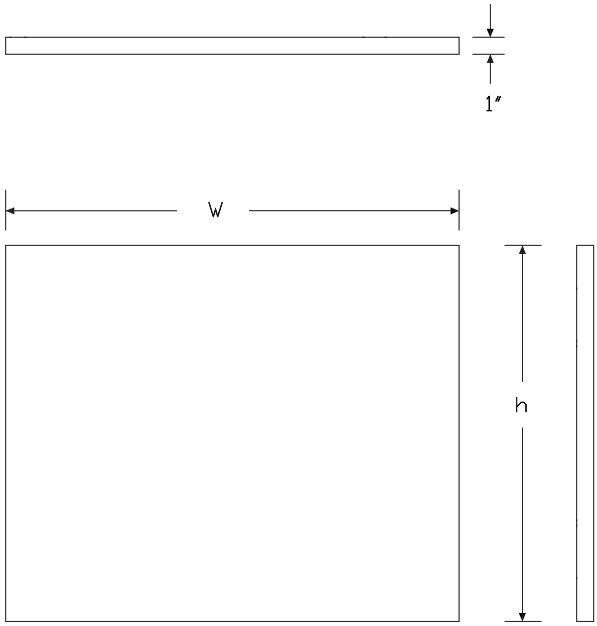

Specification Information

Step 1.

GN

Step 2. Type

ST gallery panel

Step 3. Configuration

A. leg-attached

Step 4. Height

29 29″ high
42 42″ high
46 46″ high

Step 5. Width

24 24″ wide
30 30″ wide
36 36″ wide
48 48″ wide
60 60″ wide
72 72″ wide

Step 6. Surface Material

L high-pressure laminate top/thermoplastic edge
W veneer
U high-pressure laminate/universal edge

Prices for Steps 1-6.

			L	W	U
GNSTA.	**29**	**24**	$337	732	337
		30	$372	806	372
		36	$403	875	403
		48	$522	1142	522
		60	$645	1413	645
		72	$769	1685	769
	42	**24**	$396	863	396
		30	$423	925	423
		36	$466	1017	466
		48	$629	1371	629
		60	$775	1699	775
		72	$927	2025	927

46	**24**	$406	882	406
	30	$437	956	437
	36	$499	1090	499
	48	$654	1433	654
	60	$814	1782	814
	72	$969	2126	969

Step 7. Surface Finish

For 24″ wide (24), 30″ wide (30), 36″ wide (36), 48″ wide (48), or 60″ wide (60) with high-pressure laminate top/thermoplastic edge (L), or high-pressure laminate/universal edge (U)

125	natural maple (CP)	+$0
126	natural cherry (CP)	+$0
127	walnut (CP)	+$0
139	light ash (CP)	+$0
140	warm ash (CP)	+$0
76	light brown walnut	+$0
91	white (CP)	+$0
98	studio white (CP)	+$0
8Q	folkstone grey (CP)	+$0
CL	cool grey neutral	+$0
HF	inner tone light	+$0
HP	light anigre	+$0
LBA	clear on ash (CP)	+$0
LBR	phantom ecru	+$0
LBS	phantom cocoa	+$0
LBU	medium matte walnut (CP)	+$0
LBV	warm grey teak	+$0
LBB	oak on ash (CP)	+$0
LBC	walnut on ash (CP)	+$0
LBF	neutral twill	+$0
LBJ	graphite twill	+$0
LBQ	white twill	+$0
LU	soft white	+$0
WL	warm stone (CP)	+$0
WN	warm grey neutral	+$0

Wood Veneer

For veneer (W)

2U	light brown walnut	+$55
40	dark brown walnut	+$55
ET	clear on ash	+$55
EU	oak on ash	+$55
EV	walnut on ash	+$55

Solid-Color Laminate Top/Thermoplastic Edge

For 72″ wide (72) with high-pressure laminate top/thermoplastic edge (L), or high-pressure laminate/universal edge (U)

8Q	folkstone grey (CP)	+$0
91	white (CP)	+$0
98	studio white (CP)	+$0
WL	warm stone (CP)	+$0
WN	warm grey neutral	+$0

Step 8. Bracket Finish

Metallic Paint

613	silver (CP)	+$0

Sand Texture Paint

91	white (CP)	+$0
98	studio white (CP)	+$0
BK	black	+$0
G1	graphite (CP)	+$0
UBK	ultra black (CP)	+$0

Step 9. Edge Finish

For 24″ wide (24), 30″ wide (30), 36″ wide (36), 48″ wide (48), 60″ wide (60), or 72″ wide (72) with high-pressure laminate top/thermoplastic edge (L)

125	natural maple (CP)	+$0
126	natural cherry (CP)	+$0
127	walnut (CP)	+$0
139	light ash (CP)	+$0
140	warm ash (CP)	+$0
G1	graphite (CP)	+$0
76	light brown walnut	+$0
8Q	folkstone grey (CP)	+$0
91	white (CP)	+$0
98	studio white (CP)	+$0
CL	cool grey neutral	+$0
HF	inner tone light	+$0
HP	light anigre	+$0
LBA	clear on ash (CP)	+$0
LBR	phantom ecru	+$0
LBS	phantom cocoa	+$0
LBU	medium matte walnut (CP)	+$0
LBV	warm grey teak	+$0
LBB	oak on ash (CP)	+$0
LBC	walnut on ash (CP)	+$0
LBF	neutral twill	+$0
LBJ	graphite twill	+$0
LBQ	white twill	+$0
LU	soft white	+$0
WL	warm stone (CP)	+$0
WN	warm grey neutral	+$0

For high-pressure laminate/universal edge (U)

PLY	plywood edge A	+$50

Pari Screen, End of Run GNSFXT

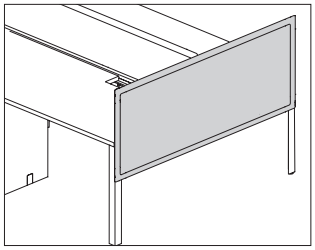

Product Information

Description

This tackable frameless fabric screen attaches to the outside of a Layout Studio® double end leg and provides boundary above and slightly below a surface at the end of a bench or table. Attachment hardware included.

Notes

Screens attach to Layout Studio infrastructure with included hardware; no additional attaching hardware is required.

Screen width must match the depth of leg next to which it will be placed.

All fabric is railroaded.

Screen accepts Customer's Own Material (COM). Yardage is estimated for nondirectional 54"-wide fabrics.

Width—Yardage

48—1.75

60—2.10

For information on multiple quantities or directional fabrics, contact COM Department. See Order Information in Appendices.

Dimensions

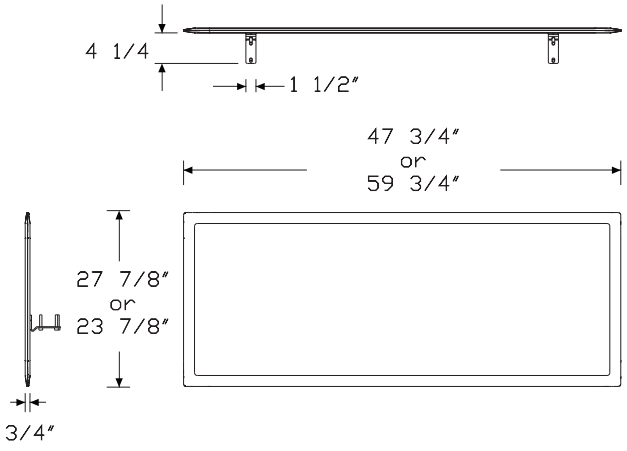

Specification Information

Step 1.

GNSFXT. A

Step 2. Height

42	42" high A
46	46" high A

Step 3. Width

48	48" wide A
60	60" wide A

Prices for Steps 1-3.

		48	**60**
GNSFXT.	**42**	$901	1003
	46	$986	1103

Step 4. Bracket Finish

Metallic Paint

613	silver (CP) A	+$0

Sand Texture Paint

91	white (CP) A	+$0
98	studio white (CP) A	+$0
BK	black A	+$0
G1	graphite (CP) A	+$0
UBK	ultra black (CP) A	+$0

Step 5. Surface Finish

Price Category 1	+$0
Price Category 2	+$18
Price Category 3	+$41
Price Category 4	+$70
Price Category 5	+$105
Price Category B	+$76
Price Category C	+$103
Price Category E	+$157

Pari Screen, Delineation GNSPXP

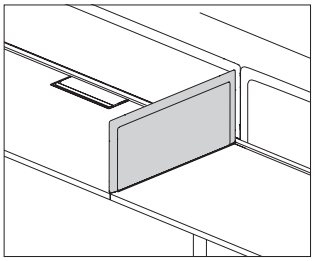

Product Information

Description

This tackable fabric screen provides boundary between workers seated side-by-side, and attaches to a squared-edge Layout Studio® surface.

Notes

All fabric is railroaded.

For screen attachment in middle of run, use either left-hand bracket (GNSD.PNxxEL) or right-hand bracket (GNSD.PNxxER), ordered separately.

Screen accepts Customer's Own Material (COM). Yardage is estimated for nondirectional 54″-wide fabrics.

Width—Yardage

24—0.92

30—1.10

For information on multiple quantities or directional fabrics, contact COM Department. See Order Information in Appendices.

Dimensions

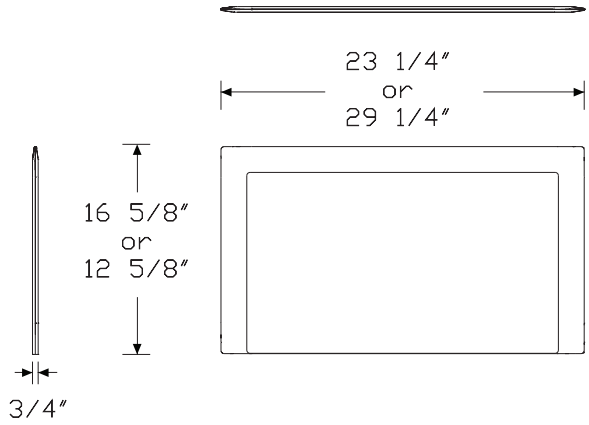

Specification Information

Step 1.

GNSPXP. A

Step 2. Height

42 42″ high A

46 46″ high A

Step 3. Width

24 24″ wide A

30 30″ wide A

Step 4. Location

EL end-of-run, left-hand A

ER end-of-run, right-hand A

Prices for Steps 1-4.

			EL	ER
GNSPXP.	**42**	**24**	$675	675
		30	$698	698
	46	**24**	$711	711
		30	$738	738

Step 5. Bracket Finish

613	silver (CP) A	+$0

Step 6. Surface Finish

Price Category 1	+$0
Price Category 2	+$10
Price Category 3	+$23
Price Category 4	+$38
Price Category 5	+$55
Price Category B	+$42
Price Category C	+$58
Price Category E	+$0

Flat Edge Screen, Delineation GNSPXS

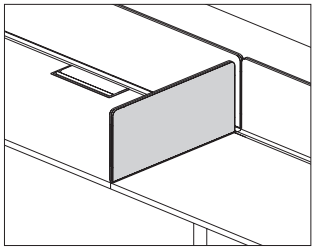

Product Information

Description

This tackable fabric screen provides boundary between workers seated side-by-side, and attaches to a squared-edge Layout Studio® surface.

Notes

All fabric is railroaded.

For screen attachment in middle of run, use either left-hand bracket (GNSD.SNxxEL) or right-hand bracket (GNSD.SNxxER), ordered separately.

Screen accepts Customer's Own Material (COM). Yardage is estimated for nondirectional 54″-wide fabrics.

Width—Yardage

24—0.92

30—1.10

For information on multiple quantities or directional fabrics, contact COM Department. See Order Information in Appendices.

Dimensions

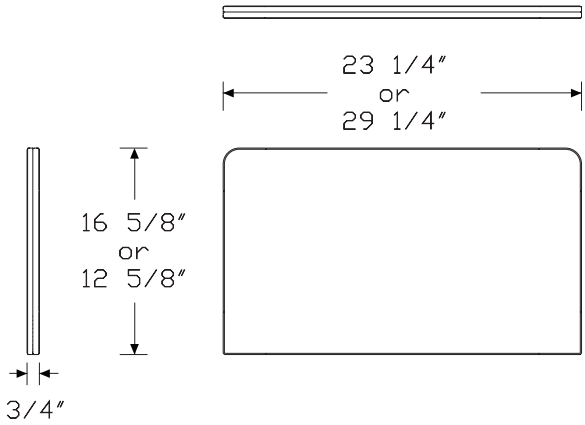

Specification Information

Step 1.

GNSPXS. A

Step 2. Height

42 42″ high A

46 46″ high A

Step 3. Width

24 24″ wide A

30 30″ wide A

Step 4. Location

EL end-of-run, left-hand A

ER end-of-run, right-hand A

Prices for Steps 1-4.

			EL	ER
GNSPXS.	**42**	**24**	$435	435
		30	$470	470
	46	**24**	$470	470
		30	$511	511

Step 5. Bracket Finish

613 silver (CP) A +$0

Step 6. Surface Finish

Price Category 1	+$0
Price Category 2	+$7
Price Category 3	+$12
Price Category E	+$0

Generic Beam Clamp GNSG.

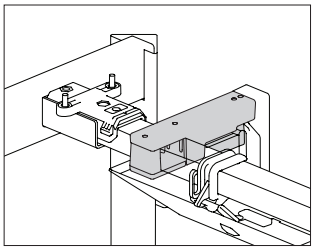

Product Information

Description

These beam clamps are used to attach a single-sided cable management tray.

Notes

If screens are being used, generic beam clamps are not required.

Specified as a single clamp. Order 2 for each cable management tray.

Dimensions

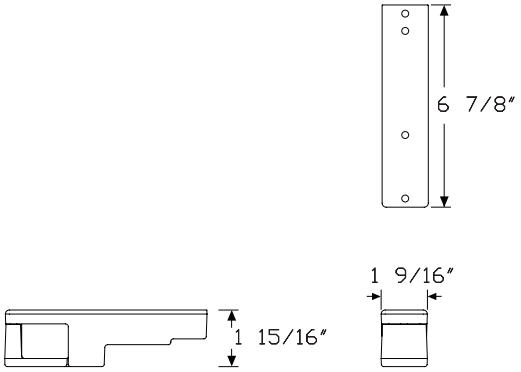

Specification Information

Step 1.

GNSG.	$52

Suspended End Cubby Hardware Kit LSH.

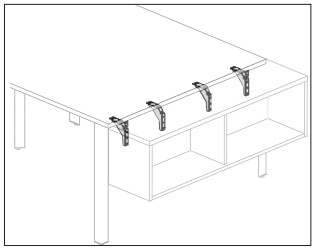

Product Information

Description

This hardware kit attaches a suspended end cubby to the outside of a Layout Studio® double desk end leg.

Notes

Order suspended end cubby (L2ES.B) separately.

See Tu Wood Planning Guide for specific guidelines.

Dimensions

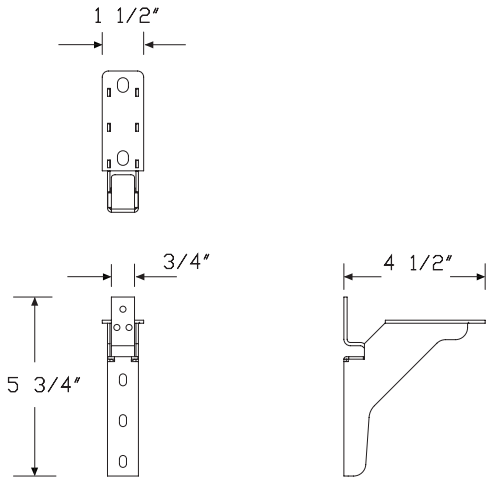

Specification Information

Step 1.

LSH. A

Step 2. Application

B	suspended below surface A	

Prices for Steps 1-2.

LSH.	**B**	$491

Step 3. Finish

Metallic Paint

613	silver (CP) A	+$0
SNA	satin aluminum A	+$10
SNB	satin bronze A	+$10
SNC	satin carbon A	+$10

Sand Texture Paint

91	white (CP) A	+$0
BK	black A	+$0
G1	graphite (CP) A	+$0
UBK	ultra black (CP) A	+$0

Smooth Paint

98	studio white (CP) A	+$0

Stanchion Kit LSS.

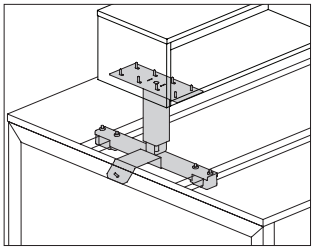

Product Information

Description

These stanchions elevate and support the laminate work surface cubby, individual cubby, and shared cubby. The shared mount kit has 1 shared stanchion, and the other kits have 2 stanchions. Attachment hardware included.

Notes

Specify cubby separately.

For use with laminate work surface cubby (L2WC.), specify work surface mounted stanchion (LSS.WS).

For use with individual cubby (L2EC.), specify credenza/work surface mounted stanchion (LSS.CD). The tall outbound stanchion has 1″ of adjustability.

The inbound stanchion included in each kit attaches to the underside of the work surface.

For use in Layout Studio® non-rail applications, specify end mount kit (LSS.SE) and the correct number of shared mount kits (LSS.SM) for the number of cubbies to be used.

See Tu Wood Planning Guide for specific guidelines.

Dimensions

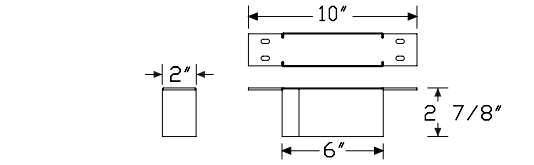

worksurface stanchion

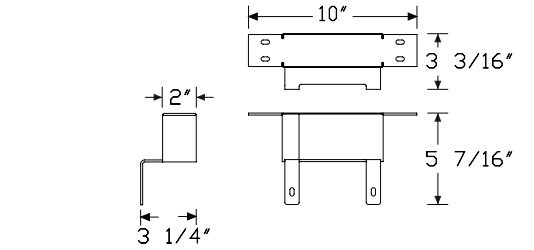

attached stanchion

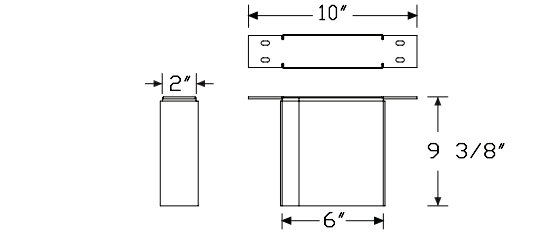

credenza stanchion

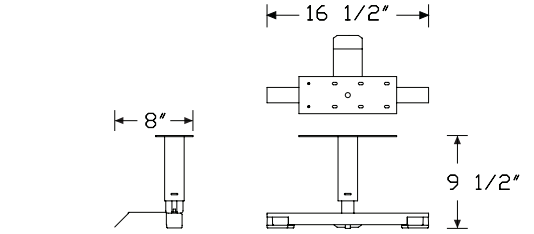

end mount for layout studio

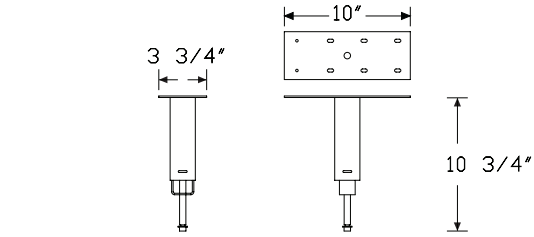

shared mount for layout studio

Specification Information

Step 1.

LSS.

Step 2. Width

SM	shared mount for layout studio
WS	work surface mounted
CD	credenza/work surface mounted
SE	end mount for layout studio

Prices for Steps 1-2.

LSS.	**SM**	$433
	WS	$486
	CD	$581
	SE	$978

Step 3. Finish

Metallic Paint

613	silver (CP)	+$0
SNA	satin aluminum	+$10
SNB	satin bronze	+$10
SNC	satin carbon	+$10

Sand Texture Paint

91	white (CP)	+$0
BK	black	+$0
G1	graphite (CP)	+$0
UBK	ultra black (CP)	+$0

Storage Attachment Kit, End Leg L2SL.

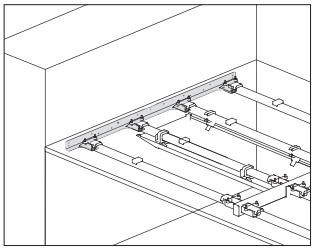

Product Information

Description

This hardware kit attaches Layout Studio® beams to a Tu® Wood end-of-run storage unit to allow the storage unit to replace a Layout Studio double end leg. The kit is available for use with a 48″-wide or a 60″-wide freestanding storage case. Finish is cool grey neutral.

Notes

To replace a Layout Studio double leg with a storage unit, order a Tu Wood end-of-run cabinet (L2ER.) separately.

Specify storage base option to match base option on storage unit.

See Tu Wood Planning Guide for specific guidelines.

Dimensions

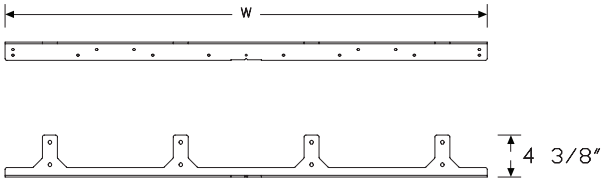

Specification Information

Step 1.

L2SL. A

Step 2. Depth

48	48″ double end leg A
60	60″ double end leg A

Prices for Steps 1-2.

L2SL.	**48**	$464
	60	$499

Step 3. Storage Base Option

1	base A	+$0
3	base with fronts to floor A	+$0
5	foot A	+$0
9	c-foot A	+$0

Index by Product Name

Layout Studio®	
Access Door	page(s) 26, 103
Beams, 120°	102
Beams, Meeting End	21, 101
Beams, Rectangular Primary	20, 98
Beams, Rectangular Return	99
Block Connector, 4-Circuit	30, 107
Cable Management Clips, Double Tray	40, 116
Closed Leg, Desk End, Double	16, 94
Closed Leg, Desk End, Single	92
Closed Leg, Desk End, Single, Performance Rail	14
Closed Leg, Standing End, Double	18, 96
Corner Post	160
Data Module	39, 115
Duplex Receptacle, 4-Circuit	33, 110
End Cap, Performance Rail	23
End Cap, Performance Rail, Package	24
Engage Leg, Asymmetrical Desk End, Double	8, 85
Engage Leg, Back-to-Back Bracing Leg	88
Engage Leg, Back-to-Back Bracing Leg, Performance Rail	10
Engage Leg, Corner Leg	87
Engage Leg, Desk End, Double	6, 83
Engage Leg, Desk End, Double, Meeting End	9, 86
Engage Leg, Desk End, Single	82
Engage Leg, Desk End, Single, Performance Rail	5
Engage Leg, Intermediate Desk	84
Engage Leg, Intermediate Desk, Performance Rail	7
Engage Leg, Intermediate Standing	12, 90
Engage Leg, Standing Back-to-Back Bracing Leg	13, 91
Engage Leg, Standing End, Double	11, 89
Flat Edge Screen, Delineation	167
Flat Edge Screen, Delineation, Performance Rail	66
Flat Edge Screen, Desk Up	139
Flat Edge Screen, Desk Up, Performance Rail	53
Flat Edge Screen, End of Run	64
Flat Edge Screen, Modesty	150
Floor Power Entry Cover	41, 117
Framed Screen, Delineation	156
Framed Screen, Desk Up	144
Frameless Glass Screen Filler Kit	161
Gallery Panel, Leg-Attached	60, 162
Generic Beam Clamp	168
Glass Screen, Desk Up, Frameless	146
Glass Screen, Desk Up, Frameless, Performance Rail	54
Hardware Pack, Fixed Surfaces	49, 134
Hardware Pack, Quick Release Attachment	50, 135
Hardware Pack - Sliding - Rectangular Primary	51, 136
Harness Cover	32, 109
Individual Cubby	69
Junction Block, 4-Circuit	28, 105
Junction Block Attachment Bracket	104
Junction Block Attachment Bracket, Performance Rail	27
Junction Block-to-Junction Block Jumper	31, 108
Layout Studio® Laminate Screen, Desk Up	141
Layout Studio® Laminate Screen, Desk Up, Performance Rail	56
Layout Studio® Laminate Screen, Modesty	152
Meeting End, Rectangular	47, 129
Pari Screen, Delineation	166
Pari Screen, Delineation, Performance Rail	65
Pari Screen, Desk Up	137
Pari Screen, Desk Up, Performance Rail	52
Pari Screen, End of Run	63, 165
Pari Screen, Modesty	148
Performance Rail	22
Personal Side Screen, Delineation	59, 155
Power Entry, 4-Circuit	34, 111
Power Entry, 4-Circuit, New York City	35, 112
Primary Work Surface, 120°	131
Primary Work Surface, Rectangular	119
Primary Worksurface, Rectangular, Performance Rail	43
Project Table, Rectangular	127
Return Leg Beam Replacement Kit	100
Return Work Surface, Rectangular	125
Screen Bracket, Delineation, Pari or Flat Edge	67
Screen Brackets	158
Screen Connectors	159
Screen - Modesty - Metal, Performance Rail-Attached	58
Shared Cubby	71
Shared Cubby Insert	81
Stanchion Kit	78, 170
Stanchion Kit, Performance Rail	75
Storage Attachment Kit, End Leg	80, 172
Suspended End Cubby	73
Suspended End Cubby Hardware Kit	77, 169
Trim Strip, Performance Rail Center Channel	25
Umbilical Riser, Fixed Height	42, 118
Wire Management Tray	37, 113
Wire Management Tray, Single, Performance Rail	36

GN1351	Power Entry, 4-Circuit	page(s) 34, 111
GN1352	Power Entry, 4-Circuit, New York City	35, 112
GN1353	Junction Block-to-Junction Block Jumper	31, 108
GN1354	Block Connector, 4-Circuit	30, 107
GN1355	Duplex Receptacle, 4-Circuit	33, 110
GN1358	Junction Block, 4-Circuit	28, 105
GNBA.	Beams, Rectangular Return	99
GNBB.		
GNBD.	Return Leg Beam Replacement Kit	100
GNBF.	Beams, 120°	102
GNBG.		
GNBM.	Beams, Meeting End	21, 101
GNBR.	Beams, Rectangular Primary	20, 98
GNCFEL	Closed Leg, Desk End, Single	92
GNCFEL	Closed Leg, Desk End, Single, Performance Rail	14
GNCFEN	Closed Leg, Desk End, Double	16, 94
GNCFER	Closed Leg, Desk End, Single	92
GNCFER	Closed Leg, Desk End, Single, Performance Rail	14
GNCSEN	Closed Leg, Standing End, Double	18, 96
GNHDA.	Hardware Pack, Quick Release Attachment	50, 135
GNHDF.	Hardware Pack, Fixed Surfaces	49, 134
GNHOF.		
GNHPA.	Hardware Pack, Quick Release Attachment	50, 135
GNHPF.	Hardware Pack, Fixed Surfaces	49, 134
GNHRS.	Hardware Pack - Sliding - Rectangular Primary	51, 136
GNHSF.	Hardware Pack, Fixed Surfaces	49, 134
GNLFAL	Engage Leg, Asymmetrical Desk End, Double	8, 85
GNLFAR		
GNLFBN	Engage Leg, Back-to-Back Bracing Leg	88
GNLFBN	Engage Leg, Back-to-Back Bracing Leg, Performance Rail	10
GNLFCN	Engage Leg, Corner Leg	87
GNLFEL	Engage Leg, Desk End, Single	82
GNLFEL	Engage Leg, Desk End, Single, Performance Rail	5
GNLFEN	Engage Leg, Desk End, Double	6, 83
GNLFER	Engage Leg, Desk End, Single	82
GNLFER	Engage Leg, Desk End, Single, Performance Rail	5
GNLFPN	Engage Leg, Desk End, Double, Meeting End	9, 86
GNLFSN	Engage Leg, Intermediate Desk	84
GNLFSN	Engage Leg, Intermediate Desk, Performance Rail	7
GNLSBN	Engage Leg, Standing Back-to-Back Bracing Leg	13, 91
GNLSEN	Engage Leg, Standing End, Double	11, 89
GNLSSN	Engage Leg, Intermediate Standing	12, 90
GNMRF.	Screen - Modesty - Metal, Performance Rail-Attached	58
GNPA.	Junction Block Attachment Bracket	104
GNPA.	Junction Block Attachment Bracket, Performance Rail	27
GNPC.	Floor Power Entry Cover	41, 117
GNPD.	Access Door	26, 103
GNPH.	Harness Cover	32, 109
GNRC.	End Cap, Performance Rail	23
GNRC.	End Cap, Performance Rail, Package	24
GNRD.	Performance Rail	22
GNRS.		
GNRT.	Trim Strip, Performance Rail Center Channel	25
GNSA.	Screen Brackets	158
GNSB.		
GNSC.		
GNSD.	Screen Bracket, Delineation, Pari or Flat Edge	67
GNSDL.	Layout Studio® Laminate Screen, Desk Up	141
GNSDNT	Framed Screen, Desk Up	144
GNSDRG	Glass Screen, Desk Up, Frameless, Performance Rail	54
GNSDRL	Layout Studio® Laminate Screen, Desk Up, Performance Rail	56
GNSDRS	Flat Edge Screen, Desk Up, Performance Rail	53
GNSDRT	Pari Screen, Desk Up, Performance Rail	52
GNSDRU	Layout Studio® Laminate Screen, Desk Up, Performance Rail	56
GNSDU.	Layout Studio® Laminate Screen, Desk Up	141
GNSDXG	Glass Screen, Desk Up, Frameless	146
GNSDXS	Flat Edge Screen, Desk Up	139
GNSDXT	Pari Screen, Desk Up	137
GNSE.	Screen Connectors	159
GNSFXS	Flat Edge Screen, End of Run	64
GNSFXT	Pari Screen, End of Run	63, 165
GNSG.	Generic Beam Clamp	168
GNSH.	Screen Connectors	159
GNSJ.		
GNSML.	Layout Studio® Laminate Screen, Modesty	152
GNSMU.		
GNSMXS	Flat Edge Screen, Modesty	150
GNSMXT	Pari Screen, Modesty	148
GNSND.	Corner Post	160
GNSNM.		
GNSPNT	Framed Screen, Delineation	156
GNSPXP	Pari Screen, Delineation	166
GNSPXP	Pari Screen, Delineation, Performance Rail	65
GNSPXS	Flat Edge Screen, Delineation	167
GNSPXS	Flat Edge Screen, Delineation, Performance Rail	66
GNSPXT	Personal Side Screen, Delineation	59, 155
GNSTA.	Gallery Panel, Leg-Attached	60, 162
GNSX.	Frameless Glass Screen Filler Kit	161
GNTAD.	Primary Work Surface, 120°	131
GNTAF.		
GNTAG.		
GNTAN.		
GNTDG.	Meeting End, Rectangular	47, 129
GNTDN.		

GNTPA.	Project Table, Rectangular	127
GNTPN.		
GNTRD.	Primary Work Surface, Rectangular	119
GNTRF.		
GNTRG.		
GNTRN.		
GNTRR.	Primary Worksurface, Rectangular, Performance Rail	43
GNTSN.	Return Work Surface, Rectangular	125
GNWC.	Cable Management Clips, Double Tray	40, 116
GNWD.	Wire Management Tray	37, 113
GNWF.	Umbilical Riser, Fixed Height	42, 118
GNWG.		
GNWM.	Data Module	39, 115
GNWS.	Wire Management Tray	37, 113
GNWS.	Wire Management Tray, Single, Performance Rail	36
L2EC.	Individual Cubby	69
L2ES.	Suspended End Cubby	73
L2EY.	Shared Cubby	71
L2SL.	Storage Attachment Kit, End Leg	80, 172
L2SS.	Stanchion Kit, Performance Rail	75
LLCM.	Shared Cubby Insert	81
LSH.	Suspended End Cubby Hardware Kit	77, 169
LSS.	Stanchion Kit	78, 170

20-Day or Less/Assigned Lead-Time Order Information

20-Day or Less and Assigned Lead-Time Programs

20-day or less and assigned lead-time products are designed for established Herman Miller dealers with pre-approved credit.

Products are distributed from multiple manufacturing facilities across the United States. All products and options not designated by an Assigned Lead-Time icon A will ship in 20 business days or less after being acknowledged by Herman Miller. Products and options designated by an A are on the assigned lead-time program and will ship in 20 days, less than 20 days, or more than 20 days from order acknowledgement.

Ordering Procedure

Please place orders through Order Manager. If this is not available to you, place orders through mail or fax. Verbal purchase orders will not be accepted.

Order Entry fax number for Meridian®
Filing and Storage: (616) 846 9236.
Order Entry fax number for all other products:
(616) 654 3085.

For more information, contact your Customer Care representative at: (866) 854 3048 ext 3400.

Shipments and Delivery

Per Herman Miller Terms and Conditions.

Changes and Cancellation

Per Herman Miller Terms and Conditions.

Stain-to-Match Program

Program Overview

The Stain-to-Match program gives you the option of using veneer finishes that are not listed in the standard offering. The program allows Herman Miller to match a customer's existing recut or natural veneer, or create a new finish that is unique to an installation.

Specific information on approval, ordering, pricing, and warranty for the Stain-to-Match program is listed below. Questions and requests for assistance may be directed to Herman Miller Options at:

(800) 654 3910

Stain-to-Match Process

1. Fill out the Options Stain-to-Match Request Form and send along with a color sample (2" x 3" minimum) to the Herman Miller Options Applications Team at the address provided on the form. The form can be found on Omni.
2. Within 7-10 working days, Herman Miller Options will send a sample of the color-matched stain on Herman Miller veneer to the requester for the customer's signed approval.
3. If the sample meets the customer's approval, sign the reverse side of the sample, scan and email the approval to:
   options@hermanmiller.com.
4. After the stain has been approved, a formal quotation with special number and pricing can be provided, or the product can be specified through the Vary Easy program, if available. Work with the Options team on final product needs and how to specify.
5. A purchase order can then be placed.

Stain-to-Match Warranty

Herman Miller warrants its products to be free from defects in craftsmanship from the date of delivery for the applicable warranty period. Herman Miller is responsible for the physical properties of the veneers available through the Stain-to-Match program, which include:

STA: Stain-to-Match on Recut Ash
STC: Stain-to-Match on Cherry
STD: Stain-to-Match on Oak
STK: Stain-to-Match on Reltech Anigre (Geiger)
STP: Stain-to-Match on Maple
STU: Stain-to-Match on Walnut (Geiger)

See your specification tool for product specific finish offering limitations.

Customer's Own Material Order Information — Workspaces

Customer's Own Material

Program Overview

The Customer's Own Material (COM) program gives you the option of using textiles other than those listed. Herman Miller will test textiles for application to Herman Miller products and will process orders for those with approved COM textiles only. COM textiles are on assigned lead times.

Omni lists an overview of fabrics that have been tested and indicates whether or not they were approved for application to Herman Miller products.

Specific information on the terms and conditions, testing, approval, and ordering process for COM is listed below. Questions about the COM program and requests for assistance may be directed to your COM representative at:
(616) 654 3400
(866) 854 3048 ext 6543400

Customer's Own Material Warranty

Herman Miller does not warrant COM textiles. COM textiles are tested for application only; they are not tested for performance. The Herman Miller warranty does apply to the underlying products.

Suppliers of COM textiles are responsible for color consistency within commercial tolerances, UV stability, and resistance to soiling and perspiration.

Customer's Own Material Pricing

COM is a Category 1 fabric. There are no application charges for COM fabrics.

Ordering and payment for COM textile yardage are the responsibility of the customer and the textile supplier.

If desired, Herman Miller will purchase COM textiles directly from Maharam, Camira, C.F. Stinson, Guilford of Maine, Luna Textiles, Momentum Textiles and Ultrafabrics to simplify ordering and shipment. For this service, refer to the Supplier Connection program in Omni.

Application Note

Herman Miller does not guarantee that Customer's Own Material (COM) fabric patterns will align across panels/tiles or from one screen to the next. We also do not guarantee that COM fabric designs will be positioned consistently in the same location across several panels, tiles, or screens.

Textile Approval

1. Select a COM textile and a Herman Miller product.
2. If your textile does not show as tested in Omni, submit a request. You will be required to select a specific color of the textile and feature of the product to test, i.e., seat, back, etc.
3. Herman Miller will notify you of approval or disapproval within 4 days from receipt of the test yardage.

Ordering Products with COM

1. Refer to the specific products to determine the yardage required for COM textiles.
   Note: Yardage requirements are based on nondirectional, 54"-wide textiles. 66"-wide textiles are needed for application on 60"-wide products. Additional yardage may be needed due to the unique characteristics of a textile.
2. Obtain the COM ID# in Omni. If the color you are ordering does not have a COM ID# assigned, click "Create ID".
3. Enter your order on Order Manager in Omni.
4. Upon receipt of your purchase order, Herman Miller will send you a PO acknowledgment.
5. Arrangements must be made for the textiles to be shipped from the supplier to Herman Miller for application to the Herman Miller products. Textiles must be tagged with the assigned identification number and the roll yardage quantity. See Omni for shipping procedures and current shipping addresses or contact a COM representative at (616) 654 3400 or (866) 854 3048 ext 6543400.

   Products will be scheduled for production when COM textiles are received at Herman Miller. Standard lead times in effect at that time will apply.

   Note: If textiles are to be purchased directly by Herman Miller through the Supplier Connection program, Herman Miller will handle the ordering and shipping process and will schedule your order for production upon receipt of your purchase order (dependent on textile availability). Refer to the Supplier Connection program for more information.

Supplier Connection

Program Overview

The Supplier Connection program is a service offered by Herman Miller to purchase approved COM textiles directly from Maharam, Camira, C.F. Stinson, Guilford of Maine, Luna Textiles, Momentum Textiles and Ultrafabrics. When you select a textile through this program, Herman Miller will facilitate the ordering, scheduling, and shipment of the textile directly with the supplier.

Suppliers included in the Supplier Connection program keep an active inventory of textiles that are pre-approved for application to Herman Miller products. Pre-approval applies only to the suitability of a textile for manufacturing and application to a Herman Miller product. Omni provides an overview of fabrics that have been tested and indicates whether or not they were approved for application to Herman Miller products.

Specific information on the terms and conditions, testing, approval, and ordering process for the Supplier Connection program is listed below. Questions and requests for assistance may be directed to your COM representative at:
(616) 654 3400
(866) 854 3048 ext 6543400

Supplier Connection Warranty

Textiles purchased by Herman Miller through the Supplier Connection program are COM and are not warranted by Herman Miller. COM textiles are tested for application only; they are not tested for performance. The Herman Miller warranty does apply to the underlying products.

Suppliers of COM textiles are responsible for color consistency within commercial tolerances, UV stability, and resistance to soiling and perspiration.

Supplier Connection Pricing

Textiles purchased by Herman Miller through the Supplier Connection program are COM. COM is a Category 1 fabric. There are no application charges for COM fabrics.

Payment for textiles purchased by Herman Miller through the Supplier Connection program is the responsibility of the customer or dealer. Herman Miller will invoice the order at a total product cost based on the supplier's price published at the time of the order.

Textile Approval

1. Select a COM textile and a Herman Miller product.
2. If your textile does not show as tested in Omni, submit a request. You will be required to select a specific color of the textile and feature of the product to test, i.e., seat, back, etc.
3. Herman Miller will notify you of approval or disapproval within 4 days from receipt of the test yardage.

Ordering Products with Supplier Connection COM

1. Identify and include the following information on your purchase order:
   - Product number and option
   - Herman Miller's COM identification number
2. Enter your order on Order Manager in Omni.
3. Upon receipt of the purchase order, Herman Miller will process your order and send you a PO acknowledgment. Herman Miller will determine the yardage required to produce your product and will order and schedule for delivery the required textile. Standard lead times in effect at the time the textile is allocated at the supplier will apply to products ordered through this program.

Textiles Application Chart — Workspaces

• *Available*

A *Assigned lead-time textile.*

A *Maharam textiles are on assigned lead times.*

See page 2 for exception notes.

		Action Office® Panels/Connectors	Action Office B-Style Tackboards	Action Office/Ethospace E-Style Storage	Ethospace Tiles/Connectors	Ethospace/Canvas Office Landscape® Privacy Doors	Canvas Tiles/Extended Width Tiles/Channel Tiles	Canvas B-/E-Style Storage	Canvas Tackboards	Canvas Metal Desk Hutch Back Panel	Canvas Vista™ Movable Insert and Display Unit	OE1 Boundary Agile Wall Tile	OE1 Boundary Project Board and Screens	OE1 Floating Screen	OE1 Nook Liner/Felt Screen Liner/Storage Trolley Liner	Overlay™ Performance Wall Cladding	Pari™ Screens/Flat Edge Screens/Channel Screens	Passport Work Table Screen	Renew™ Link Screens	Ambit™ Workspace Solutions Screen	Ambit Workspace Solutions Metal Screen Liner	Exclave® Tackable Boards and Stowage Tackable Backdrop	Exclave Video-Friendly Tackable Boards & Stowage Tackable Backdrop	Personal Side Screen	Tu® Wood Storage Cubby Tackboard	Seating
Price Category 1																										
COM	Customer's Own Material A	1	1	1	1	1	1	1	1	1	1	1	1			1	1		1	1		1		1	1	1
2V_ _	Chain	•	•	•	•	•	22	•	•	•	•		•			•	•		•						•	
8T_ _	Crossing (85_ _)	2	2	•	•	•	•	2	•	•		•	•			•	•		•	•		•	8		•	18
3DE_ _	Dex	6	2	•	•	•	•	2	•	•		•	•			•	•		•	•		•		•	•	•
2I_ _	Grasscloth	•	•	•	•	•	•	•	•	•	•		•			•	•		•	•				•	•	
1MN_ _	Monologue	2	2	•	•	•	•	2	•	•	•		•			•	•		•	•				•	•	•
5T_ _	Resonance	•	•	•	•	•	•	•	•	•	•					•								•	•	
4SC_ _	Scatter	2	2				•		•	•	•	•	•			•	•		•	•		•		•	•	•
3DN_ _	Scribe	•	•	•	•	•	•	•	•	•	•	•	•			•	•		•	•		•		•	•	•
22F_ _	Slant	6	•		•	•	•		•	•	•					•									•	
235_ _	Tailored	•		•	•	•	8	•	•	•	•					•									•	•
1WS_ _	Whisper	2	2	•	•	•	•	2	•	•	•	•	•			•	•		•	•		•		•	•	•
Price Category 2																										
3AR_ _	Aristo	2	2	•	•	•	•	2	•	•	•	•	•			•	•		•	•		•		•	•	•
51_ _	Cord	•	•	•	•	•	•	•	•	•	•					•									•	
92_ _	Crepe	2	•	•	•	•	•	•	•	•	•	•				•	•			•		•	8	•		•
3EP_ _	Epic	2	2	•	•	•	•	2	•	•		•	•			•	•		•	•		•		•	•	•
3DP_ _	Hint	•	•	•	•	•	•		•	•	•	•				•	•		•	•		•		•	•	•
4N_ _	Horizon	2	2	•	•	•	•	•	•	•	•					•	•			•				•	•	
1HA_ _	Medley	2	2	•	•	•	•	•	•	•	•	•	•	•		•	•		•	•		•	8	•		•
4ME_ _	Mellow	2	2	•	•	•	•	2	•	•	•	•	•			•	•		•	•		•		•	•	•
ZMA_ _	Metaphor - Maharam A	2	2	2	2	•	•	2	•		•	•				•	•					•				•
8I1_ _	Muse - Maharam A	2	2	2	•		•	2	•		•	•	•			•	•		•	•		•		•		•
3SL_ _	Sequel			2				2																		•
4TE_ _	Terra	2	2	•	•	•	•	2	•	•	•	•	•			•	•		•	•		•		•	•	•
3TW_ _	Twine	•	•	•	21	•	•	•	•	•	•	•	•			•	•		•	•		•		•	•	
8R_ _	Twist (5S_ _)	5	2	•	•	•	•	2	•	•	•		•			•	•		•	•				•	•	18
Price Category 3																										
43Z_ _	Fractal	•	•	•	•	•	•	•	•	•	•	•	•			•	•		•	•		•		•	•	•
47_ _	Ground Cloth®	•	•	•	•	•	•	•	•	•	•	•	•			•	•		•	•		•	8	•	•	
ZM2_ _	Meld - Maharam A *	2	2	•	•	•	•	•	•	•	•	•	•			•	•		•	•		•		•		•
4GE_ _	Parcel	•	•	•	•	•	•	•	•	•	•	•	•			•	•		•	•		•		•	•	•
8W_ _	Strands	•	•	•	•	•	•	•	•	•			•			•	•		•	•				•	•	
Price Category 4																										
3DM_ _	Daydream	2	2	•			•	2	•	•	•	•	•			•	•		•	•		•		•	•	•
1HS_ _	Hush	•	•	•	•	•	•	•	•	•	•	•			•	•		•	•		•	•		•	•	
Price Category 5																										
3CY_ _	Cozy													•												
14A_ _	Hopsak	2	2	•	•		•	2	•	•	•	•				•						•			•	•
40G_ _	Method - Maharam A	2	2	2	2	•	•	2	•	•	•	•	•			•	•		•	•		•		•		•
ZNC_ _	Nico - Maharam A	2	2	2	•	•	•	2	•	•	•	•	•			•	•		•	•		•		•		•
Price Category 6-7																										
No fabrics available at this time.																										

continued on next page

Textiles Application Chart — Workspaces *continued*

• *Available*

A *Assigned lead-time textile.*

A *Maharam textiles are on assigned lead times.*

See page 2 for exception notes.

	Action Office® Panels/Connectors	Action Office B-Style Tackboards	Action Office/Ethospace E-Style Storage	Ethospace Tiles/Connectors	Ethospace/Canvas Office Landscape® Privacy Doors	Canvas Tiles/Extended Width Tiles/Channel Tiles	Canvas B-/E-Style Storage	Canvas Tackboards	Canvas Metal Desk Hutch Back Panel	Canvas Vista™ Movable Insert and Display Unit	OE1 Boundary Agile Wall Tile	OE1 Boundary Project Board and Screens	OE1 Floating Screen	OE1 Nook Liner/Felt Screen Liner/Storage Trolley Liner	Overlay™ Performance Wall Cladding	Pari™ Screens/Flat Edge Screens/Channel Screens	Passport Work Table Screen	Renew™ Link Screens	Ambit™ Workspace Solutions Screen	Ambit Workspace Solutions Metal Screen Liner	Exclave® Tackable Boards and Stowage Tackable Backdrop	Exclave Video-Friendly Tackable Boards & Stowage Tackable Backdrop	Personal Side Screen	Tu® Wood Storge Cubby Tackboard	Seating
Price Category 8																									
1QG_ _Breeze - Maharam A													•												
Price Category 9																									
No fabrics available at this time.																									
Price Category A																									
No fabrics available at this time.																									
Price Category B																									
VM_ _ Medium - Maharam A		2				•	20	•	•	•					•										•
TI_ _ Messenger - Maharam A *		2	•	12	•	•	2	•	•	•					•	•			•						•
Price Category C																									
Z27_ _Manner - Maharam A	2	2	2	•		•	2	•	•	•					•	•			•						•
Z3_ _ Metric - Maharam A	2	2			•	•		•	•	•					•	•			•						•
Price Category D																									
ZMD_ _Mode - Maharam A	2																				•				•
ZS3_ _Spiral - Maharam A	•	•	•	•		•	•	•	•	•					•										
Price Category E																									
ZF3_ _ Flock - Maharam A												•			•				•						
TT_ _ Parallel - Maharam A	7	•		•	•	•	16	•	•	•					•										
Price Category F																									
8EX_ _ Emit - Maharam A	2	2	2	•	•	•	2	•	•																
Price Category G-Z																									
No fabrics available at this time.																									

Application Note: Herman Miller cannot guarantee material/pattern alignment in adjacent products. For example, a fabric's pattern may not align from one screen to the next, or from one panel to the next.

** Available in select colors on 20-day lead-time. Refer to "Maharam Colors - Workspaces" for 20-day colors.*

1 *Refer to price book appendices and Omni for COM information.*
2 *Available on all products except 54" and 60" wide.*
3 *Not available on AO partial-glazed panels.*
4 *Not available on Action Office (AO®) acoustical panels.*
5 *(8R_ _), (8T_ _), (85_ _), and (5S_ _) not available on AO acoustical panels and not available on 54"- or 60"-wide products.*
6 *Not available on Action Office (AO®) connectors, cable management, and spacers.*
7 *Not available on AO acoustical panels; not available on AO2 cable management panel face.*
8 *Available in select colors. See the "Proprietary Textile Colors — Workspaces" appendix.*
12 *Not available on Ethospace tackable tiles.*
16 *Not available on Canvas E-style storage.*
18 *Available on seating products in select colors. See the "Proprietary Textile Colors — Seating" appendix.*
20 *Not available on Canvas E-style storage or 60"-wide B-style storage.*
21 *Not available on Ethospace connectors and cable management tiles.*
22 *Not available as railroaded application option for* Chain *(2V00) on Canvas Extended Width Tiles.*

Price Category 1

Customer's Own Material

See Order Information in Appendices. Assigned lead-time textile. A

8Z Pellicle®

Seating
For New Aeron® Chairs
56% elastomeric
44% polyester

23101	Mineral
23102	Carbon
23103	Graphite

AireWeave™ 2

Seating
For Mirra® 2 Chairs
67% elastomeric
33% antimony-free polyester

1A701	Alpine
1A702	Slate Grey
1A703	Graphite
1A704	Lime Green
1A705	Cappuccino
1A706	Urban Orange
1A707	Dark Turquoise
1A708	Twilight

Chain

Workspaces
66" wide
100% recycled polyester
with 12% ocean bound plastic

2V01	Pearl
2V02	Oyster
2V03	Wheat
2V04	Linen
2V05	Wicker
2V06	Bamboo
2V07	Sage
2V08	Spring Wood
2V09	Iceberg

Crossing

Seating/Workspaces
54" wide
86% antimony-free polyester
14% polyester

8T03	Wicker *
8T04	Porcelain *
8T05	Warm Grey *
8T10	Tomato
8T17	Cerulean
8T18	Indigo
8T19	Shale *
8T22	Tin *
8T23	Graphite
8T24	Black

Crossing

Workspaces
For workspaces products only.
54" wide
86% antimony-free polyester
14% polyester

8501	Ivory *
8502	Oyster *

* Colors available on Exclave® Video-friendly Tackable Boards and Stowage Tackable Backdrop

Dex

Ancillary/Seating/Workspaces
54" wide
67% recycled polyester
33% polyester

3DE01	Frost
3DE02	Silver Pine
3DE03	Stone
3DE04	Shale
3DE05	Charcoal
3DE06	Gossamer
3DE07	Pine

Duo

Seating
For Lino™ Chairs
52% polyester
48% elastomeric

4RM01	Mineral
4RM02	Poppy
4RM03	Green Leaf
4RM04	Jade
4RM05	Shadow
4RM06	Graphite

Flexnet™

Seating
For Caper® Chairs
69% elastomeric
31% polyester

6V01	Black
6V02	Silver Grey

Grasscloth

Workspaces
66" wide
100% recycled polyester
with 11% ocean bound plastic

2I01	Silver Birch
2I02	Pampas
2I03	Sedge
2I07	Lea
2I08	Taro
2I09	Steam Grey
2I13	Gravel

Intercept

Seating
For Cosm™ Chairs
60% elastomeric
40% polyester

84501	Graphite
84502	Carbon
84503	Mineral
84504	Nightfall
84505	Glacier
84506	Canyon

Interweave 2

Seating
For Verus™ Chairs
65% elastomeric
35% polyester

36501	Iceberg
36502	Poppy
36503	Beachglass
36504	Blue Grotto
36505	Slate
36506	Shale

Lyris 2™

Seating
For Setu® Chairs
74% elastomeric
26% polyester

4W21	Alpine
4W23	Chartreuse
4W25	Berry Blue
4W26	Slate Grey
4W28	Chino
4W31	Graphite

Monologue

Ancillary/Seating/Workspaces
54" wide
56% recycled polyester
44% polyester

1MN01	Linen
1MN02	Alabaster
1MN04	Folkstone
1MN05	Silver Pine
1MN06	Slate
1MN07	Seed
1MN09	Persimmon
1MN11	Meadow
1MN12	Blue Sky
1MN13	Blue Spruce
1MN14	Deep Sea

Price category 1 continued on next page

- Maharam textiles are on assigned lead times A.
- Fabric numbers are listed as Herman Miller fabric number/Maharam fabric number.

Price Category 1
continued

Resonance
Workspaces
66” wide
100% polyester

5T04	Greige
5T05	Porcelain
5T06	Alabaster
5T15	Iris
5T28	Sugar
5T47	Tobacco
5T54	Saltbush
5T57	Seed
5T58	Sepia
5T60	Iceberg
5T65	Red
5T67	Boysenberry
5T68	Pistachio
5T69	Green Apple
5T71	Jade
5T72	Blue Green
5T74	Twilight

Ripple 3D Knit
Seating
Available only on Zeph® Chairs.
knit to size
99% recycled polyester
1% lycra

5H201	Black
5H202	Carbon
5H203	Alpine
5H204	Silt
5H205	Tea Rose
5H206	Cocoa
5H207	Persimmon
5H208	Blaze
5H209	Cayenne
5H210	Falcon
5H211	Mustard Seed
5H212	Patina
5H213	Olive
5H214	Moss
5H215	Aloe
5H216	Glacier
5H217	Ultramarine
5H218	Nightfall
5H219	Bluebell
5H220	Boysenberry
5H221	Nightfall/Bluebell
5H222	Patina/Alpine
5H223	Cayenne/Glacier
5H224	Tea Rose/Olive
5H225	Silt/Blaze

Scatter
Ancillary/Seating/Workspaces
54” wide
100% recycled polyester,
with 26% ocean bound plastic

4SC01	Alpine
4SC02	Fog
4SC03	Shale
4SC04	Persimmon
4SC07	Olive
4SC08	Glacier
4SC09	Blue Sky
4SC10	Lagoon
4SC11	Slate Grey
4SC12	Blue Black

Scribe
Seating/Workspaces
54” wide
100% recycled polyester
with 53% ocean bound plastic

3DN01	Spring Wood
3DN02	Poplar
3DN03	Pewter
3DN04	Deep Sea
3DN05	Fir
3DN06	Nutmeg

Slant
Workspaces
66” wide
51% polyester
49% recycled polyester

22F04	Pesto
22F06	Neptune
22F07	Blueberry
22F10	Pumpkin
22F12	Silver Birch
22F13	Bluestone
22F15	Shale

Splash 3D Knit
Seating
Available only on Zeph® Chairs.
knit to size
98% recycled polyester
2% lycra

5H101	Black
5H102	Carbon
5H103	Alpine
5H104	Silt
5H105	Tea Rose
5H106	Cocoa
5H107	Persimmon
5H108	Blaze
5H109	Cayenne
5H110	Falcon
5H111	Mustard Seed
5H112	Patina
5H113	Olive
5H114	Moss
5H115	Aloe
5H116	Glacier
5H117	Ultramarine
5H118	Nightfall
5H119	Bluebell
5H120	Boysenberry

Stretch Knit
Seating
Assigned lead-time textile. A
Available only on Sayl®
Suspension Back Work Chairs
97% polyester, 3% spandex

3DK01	Fog
3DK02	Slate Grey
3DK03	Java
3DK04	Black
3DK05	Red
3DK06	Green Apple
3DK07	Berry Blue

Price category 1 continued on next page

- Maharam textiles are on assigned lead times A.
- Fabric numbers are listed as Herman Miller fabric number/Maharam fabric number.

Price Category 1
continued

Tailored	
Ancillary/Seating/Workspaces	
54” wide	
56% polyester	
44% recycled polyester	
23501	Studio White * **
23502	Sugar *
23503	Tomato
23506	Chive
23508	Cobalt
23509	Cadet
23510	Fog
23511	Graphite
23512	Black
23513	Coffee

* Colors not available on Plex™ Lounge Furniture.
** Color not available on Canvas Tiles.

Tuck 3D Knit	
Seating	
Available only on Fuld Nesting Chairs.	
knit to size	
56% polyester	
44% recycled polyester	
9NK01	Alpine
9NK02	Carbon
9NK03	Nightfall
9NK04	Olive
9NK05	Cocoa
9NK06	Canyon

Whisper	
Ancillary/Seating/Workspaces	
54” wide	
73% recycled polyester	
27% polyester	
with 11.3% ocean bound plastic	
1WS01	Sand Dollar
1WS02	Pebble
1WS03	Silver Birch
1WS04	Iceberg
1WS05	Silver Pine
1WS06	Carbon
1WS07	Cumin
1WS12	Willow
1WS13	Sea Grass
1WS14	Pool
1WS15	Blueberry
1WS16	Glacier
1WS17	Grey
1WS18	Canyon

Price Category 2

Aristo	
Ancillary/Seating/Workspaces	
54” wide	
88% recycled polyester	
12% polyester	
Acrylic backing	
3AR01	Forest Moss
3AR02	Light Brindle
3AR03	Mink
3AR04	Copper
3AR05	Adobe
3AR06	Cherry
3AR07	Lilac
3AR08	Green Apple
3AR09	Surf
3AR10	Waterfall
3AR11	Cadet
3AR12	Tin
3AR13	Pewter
3AR14	Grey Brindle
3AR15	Grey Black

Cord	
Workspaces	
66” wide	
51% antimony-free polyester	
49% polyester	
5101	Ivory
5102	White Ash
5103	Linen
5104	Bamboo
5105	Sepia
5107	Sesame
5109	Bayou
5111	Spring Wood
5112	Summer White

Crepe	
Ancillary/Seating/Workspaces	
54” wide	
100% recycled polyester,	
with 43.6% ocean bound plastic	
9201	Licorice
9203	Smoke
9207	Cherry
9223	Cadet
9241	Beachglass
9249	Stone *
9251	Fog *
9252	Slate Grey
9261	Shale
9262	Graphite
9265	Mineral
9266	Persimmon
9267	Juniper
9268	Glacier
9269	Cascade
9270	Navy

* Colors available on Exclave® Video-friendly Tackable Boards and Stowage Tackable Backdrop.

Price category 2 continued on next page

- Maharam textiles are on assigned lead times A.
- Fabric numbers are listed as Herman Miller fabric number/Maharam fabric number.

Price Category 2
continued

Epic
Ancillary/Seating/Workspaces
54” wide
56% recycled polyester
44% polyester
Acrylic backing

3EP01	Alabaster
3EP02	Smoke
3EP03	Falcon
3EP05	Copper
3EP06	Urban Orange
3EP07	Poppy
3EP10	Clover
3EP11	Loden
3EP14	Peacock
3EP15	Cadet
3EP16	Indigo
3EP17	Spring Wood
3EP18	Grey Brindle
3EP19	Seed
3EP20	Carbon Dark

Hint
Ancillary/Seating/Workspaces
54” wide
76% recycled polyester
24% polyester

3DP01	Sediment
3DP02	Gunmetal
3DP03	Silt
3DP04	Porcelain
3DP05	Indigo
3DP06	Fern
3DP07	Adobe
3DP08	Red Sea

Horizon
Workspaces
54” wide
65% antimony-free polyester
35% polyester

4N01	Rye Grass
4N02	Sugar Pine
4N03	Silver Pine
4N04	White Ash
4N05	Spring Wood
4N08	Haystack
4N09	Oat Grass
4N13	Pine Cone
4N15	Elderberry

Marvel
Ancillary/Seating
54” wide
100% pvc-free polyurethane
antimicrobial, antibacterial finish

1MV01	Summer White
1MV02	Sand Dollar
1MV03	Espresso
1MV04	Folkstone Grey
1MV05	Graphite
1MV06	Onyx
1MV07	Polar Blue
1MV08	Blush Grey
1MV12	Red
1MV14	Pine
1MV15	Teal Green
1MV16	Twilight

Medley
Ancillary/Seating/Workspaces
54” wide
100% polyester

1HA01	Stone *
1HA02	Trail
1HA03	Charcoal
1HA04	Cinder
1HA07	Chutney
1HA09	Feather Grey *
1HA11	Loden
1HA13	Bayou *
1HA14	Blue Grotto
1HA15	Blueberry
1HA22	Khaki
1HA23	Pewter
1HA24	Yellow Oxide
1HA25	Vintage Rose
1HA26	Raspberry
1HA27	Acai Berry

* Colors available on Exclave® Video-friendly Tackable Boards and Stowage Tackable Backdrop

Mellow
Ancillary/Seating/Workspaces
54” wide
100% recycled polyester,
with 16% ocean bound plastic

4ME01	Mineral
4ME04	Olive
4ME05	Glacier
4ME06	Oceanside
4ME07	Charcoal

Metaphor – Maharam
Ancillary/Seating/Workspaces
54” wide
100% polyester
Acrylic backing

ZMA01/466553-001	Afterfeather *
ZMA02/466553-002	Moonflower
ZMA03/466553-003	Handcraft
ZMA04/466553-004	Crossroad
ZMA05/466553-005	Chondrite
ZMA06/466553-006	Detective
ZMA07/466553-007	Steamship
ZMA08/466553-008	Electricity
ZMA09/466553-009	Takeoff
ZMA10/466553-010	Parachute
ZMA11/466553-011	Blueshift
ZMA12/466553-012	Dockyard
ZMA13/466553-013	Bathe
ZMA14/466553-014	Icebound
ZMA15/466553-015	Thermosphere
ZMA16/466553-016	Aboard
ZMA17/466553-017	Agateware
ZMA18/466553-018	Homeland
ZMA19/466553-019	Rockfall
ZMA20/466553-020	Undergrowth
ZMA21/466553-021	Gremolata
ZMA22/466553-022	Patina
ZMA23/466553-023	Sylvan
ZMA24/466553-024	Outfield
ZMA25/466553-025	Windbreak
ZMA26/466553-026	Saguaro

Price category 2 continued on next page

- Maharam textiles are on assigned lead times A.
- Fabric numbers are listed as Herman Miller fabric number/Maharam fabric number.

Price Category 2
continued

Metaphor *continued*	
ZMA27/466553-027	Barnwood
ZMA28/466553-028	Cookshop
ZMA29/466553-029	Amandine
ZMA30/466553-030	Bodhran
ZMA31/466553-031	Centerstage
ZMA32/466553-032	Focaccia
ZMA33/466553-033	Bumblebee
ZMA34/466553-034	Microbrew
ZMA35/466553-035	Sauna
ZMA36/466553-036	Gazebo
ZMA37/466553-037	Pirouette
ZMA38/466553-038	Heartbeat
ZMA39/466553-039	Shino
ZMA40/466553-040	Sunrise
ZMA41/466553-041	Florist
ZMA42/466553-042	Beadwork
ZMA43/466553-043	Framboise
ZMA44/466553-044	Wisteria
ZMA45/466553-045	Warrior

* Colors not available on Eames Aluminum Group, Soft Pad, Sofa Compact, Molded Fiberglass/Plastic Chairs, Task Chair, Wire Chairs, Nelson Platform Bench Cushion, Swoop Plywood Lounge Chair.

Muse – Maharam	
Ancillary/Seating/Workspaces	
54” wide	
100% post-consumer recycled polyester	
8I101/466487-001	Crescendo
8I102/466487-002	Resonate
8I103/466487-003	Runway
8I104/466487-004	Ascend
8I105/466487-005	Veil *
8I106/466487-006	Refresh *
8I107/466487-007	Clear *
8I108/466487-008	Fantasy
8I109/466487-009	Miso
8I110/466487-010	Compass
8I111/466487-011	Bergamot *
8I112/466487-012	Grasshopper

Muse *continued*	
8I113/466487-013	Goal
8I114/466487-014	Mistletoe
8I115/466487-015	Seaglass *
8I116/466487-016	Frigid
8I117/466487-017	Riverbend
8I118/466487-018	Noble
8I119/466487-019	Pulsar
8I120/466487-020	Velella
8I121/466487-021	Sailboat
8I122/466487-022	Sparse
8I123/466487-023	Vase
8I124/466487-024	Haven
8I125/466487-025	Mead
8I126/466487-026	Neat
8I127/466487-027	Jovial
8I128/466487-028	Theater
8I129/466487-029	Poinsettia
8I130/466487-030	Celebrate
8I131/466487-031	Spectacle

* Colors not available on Valor Seating.

Rhythm	
Ancillary/Seating	
54” wide	
100% polyester	
3002	Green Apple
3004	Bayou
3005	Berry Blue
3006	Iris
3007	Twilight
3009	Poppy
3010	Molasses
3012	Khaki
3013	Mink
3014	Black *
3015	Charcoal *

* Colors available on Embody® Chair.

Sequel	
Ancillary/Seating/Workspaces	
54” wide	
100% vinyl	
100% polyester knit backing	
Resilience® finish	
3SL01	White
3SL02	Pebble
3SL03	Mushroom
3SL04	Stone
3SL06	Rattan
3SL09	Seal
3SL10	Blue Fog
3SL11	Folkstone
3SL12	Shale
3SL13	Slate Grey
3SL14	Charcoal
3SL15	Carbon Dark
3SL28	Navy *

* Color available on Eames® Tandem Sling Seating.

Terra	
Ancillary/Seating/Workspaces	
54” wide	
100% post-consumer recycled biodegradable polyester *	
4TE01	Spring Wood
4TE02	Zinc
4TE03	Pine Cone
4TE04	Charcoal

* 1% biodegradation in 1,278 days under ASTM D5511 conditions. No evidence of further degradation.

Twine	
Workspaces	
66” wide	
100% recycled polyester	
3TW01	Silver Birch
3TW02	Ivory
3TW03	Alabaster
3TW04	Bamboo
3TW05	Iceberg
3TW06	Charcoal
3TW07	Feather Grey
3TW08	Shale

Twist	
Ancillary/Seating/Workspaces	
54” wide	
80% antimony-free polyester	
13% recycled polyester	
7% polyester	
8R05	Wicker
8R10	Poppy
8R14	Tin
8R15	Shale
8R16	Graphite
8R17	Birch
8R18	Sepia
8R22	Blueberry
8R23	Green Apple
8R26	Gunmetal
8R27	Cinder
8R29	Pekoe
8R33	Forest
8R35	Waterfall
8R36	Midnight Blue
8R37	Carbon Dark

Twist	
Workspaces	
For workspaces products only.	
54” wide	
80% antimony-free polyester	
13% recycled polyester	
7% polyester	
5S03	Oyster

- Maharam textiles are on assigned lead times A.
- Fabric numbers are listed as Herman Miller fabric number/Maharam fabric number.

Price Category 3

Ace

Ancillary/Seating
54” wide
100% polyurethane
Polyester knit backing
Stain resistant finish

3AC01	Summer White
3AC02	White Ash
3AC03	Rye
3AC04	Metal
3AC05	Clay
3AC06	Chestnut
3AC08	Camelback
3AC09	Chipotle
3AC12	Artichoke
3AC13	Sepia Dark
3AC14	Aloe
3AC15	Flint
3AC16	Blue Sky
3AC17	Oceanside
3AC18	Midnight
3AC20	Frost
3AC21	Lead
3AC22	Black

Fractal

Ancillary/Seating/Workspaces
58” wide
84% recycled polyester
16% polyester

43Z01	Granite
43Z02	Golden Olive
43Z03	Verdant
43Z04	Cadet

Ground Cloth®

Workspaces
66” wide
100% polyester

4701	Vapor Grey
4721	Warm White *
4722	Fog *
4723	Straw *
4724	Red Orange *
4726	Green Apple *
4727	Caribbean *
4728	Midnight *
4729	Cappuccino *

* Colors available on Exclave® Video-friendly Tackable Boards and Stowage Tackable Backdrop

Latitude

Seating
Colors for Mirra 2 Chairs
100% polyester

8M10	Alpine
8M17	Black
8M23	French Press
8M27	Cordovan
8M28	Ochre
8M28	Ultramarine
8M28	Olive

Meld – Maharam

Ancillary/Seating/Workspaces
54” wide
68% post-consumer recycled polyester
32% polyester
PFOA-Free stain resistant

ZM201/466387-201	Vast
ZM202/466387-202	Panda **
ZM203/466387-203	Skyline *
ZM204/466387-204	Knight **
ZM205/466387-205	Quill **
ZM206/466387-206	Pipe
ZM207/466387-207	Grate *
ZM208/466387-208	Gloss

Meld *continued*

ZM209/466387-209	Bulb
ZM210/466387-210	Bride
ZM211/466387-211	Stark
ZM212/466387-212	Seashell
ZM213/466387-213	Antler
ZM214/466387-214	Crater *
ZM215/466387-215	Perennial
ZM216/466387-216	Mulberry
ZM217/466387-217	Fuchsia *
ZM218/466387-218	Amethyst *
ZM219/466387-219	Merlot
ZM220/466387-220	Magma *
ZM221/466387-221	Rooster
ZM222/466387-222	Heat *
ZM223/466387-223	Clementine
ZM224/466387-224	Fox
ZM225/466387-225	Kiss *
ZM226/466387-226	Bare
ZM227/466387-227	Blonde
ZM228/466387-228	Mimosa
ZM229/466387-229	Comet *
ZM230/466387-230	Honeydew
ZM231/466387-231	Wild *
ZM232/466387-232	Vine
ZM233/466387-233	Seed
ZM234/466387-234	Kale *
ZM235/466387-235	Waterfall *
ZM236/466387-236	Nordic *
ZM237/466387-237	Reef *
ZM238/466387-238	Wave
ZM239/466387-239	Isle **
ZM240/466387-240	Creek
ZM241/466387-241	Mariner *
ZM242/466387-242	Globe
ZM243/466387-243	Spa

* Colors available on 20-day lead time.
** Colors available on 10-day lead time.

Parcel

Ancillary/Seating/Workspaces
54” wide
100% recycled polyester

4GE01	Gunmetal
4GE02	Brindle
4GE03	Bayou
4GE04	Pesto
4GE05	Golden Olive
4GE06	Copper Sea

Saille - Geiger Textile

Ancillary
57” wide
69% cotton
31% polyester
PFOA-Free stain resistant finish
Acrylic backing

18001	Coal
18002	Shale
18003	Haze
18004	Stone
18005	White *
18006	Beach
18007	Sand
18008	Blush
18009	Brick
18010	Fog
18011	Celadon
18012	Poolside
18013	Summer Sky
18014	Lake
18015	Midnight Blue

* Color not available on Eames® Soft Pad Group Chairs/Ottomans.

Price category 3 continued on next page

- Maharam textiles are on assigned lead times A.
- Fabric numbers are listed as Herman Miller fabric number/Maharam fabric number.

Price Category 3
continued

Price Category 4

Strands

Workspaces
66” wide
100% recycled polyester

8W01	Pebble
8W02	Porcelain
8W03	Taupe
8W04	Honey
8W05	Khaki
8W06	Rye
8W07	Wicker
8W08	Tin
8W09	Cool Grey

Cygnus

Ancillary
For Eames® Aluminum Group Chairs
69% elastomeric
31% polyester

5401	Black
5402	Zinc
5403	Quartz

Daydream

Ancillary/Seating/Workspaces
54” wide
48% wool
41% recycled polyester
9% nylon
2% polyester

3DM01	Rye Grass
3DM02	Silver Birch
3DM03	Pewter
3DM04	Graphite
3DM05	Black
3DM06	Lemongrass
3DM07	Permission
3DM08	Juniper
3DM09	Sea Grass
3DM10	Nightfall

Hush

Workspaces
66” wide
80% polyester
20% viscose

1HS01	Canyon
1HS02	Pesto
1HS03	Bayou
1HS04	Greystone
1HS05	Charcoal
1HS06	Rye Grass
1HS07	Cool Grey
1HS08	Dark Grey
1HS09	Aqua Green
1HS10	Nightfall

Kalista - Geiger Textile

Ancillary
54” wide
71% post-industrial recycled cotton
18% post-industrial recycled polyester
11% polyester
PFOA-Free stain resistant finish

1AL01	Cotton
1AL02	Natural
1AL03	Titanium
1AL04	Pewter
1AL05	Starry Night
1AL06	Red Hot
1AL07	Sun Kissed
1AL08	Dune
1AL09	Beach Glass
1AL10	Bluestone
1AL11	Seaside
1AL12	Night Sky

Lariat – Maharam

Ancillary/Seating
54” wide
100% vinyl

ZLR01/440401-001	001
ZLR02/440401-002	002
ZLR04/440401-004	004
ZLR06/440401-006	006
ZLR07/440401-007	007
ZLR08/440401-008	008
ZLR10/440401-010	010
ZLR11/440401-011	011
ZLR13/440401-013	013
ZLR14/440401-014	014
ZLR15/440401-015	015
ZLR16/440401-016	016
ZLR18/440401-018	018
ZLR20/440401-020	020
ZLR21/440401-021	021
ZLR24/440401-024	024
ZLR25/440401-025	025
ZLR26/440401-026	026

Lariat *continued*

ZLR28/440401-028	028
ZLR31/440401-031	031
ZLR32/440401-032	032
ZLR33/440401-033	033
ZLR34/440401-034	034
ZLR38/440401-038	038
ZLR39/440401-039	Granite
ZLR40/440401-040	Linen
ZLR41/440401-041	Stella
ZLR42/440401-042	Saddle
ZLR43/440401-043	Holly
ZLR44/440401-044	Maroon
ZLR45/440401-045	Siren
ZLR46/440401-046	Reseda
ZLR47/440401-047	Purslane
ZLR48/440401-048	Spire
ZLR49/440401-049	Papyrus
ZLR50/440401-050	Chickadee
ZLR51/440401-051	Requiem

Sync

Ancillary/Seating
55” wide
100% polyester

3SY01	Pine Cone
3SY03	Canyon
3SY04	Truffle
3SY06	Everglade
3SY08	Nightfall
3SY09	Dark Mineral
3SY10	Slate Grey
3SY11	Dark Carbon
3SY12	Black

- Maharam textiles are on assigned lead times A.
- Fabric numbers are listed as Herman Miller fabric number/Maharam fabric number.

Price Category 5

Arlo - Maharam

Ancillary/Seating
70% wool
30% polyester

5YT01	Turn
5YT02	Embers
5YT03	Parallel
5YT04	Octave
5YT05	Musing
5YT06	Summon
5YT07	Dynamic
5YT08	Signals
5YT09	Aspect
5YT10	Dedicate
5YT11	Juniper
5YT12	Cilantro
5YT13	Hawthorn
5YT14	Thread
5YT15	Spalted
5YT16	Warmer
5YT17	Misted
5YT18	Share
5YT19	Chord
5YT20	Heroic
5YT21	Arpeggio
5YT22	Roots
5YT23	Sumac
5YT24	Purl
5YT25	Homeward

Cozy

Ancillary/Seating
54” wide
100% wool

3CY01	Heathered Warm Grey
3CY02	Heathered Rye Grass
3CY03	Heathered Cool Grey
3CY05	Heathered Black
3CY06	Heathered Persimmon
3CY07	Heathered Loden
3CY09	Heathered Lagoon
3CY10	Heathered Twilight

Hopsak

Ancillary/Seating/Workspaces
56” wide
100% recycled polyester

14A20	Black
14A22	Raw Umber Dark
14A26	Grey Blue Dark
14A30	Sepia Dark
14A38	Emerald Dark
14A39	Yellow Dark
14A40	Orange
14A41	Sienna
14A42	Olive Green Dark
14A43	Crimson
14A44	Crimson Dark Dark
14A45	Violet Dark
14A46	Pink Dark Dark
14A47	Ultramarine Dark
14A48	Cobalt Blue
14A49	Terra Cotta
14A50	Ochre Dark

Ingenue - Geiger Textile

Ancillary
54” wide
28% wool
26% viscose
25% acrylic
16% polyester
5% cotton
PFOA-Free stain resistant finish

1GH01	Sand
1GH02	Fog
1GH03	Flannel
1GH04	Trench
1GH05	Vermillion
1GH06	Adriatic
1GH07	Umber
1GH08	Charcoal

Method - Maharam

Ancillary/Seating/Workspaces
54” wide
100% recycled polyester
with 9% ocean-bound plastic

40G01/466579-001	Inspire
40G02/466579-002	Rhea
40G03/466579-003	Noise
40G04/466579-004	Speedway
40G05/466579-005	Villanelle
40G06/466579-006	Maestro
40G07/466579-007	Destiny
40G08/466579-008	Possess
40G09/466579-009	Waterside
40G10/466579-010	Relax
40G11/466579-011	Delightful
40G12/466579-012	Parrotlet
40G13/466579-013	Verdurous
40G14/466579-014	Bosky
40G15/466579-015	Acreage
40G16/466579-016	Allude
40G17/466579-017	Tweed
40G18/466579-018	Korma
40G19/466579-019	Fossilize
40G20/466579-020	Cattail
40G21/466579-021	Shortcake
40G22/466579-022	Racecar
40G23/466579-023	Courtship
40G24/466579-024	Jam
40G25/466579-025	Sparrow

Nico - Maharam

Ancillary/Seating/Workspaces
54” wide
63% wool
21% polyester
16% solution-dyed nylon

ZNC01/466564-001	Alcazar
ZNC02/466564-002	Ironclad
ZNC03/466564-003	Tune
ZNC04/466564-004	Bridegroom
ZNC05/466564-005	Diode
ZNC06/466564-006	Jest
ZNC07/466564-007	Sanctuary
ZNC08/466564-008	Aquarius
ZNC09/466564-009	Houseboat
ZNC10/466564-010	Olympian
ZNC11/466564-011	Tennis
ZNC12/466564-012	Dressage
ZNC13/466564-013	Zing
ZNC14/466564-014	Bitterroot
ZNC15/466564-015	Gemini
ZNC16/466564-016	Posh
ZNC17/466564-017	Sizzle
ZNC18/466564-018	Cheerful
ZNC19/466564-019	Watermelon
ZNC20/466564-020	Toucan
ZNC21/466564-021	Rosin
ZNC22/466564-022	Jousting
ZNC23/466564-023	Jojoba
ZNC24/466564-024	Dromedary
ZNC25/466564-025	Toasty
ZNC26/466564-026	Casaba
ZNC27/466564-027	Greenhouse
ZNC28/466564-028	Sibyl
ZNC29/466564-029	Spearmint
ZNC30/466564-030	Pothos
ZNC31/466564-031	Calathea
ZNC32/466564-032	Landscape
ZNC33/466564-033	Espalier
ZNC34/466564-034	Gecko
ZNC35/466564-035	Meditation

Price category 5 continued on next page

- Maharam textiles are on assigned lead times A.
- Fabric numbers are listed as Herman Miller fabric number/Maharam fabric number.

Price Category 5
continued

Price Category 6

Price Category 7

Summit	
Ancillary/Seating	
54” wide	
100% silicone	
Polyester knit backing	
3SU02	Oyster
3SU03	Zinc
3SU04	Sparrow
3SU07	Black
3SU09	Beachglass
3SU10	Midnight

Vionette - Geiger Textile	
Ancillary	
55” wide	
100% polyester	
1GJ01	White Sand Mix
1GJ02	Desert Mix
1GJ03	Light Gray Mix
1GJ04	Pewter Mix
1GJ05	Cobalt Mix
1GJ06	Prussian Blue Mix
1GJ07	Chocolate Mix
1GJ08	Champagne
1GJ09	Morning Sky
1GJ10	Aquatic
1GJ11	Sapphire
1GJ12	Midnight Blue
1GJ13	Shadow
1GJ14	Java
1GJ15	Carbon
1GJ16	Black
1GJ17	Claret
1GJ18	Poppy

Balance	
Seating	
For Embody® chairs	
100% polyester	
3512	Carbon
3513	Black

Outdoor Weave	
Ancillary	
For Eames® Aluminum Group	
Outdoor Chairs	
50% elastomeric	
50% polypropylene	
7203	Lead
7205	Graphite

Customer’s Own Leather
See Order Information in Appendices. Assigned lead-time textile. A

Bamboo	
Ancillary	
83% bamboo	
17% polyurethane	
1BB01	Ivory
1BB02	Russet
1BB03	Black

Beck – Maharam	
Ancillary/Seating	
55” wide	
78% wool	
22% nylon	
ZB301/466571-001	Overshadow
ZB302/466571-002	Molecule
ZB303/466571-003	Zeitgeist
ZB304/466571-004	Blacksmith
ZB305/466571-005	Cornerstone
ZB306/466571-006	Chainmail
ZB307/466571-007	Buckram
ZB308/466571-008	Callisto
ZB309/466571-009	Interlude
ZB310/466571-010	Letterpress
ZB311/466571-011	Memoir
ZB312/466571-012	Litmus
ZB313/466571-013	Stoic
ZB314/466571-014	Inkpad
ZB315/466571-015	Praxis
ZB316/466571-016	Astute
ZB317/466571-017	Percolate
ZB318/466571-018	Halocline
ZB319/466571-019	Semblance
ZB320/466571-020	Loch
ZB321/466571-021	Lido
ZB322/466571-022	Underwater
ZB323/466571-023	Tetrapod
ZB324/466571-024	Nymph
ZB325/466571-025	Appalachian

Beck *continued*		
ZB326/466571-026	Menthol	
ZB327/466571-027	Woodruff	
ZB328/466571-028	Malachite	
ZB329/466571-029	Botanist	
ZB330/466571-030	Woodlet	
ZB331/466571-031	Katydid	
ZB332/466571-032	Exuberant	
ZB333/466571-033	Retrospect	
ZB334/466571-034	Lambic	
ZB335/466571-035	Argil	
ZB336/466571-036	Brushstroke	
ZB337/466571-037	Candescent	
ZB338/466571-038	Reedbuck	
ZB339/466571-039	Clayware	
ZB340/466571-040	Curio	
ZB341/466571-041	Whimsy	
ZB342/466571-042	Effervescent	
ZB343/466571-043	Lingonberry	
ZB344/466571-044	Resplendent	
ZB345/466571-045	Hollyhock	
ZB346/466571-046	Filigree	
ZB347/466571-047	Plutonic	
ZB348/466571-048	Foundry	
ZB349/466571-049	Patisserie	
ZB390	Gold	007/032/033 *
ZB391	Russet	036/040/039 *
ZB392	Indigo	008/013/014 *
ZB393	Forest	006/031/028 *

* Colors available only on Girard Color Wheel Ottoman.

Price category 7 continued on next page

- Maharam textiles are on assigned lead times A.
- Fabric numbers are listed as Herman Miller fabric number/Maharam fabric number.

Price Category 7
continued

Bellano - Geiger Textile

Ancillary
55” wide
75% wool
10% linen
8% nylon
7% alpaca

1AX01	Pearl
1AX02	Fog
1AX03	Fawn
1AX04	Pumice
1AX05	Pewter
1AX06	Atlantic
1AX07	Black Green
1AX08	Adriatic
1AX09	Coffee
1AX10	Charcoal
1AX11	Umber
1AX12	Magenta
1AX13	Bittersweet
1AX14	Sunflower

Capri - Geiger Textile

Ancillary
55” wide
36% cotton
32% acrylic
24% rayon
8% polyester
PFOA-Free stain resistant finish
Acrylic backing

17201	Snow
17202	Stone
17203	Trench
17204	Graphite
17205	Anthracite
17206	Light Silver
17207	Russet
17208	Chestnut Brown
17209	Sand
17210	Sterling
17211	Cobalt
17212	Ink

Mantle - Maharam

Ancillary/Seating
59% recycled polyester
37% polyester
4% spandex

8PV01	Pavement
8PV02	Future
8PV03	Piper
8PV04	Manifesto
8PV05	Mapo
8PV06	Redwood
8PV07	Rocky
8PV08	Impala
8PV09	Warbler
8PV10	Guild
8PV11	Kinetic
8PV12	Behold
8PV13	Orb
8PV14	Sport
8PV15	Utopia
8PV16	True
8PV17	Galore
8PV18	Parsley
8PV19	Dare
8PV20	Branzino
8PV21	Network
8PV22	Standard
8PV23	Salamander
8PV24	Oscillate

Milaner - Geiger Textile

Ancillary
55” wide
56% wool, 10% acrylic
10% alpaca, 10% cotton
8% nylon, 6% rayon

17101	Linen
17102	Flax
17103	Bark
17104	Deep Navy
17105	Charcoal
17106	Medium Grey
17107	Ash
17108	Crimson

Panno di Dolce - Geiger Textile

Ancillary
55” wide
65% wool
20% nylon
15% alpaca

1AV01	Fog
1AV02	Dune
1AV03	Trench
1AV04	Flannel
1AV05	Charcoal
1AV06	Umber
1AV07	Deep Navy
1AV08	Graphite
1AV09	Orange
1AV10	Pink
1AV11	Deep Red
1AV12	Bright Green
1AV13	Cerulean Blue
1AV14	Deep Cerulean Blue

Pristina - Geiger Textile

Ancillary
55” wide
37% wool
25% viscose
17% acrylic
15% cotton
6% polyester
PFOA-Free stain resistant

1JC01	Dove
1JC02	Goldstone
1JC03	Daybreak
1JC04	Pumice
1JC05	Cappuccino
1JC06	Gunmetal
1JC07	Caspian
1JC08	Café Noir

Resca - Geiger Textile

Ancillary
56” wide
75% wool
10% linen
8% nylon
7% alpaca

1AW01	Fog
1AW02	Dune
1AW03	Trench
1AW04	Flannel
1AW05	Umber
1AW06	Bordeaux

Rowan - Maharam

Ancillary/Seating
77% wool
12% nylon
6% acrylic
5% linen

5K301	Kingdom
5K302	Northern
5K303	Rabbit
5K304	Elephant
5K305	Furrow
5K306	Heirloom
5K307	Appear
5K308	Repose
5K309	Blackcurrant
5K310	Courage
5K311	Bordeaux
5K312	Cherish
5K313	Brickfield
5K314	Hibiscus
5K315	Carnelian
5K316	Cinnabar
5K317	Toasted
5K318	Revea
5K319	Cortado
5K320	Medallion
5K321	Polenta

Price category 7 continued on next page

- Maharam textiles are on assigned lead times A.
- Fabric numbers are listed as Herman Miller fabric number/Maharam fabric number.

Price Category 7
continued

Rowan *continued*	
5K322	Prized
5K323	Travertine
5K324	Companion
5K325	Library
5K326	Fable
5K327	Pixie
5K328	Arboretum
5K329	Ease
5K330	Sapling
5K331	Cottonwood
5K332	Scout
5K333	Valleyside
5K334	Ornament
5K335	Zucchini
5K336	Ethereal
5K337	Springtide
5K338	Traverse
5K339	Untold
5K340	Flowing
5K341	Laguna
5K342	Cerulean
5K343	Soundscape
5K344	Message
5K345	Freefall
5K346	Musical
5K347	Puzzle
5K348	Operatic
5K349	Daydream
5K350	Shale
5K351	Forward
5K352	Anthracite

Vesture - Geiger Textile	
Ancillary	
55” wide	
40% wool, 25% polyester	
20% silk, 15% nylon	
PFOA-Free stain resistant finish	
21701	Ashen
21702	Dark Blush
21703	Dusk
21704	Medium Gray
21705	Twilight

Wool Epinglé - Geiger Textile	
Ancillary	
54” wide	
100% wool	
16201	Swiss Red
16202	Orange
16203	Light Chestnut Brown
16204	Light Burnt Umber
16205	Pale Native Umber
16207	Grey
16208	Natier Blue
16209	Deep Cerulean Blue
16210	Anthracite
16211	Natural Native Umber
16212	Chestnut Brown

Wool Tweed - Geiger Textile	
Ancillary	
54” wide	
80% wool, 20% nylon	
16601	Trench
16602	Pewter
16603	Ruby
16604	Blue Gray
16605	Navy
16606	Umber
16607	Charcoal

Price Category 8

Breeze - Maharam	
Workspaces	
120” wide	
65% FR polyester	
35% post-consumer recycled	
FR polyester	
1QG06/283817-006	Meteorite
1QG09/283817-009	Serum

Luce - Maharam	
Ancillary/Seating	
59” wide	
75% post-consumer recycled wool	
20% polyester	
5% nylon	
ZLU01/466566-001	Brioche
ZLU02/466566-002	Blanched
ZLU03/466566-003	Relic
ZLU04/466566-004	Sinter
ZLU05/466566-005	Scoria
ZLU06/466566-006	Austere
ZLU07/466566-007	Pigment
ZLU08/466566-008	Alkali
ZLU09/466566-009	Tidal
ZLU10/466566-010	Imbue
ZLU11/466566-011	Reservoir
ZLU12/466566-012	Brine
ZLU13/466566-013	Undertone
ZLU14/466566-014	Prelude
ZLU15/466566-015	Submerge
ZLU16/466566-016	Cypress
ZLU17/466566-017	Awash
ZLU18/466566-018	Adriatic
ZLU19/466566-019	Province
ZLU20/466566-020	Virescent
ZLU21/466566-021	Nettle
ZLU22/466566-022	Agrarian
ZLU23/466566-023	Serpentine
ZLU24/466566-024	Laurel
ZLU25/466566-025	Clarion
ZLU26/466566-026	Gooseberry
ZLU27/466566-027	Swelter
ZLU28/466566-028	Etruscan
ZLU29/466566-029	Coulis
ZLU30/466566-030	Rubescent

Luce *continued*	
ZLU31/466566-031	Akoya
ZLU32/466566-032	Radiant
ZLU33/466566-033	Regent
ZLU34/466566-034	Spectral
ZLU35/466566-035	Thistle

Tempo – Maharam	
Ancillary	
55” wide	
100% polyester	
Polyester backing	
26S01/466589-001	Chert
26S02/466589-002	Grandstand
26S03/466589-003	Restful
26S04/466589-004	Battleship
26S05/466589-005	Lavender
26S06/466589-006	Dockside
26S07/466589-007	Swimming
26S08/466589-008	Ambience
26S09/466589-009	Adornment
26S10/466589-010	Remedy
26S11/466589-011	Fang
26S12/466589-012	Inshore
26S13/466589-013	Camouflage
26S14/466589-014	Mesclun
26S15/466589-015	Farmland
26S16/466589-016	Tadpole
26S17/466589-017	Purr
26S18/466589-018	Snowman
26S19/466589-019	Beehive
26S20/466589-020	Gazelle
26S21/466589-021	Shiitake
26S22/466589-022	Flaxseed
26S23/466589-023	Crawdad
26S24/466589-024	Flowery
26S25/466589-025	Burgundy
26S26/466589-026	Rangoli
26S27/466589-027	Petunia
26S28/466589-028	Campsite

Price category 8 continued on next page

- Maharam textiles are on assigned lead times A.
- Fabric numbers are listed as Herman Miller fabric number/Maharam fabric number.

Price Category 8
continued

Whim	
Ancillary	
54” wide	
34% viscose	
33% acrylic	
17% wool	
8% polyester	
9DA01	Warm White
9DA02	Rye
9DA03	Mustard Seed
9DA04	Terra Cotta
9DA05	Fir
9DA06	Navy
9DA07	Pewter

Price Category 9

Alpaca Mohair - Geiger Textile	
Ancillary	
54” wide	
63% alpaca	
21% cotton, 16% polyester	
18510	Dune
18511	Trench
18512	Vicuna
18570	Sepia
18571	Umber
18580	Fog
18581	Flannel
18582	Charcoal

Campana – Maharam	
Ancillary/Seating	
59” wide	
85% wool	
15% nylon	
ZC001/466571-001	Viverine
ZC002/466571-002	Lithograph
ZC003/466571-003	Moonscape
ZC004/466571-004	Brevity
ZC005/466571-005	Linear
ZC006/466571-006	Hinterland
ZC007/466571-007	Mural
ZC008/466571-008	Sloe
ZC009/466571-009	Interstellar
ZC010/466571-010	Mythology
ZC011/466571-011	Scintillate
ZC012/466571-012	Succession
ZC013/466571-013	Visceral
ZC014/466571-014	Hemisphere
ZC015/466571-015	Troposhpere
ZC016/466571-016	Skye
ZC017/466571-017	Seaward
ZC018/466571-018	Nemorous
ZC019/466571-019	Allegory
ZC020/466571-020	Olivine
ZC021/466571-021	Reptilian
ZC022/466571-022	Basil
ZC023/466571-023	Fanleaf
ZC024/466571-024	Beachgrass
ZC025/466571-025	Hayfield

Campana *continued*	
ZC026/466571-026	Freesia
ZC027/466571-027	Rhodium
ZC028/466571-028	Undercoat
ZC029/466571-029	Airbrush
ZC030/466571-030	Shellfish
ZC031/466571-031	Mojave
ZC032/466571-032	Renaissance
ZC033/466571-033	Decoupage
ZC034/466571-034	Outback
ZC035/466571-035	Millipede

Gemma – Maharam	
Ancillary/Seating	
55” wide	
85% wool	
15% nylon	
ZGE01/466568-001	Crinoline
ZGE02/466568-002	Angelic
ZGE03/466568-003	Savory
ZGE04/466568-004	Honeycomb
ZGE05/466568-005	Gilded
ZGE06/466568-006	Paddleboat
ZGE07/466568-007	Stagecoach
ZGE08/466568-008	Waterbuck
ZGE09/466568-009	Earnest
ZGE10/466568-010	Auric
ZGE11/466568-011	Carmine
ZGE12/466568-012	Serape
ZGE13/466568-013	Ferric
ZGE14/466568-014	Canyon
ZGE15/466568-015	Alembic
ZGE16/466568-016	Patio
ZGE17/466568-017	Sorrel
ZGE18/466568-018	Root

Gemma *continued*	
ZGE19/466568-019	Mansion
ZGE20/466568-020	Buff
ZGE21/466568-021	Starch
ZGE22/466568-022	Dawn
ZGE23/466568-023	Countryside
ZGE24/466568-024	Dewy
ZGE25/466568-025	Reliquary
ZGE26/466568-026	Deluge
ZGE27/466568-027	Overlay
ZGE28/466568-028	Electron
ZGE29/466568-029	Sheath
ZGE30/466568-030	Quietude
ZGE31/466568-031	Jargon
ZGE32/466568-032	Powder
ZGE33/466568-033	Tide
ZGE34/466568-034	Outwash
ZGE35/466568-035	Enamored
ZGE36/466568-036	Smitten
ZGE37/466568-037	Revere
ZGE38/466568-038	Mangosteen
ZGE39/466568-039	Allium
ZGE40/466568-040	Immense
ZGE41/466568-041	Chamber
ZGE42/466568-042	Cosmos
ZGE43/466568-043	Inkling
ZGE44/466568-044	Rainwater
ZGE45/466568-045	Shade
ZGE46/466568-046	Pendant
ZGE47/466568-047	Axial
ZGE48/466568-048	Fervent
ZGE49/466568-049	Legacy
ZGE50/466568-050	Caliber
ZGE51/466568-051	Temple
ZGE52/466568-052	Evenfall

Price category 9 continued on next page

- Maharam textiles are on assigned lead times A.
- Fabric numbers are listed as Herman Miller fabric number/Maharam fabric number.

Price Category 9
continued

Jasper - Maharam	
Ancillary/Seating	
53” wide	
55% wool	
27% solution-dyed nylon	
18% cotton	
ZJA01/466563-001	Thrill
ZJA02/466563-002	Anise
ZJA03/466563-003	Grapefruit
ZJA04/466563-004	Lifeguard
ZJA05/466563-005	Heartfelt
ZJA06/466563-006	Corsage
ZJA07/466563-007	Earthenware
ZJA08/466563-008	Bear
ZJA09/466563-009	Firelight
ZJA10/466563-010	Dreamcatcher
ZJA11/466563-011	Bobcat
ZJA12/466563-012	Glacial
ZJA13/466563-013	Vaporize
ZJA14/466563-014	Trapdoor
ZJA15/466563-015	Halcyon
ZJA16/466563-016	Observatory
ZJA17/466563-017	Steamboat
ZJA18/466563-018	Aquathlon
ZJA19/466563-019	Cloudless
ZJA20/466563-020	Briny
ZJA21/466563-021	Magical
ZJA22/466563-022	Picnic
ZJA23/466563-023	Herbage
ZJA24/466563-024	Pasture
ZJA25/466563-025	Courtyard
ZJA26/466563-026	Leapfrog

Leather	
Ancillary/Seating	
approx. 50 sq. ft. per hide	
100% leather	
2101	Ivory
2109	Black *
2110	Smoke
2111	Graphite
2112	Khaki
2113	Rattan
2114	Truffle
2115	Alpine
2116	Haze
2117	Sable Grey
2118	Dark Mineral **
2119	Dark Carbon ***
2120	Cranberry
2121	Deep Sea

* Armpad color available on Aeron® Chair, Graphite.
** Armpad color available on Aeron Chair, Mineral.
*** Armpad color available on Aeron Chair, Carbon.

Price Category 10

Bristol Leather - Geiger Textile	
Ancillary	
approx. 55 sq. ft. per hide	
100% leather	
5-507	Black
5-511	Putty
5-519	Hunter
5-520	White
5-521	Ivory
5-522	Parchment
5-537	Caribbean
5-546	Pumice
5-547	Smoke
5-548	Charcoal
5-549	Dark Shale
5-556	Downtown Grey
5-557	City Night
5-559	Ash Grey
5-563	Champagne
5-564	Chestnut Brown
5-565	Dark Sienna
5-566	Earthen
5-567	Desert
5-568	British Green
5-579	Paris Blue
5-583	Atlantic
5-592	Camel
5-594	Taupe
5-597	Pure *
5-598	Cream
5-600	Midnight Blue
5-603	Sangria
5-604	Swiss Red
5-605	Nordic Yellow
5-606	Sky Grey
5-608	Natural

* Color not available on Saiba Chair.

Firma – Maharam	
Ancillary/Seating	
55” wide	
78% wool	
22% nylon	
3KH01/466582-001	Wrath
3KH02/466582-002	Pantomime
3KH03/466582-003	Shaded
3KH04/466582-004	Prologue
3KH05/466582-005	Framework
3KH06/466582-006	Railroad
3KH07/466582-007	Grommet
3KH08/466582-008	Lunisolar
3KH09/466582-009	Snowpack
3KH10/466582-010	Coldsnap
3KH11/466582-011	Sealift
3KH12/466582-012	Brood
3KH13/466582-013	Intertidal
3KH14/466582-014	Confide
3KH15/466582-015	Secluded
3KH16/466582-016	Leisure
3KH17/466582-017	Portfolio
3KH18/466582-018	Strato
3KH19/466582-019	Fogbow
3KH20/466582-020	Snowcone
3KH21/466582-021	Kazoo
3KH22/466582-022	Esteem
3KH23/466582-023	Mackerel
3KH24/466582-024	Brooch
3KH25/466582-025	Caesious
3KH26/466582-026	Islet
3KH27/466582-027	Biosphere
3KH28/466582-028	Hilltop
3KH29/466582-029	Arboreal
3KH30/466582-030	Lineage
3KH31/466582-031	Comfrey
3KH32/466582-032	Circe
3KH33/466582-033	Ecosystem
3KH34/466582-034	Knack
3KH35/466582-035	Watt
3KH36/466582-036	Epiphany
3KH37/466582-037	Gamma
3KH38/466582-038	Taxicab
3KH39/466582-039	Varietal
3KH40/466582-040	Tale

Price category 10 continued on next page

- Maharam textiles are on assigned lead times A.
- Fabric numbers are listed as Herman Miller fabric number/Maharam fabric number.

Price Category 10
continued

Firma *continued*	
3KH41/466582-041	Elemental
3KH42/466582-042	Cuff
3KH43/466582-043	Emu
3KH44/466582-044	Tempeh
3KH45/466582-045	Tephra
3KH46/466582-046	Shellac
3KH47/466582-047	Emporium
3KH48/466582-048	Keratin
3KH49/466582-049	Camwood
3KH50/466582-050	Gloam
3KH51/466582-051	Novela
3KH52/466582-052	Fruitpunch
3KH53/466582-053	Decant
3KH54/466582-054	Milkshake
3KH55/466582-055	Metaphysic
3KH56/466582-056	Carafe
3KH57/466582-057	Voyager
3KH58/466582-058	Tenebrous
3KH59/466582-059	Subtext
3KH60/466582-060	Silent

Gemma Multi – Maharam	
Ancillary/Seating	
55” wide	
85% wool	
15% nylon	
ZGF01/466569-001	Andromeda
ZGF02/466569-002	Dappled
ZGF03/466569-003	Lyra
ZGF04/466569-004	Flaunt
ZGF05/466569-005	Celluloid
ZGF06/466569-006	Hydrozoa
ZGF07/466569-007	Firefly
ZGF08/466569-008	Pisces
ZGF09/466569-009	Strath
ZGF10/466569-010	Erosion
ZGF11/466569-011	Cabaret
ZGF12/466569-012	Candytuft
ZGF13/466569-013	Juice
ZGF14/466569-014	Fairground
ZGF15/466569-015	Copperplate
ZGF16/466569-016	Sunbird
ZGF17/466569-017	Cinematic
ZGF18/466569-018	Clairvoyant

Gemma Multi *continued*	
ZGF19/466569-019	Crocus
ZGF20/466569-020	Memoir
ZGF21/466569-021	Roulette
ZGF22/466569-022	Voltaic
ZGF23/466569-023	Compote
ZGF24/466569-024	Lambent
ZGF25/466569-025	Twister
ZGF26/466569-026	Chronicle
ZGF27/466569-027	Sidereal
ZGF28/466569-028	Tanzanite
ZGF29/466569-029	Crystalize
ZGF30/466569-030	Chromium
ZGF31/466569-031	Pallium
ZGF32/466569-032	Spectre
ZGF33/466569-033	Courgette
ZGF34/466569-034	Viper
ZGF35/466569-035	Sunlit
ZGF36/466569-036	Heavenly
ZGF37/466569-037	Vernal
ZGF38/466569-038	Cress
ZGF39/466569-039	Limn
ZGF40/466569-040	Horseradish
ZGF41/466569-041	Shandy
ZGF42/466569-042	Granary
ZGF43/466569-043	Percolate
ZGF44/466569-044	Motor
ZGF45/466569-045	Unicorn
ZGF46/466569-046	Lobster
ZGF47/466569-047	Rhododendron
ZGF48/466569-048	Taffy
ZGF49/466569-049	Rishi
ZGF50/466569-050	Backcountry
ZGF51/466569-051	Buckthorn
ZGF52/466569-052	Coniferous
ZGF53/466569-053	Delphic
ZGF54/466569-054	Hieroglyph
ZGF55/466569-055	Eiderdown
ZGF56/466569-056	Sandbar
ZGF57/466569-057	Tanager

Gemma Multi Reverse – Maharam	
Ancillary/Seating	
55” wide	
85% wool	
15% nylon	
ZGF58/466569-101	Andromeda Reverse
ZGF59/466569-102	Dappled Reverse
ZGF60/466569-103	Lyra Reverse
ZGF61/466569-104	Flaunt Reverse
ZGF62/466569-105	Celluloid Reverse
ZGF63/466569-106	Hydrozoa Reverse
ZGF64/466569-107	Firefly Reverse
ZGF65/466569-108	Pisces Reverse
ZGF66/466569-109	Strath Reverse
ZGF67/466569-110	Erosion Reverse
ZGF68/466569-111	Cabaret Reverse
ZGF69/466569-112	Candytuft Reverse
ZGF70/466569-113	Juice Reverse
ZGF71/466569-114	Fairground Reverse
ZGF72/466569-115	Copperplate Reverse
ZGF73/466569-116	Sunbird Reverse
ZGF74/466569-117	Cinematic Reverse
ZGF75/466569-118	Clairvoyant Reverse
ZGF76/466569-119	Crocus Reverse
ZGF77/466569-120	Memoir Reverse

Gemma Multi Reverse *continued*	
ZGF78/466569-121	Roulette Reverse
ZGF79/466569-122	Voltaic Reverse
ZGF80/466569-123	Compote Reverse
ZGF81/466569-124	Lambent Reverse
ZGF82/466569-125	Twister Reverse
ZGF83/466569-126	Chronicle Reverse
ZGF84/466569-127	Sidereal Reverse
ZGF85/466569-128	Tanzanite Reverse
ZGF86/466569-129	Crystalize Reverse
ZGF87/466569-130	Chromium Reverse
ZGF88/466569-131	Pallium Reverse
ZGF89/466569-132	Spectre Reverse
ZGF90/466569-133	Courgette Reverse
ZGF91/466569-134	Viper Reverse
ZGF92/466569-135	Sunlit Reverse
ZGF93/466569-136	Heavenly Reverse
ZGF94/466569-137	Vernal Reverse
ZGF95/466569-138	Cress Reverse
ZGF96/466569-139	Limn Reverse
ZGF97/466569-140	Horseradish Reverse
ZGF98/466569-141	Shandy Reverse
ZGF99/466569-142	Granary Reverse

- Maharam textiles are on assigned lead times A.
- Fabric numbers are listed as Herman Miller fabric number/Maharam fabric number.

Price category 10 continued on next page

Price Category 10
continued

Gemma Multi Reverse *continued*	
ZGFA0/466569-143	Percolate Reverse
ZGFA1/466569-144	Motor Reverse
ZGFA2/466569-145	Unicorn Reverse
ZGFA3/466569-146	Lobster Reverse
ZGFA4/466569-147	Rhododendron Reverse
ZGFA5/466569-148	Taffy Reverse
ZGFA6/466569-149	Rishi Reverse
ZGFA7/466569-150	Backcountry Reverse
ZGFA8/466569-151	Buckthorn Reverse
ZGFA9/466569-152	Coniferous Reverse
ZGFB0/466569-153	Delphic Reverse
ZGFB1/466569-154	Hieroglyph Reverse
ZGFB2/466569-155	Eiderdown Reverse
ZGFB3/466569-157	Tanager Reverse

Petra - Maharam	
Ancillary/Seating	
55” wide	
70% wool	
19% linen	
11% nylon	
ZP401/466580-001	Hieroglyph
ZP402/466580-002	Interior
ZP403/466580-003	Samovar
ZP404/466580-004	Calcite
ZP405/466580-005	Silversmith
ZP406/466580-006	Rivet
ZP407/466580-007	Carpolite
ZP408/466580-008	Bonbon

Petra *continued*	
ZP409/466580-009	Dreamy
ZP410/466580-010	Bejewel
ZP411/466580-011	Sashimi
ZP412/466580-012	Spirula
ZP413/466580-013	Chalet
ZP414/466580-014	Reindeer
ZP415/466580-015	Nostalgia
ZP416/466580-016	Trove
ZP417/466580-017	Narcissus
ZP418/466580-018	Yurt
ZP419/466580-019	Congee
ZP420/466580-020	Genepy
ZP421/466580-021	Herbaceous
ZP422/466580-022	Paddock
ZP423/466580-023	Precious
ZP424/466580-024	Biome
ZP425/466580-025	Tinted
ZP426/466580-026	Pelagic
ZP427/466580-027	Bluebill
ZP428/466580-028	Chicory
ZP429/466580-029	Eaglet
ZP430/466580-030	Permafrost
ZP431/466580-031	Atlantic
ZP432/466580-032	Airstream
ZP433/466580-033	Debonair

Superweave - Maharam	
Ancillary	
54” wide	
75% polyester	
25% cotton	
Z2203/466241-005	Sienna
Z2204/466241-002	Ochre
Z2207/466241-004	Marine
Z2208/466241-003	Olive
Z2220/466241-001	Orange and Pink

Price Category 11

Felix - Maharam	
Ancillary/Seating	
85% wool	
15% nylon	
3BS01	Angular
3BS02	Shark
3BS03	Easy
3BS04	Cue
3BS05	Rye
3BS06	Champion
3BS07	Between
3BS08	Propose
3BS09	Rising
3BS10	Tile
3BS11	Place
3BS12	Kernel
3BS13	Pinnacle
3BS14	Darling
3BS15	Seasonal
3BS16	Shipmate
3BS17	Jump
3BS18	Geyser
3BS19	Team

Prone Leather - Maharam	
Ancillary	
approx. 50 sq. ft. per hide	
100% leather	
protective top coat	
1NX01/700020-001	Lotus
1NX02/700020-002	Timbre
1NX03/700020-003	Essence
1NX04/700020-004	Script
1NX05/700020-005	Gambit
1NX06/700020-006	Obsidian
1NX07/700020-007	Sail
1NX09/700020-009	Vine
1NX10/700020-010	Yarrow
1NX13/700020-013	Balsa
1NX14/700020-014	Shore
1NX15/700020-015	Bricolage
1NX17/700020-017	Ledge
1NX19/700020-019	Mantra
1NX20/700020-020	Java
1NX21/700020-021	Lute
1NX22/700020-022	Glow
1NX23/700020-023	Hickory

Tenera Leather - Geiger Textile	
Ancillary	
approx. 55 sq. ft. per hide	
100% leather	
17501	Cement
17502	Marzipan
17504	Raw Sienna
17505	Maple
17508	Cranberry
17510	Dark Chocolate
17511	Black
17512	Carbon
17513	Sapphire

- Maharam textiles are on assigned lead times A.
- Fabric numbers are listed as Herman Miller fabric number/Maharam fabric number.

Price Category 12-13

No fabrics available at this time.

Price Category 14

Lanalux - Maharam	
Ancillary	
54” wide	
100% wool	
Z1375/466240-005	Black/White
Z1378/466240-006	Olive/Black
Z1380/466240-001	Natural
Z1383/466240-002	Umber
Z1384/466240-007	Natural/Black
Z1386/466240-003	Orange
Z1387/466240-004	Crimson

Price Category A

No fabrics available at this time.

Price Category B

Medium – Maharam	
Ancillary/Seating/Workspaces	
54” wide	
100% polyester	
VM01/463490-001	Raven
VM02/463490-002	Smoke
VM03/463490-003	Alloy
VM04/463490-004	Flax
VM07/463490-007	Espresso
VM14/463490-014	Laser
VM16/463490-016	Port
VM22/463490-022	Marina
VM29/463490-029	Pistachio
VM32/463490-032	Prospect
VM36/463490-036	Delight
VM39/463490-039	Nautical
VM40/463490-040	Pool
VM44/463490-044	Washed
VM45/463490-045	Sculpture
VM46/463490-046	Thatched
VM47/463490-047	Hike
VM48/463490-048	Tangle
VM49/463490-049	Pacific
VM50/463490-050	Cosmic
VM51/463490-051	Cascade
VM52/463490-052	Blackberry
VM53/463490-053	Nasturtium

Messenger – Maharam	
Ancillary/Seating/Workspaces	
54” wide	
78% post-industrial recycled polyester	
15% polyester, 7% nylon	
TI07/458640-007	Shadow
TI08/458640-008	Bayou *
TI24/458640-024	Poppy
TI25/458640-025	Mao
TI29/458640-029	Onyx *
TI31/458640-031	Cloud *
TI38/458640-038	Depth *
TI40/458640-040	Nile *
TI41/458640-041	Azure *

Price category B continued on next page

- Maharam textiles are on assigned lead times A.
- Fabric numbers are listed as Herman Miller fabric number/Maharam fabric number.

Price Category B
continued

Messenger *continued*	
TI45/458640-045	Cactus *
TI46/458640-046	Ice * **
TI48/458640-048	Neon
TI50/458640-050	Hydrangea
TI53/458640-053	Tangelo
TI54/458640-054	Lumine *
TI58/458640-058	Snow ** ***
TI60/458640-060	Peridot
TI61/458640-061	Capri *
TI62/458640-062	Ultramarine
TI63/458640-063	Squall
TI66/458640-066	Cassis
TI67/458640-067	Aster
TI69/458640-069	Cherry
TI70/458640-070	Vibrant
TI71/458640-071	Satsuma *
TI72/458640-072	Maize
TI76/458640-076	Fossil
TI77/458640-077	Ash
TI78/458640-078	Tusk
TI79/458640-079	Oyster **
TI81/458640-081	Husk
TI84/458640-084	Robust
TI85/458640-085	Beyond
TI86/458640-086	Voyage *
TI87/458640-087	Everglade
TI89/458640-089	Blanch ***
TI90/458640-090	Longspur
TI91/458640-091	Vireo
TI92/458640-092	Dipper
TI93/458640-093	Gale
TI94/458640-094	Hunter
TI95/458640-095	Lime
TI96/458640-096	Apple
TI97/458640-097	Krill
TI98/458640-098	Catalyst

* Colors available on 20-day lead time.
** Colors not available on Eames Molded Fiberglass and Molded Plastic Side Chairs.
*** Colors not available on Valor Seating.

Price Category C

Manner - Maharam	
Ancillary/Seating/Workspaces	
54” wide	
65% post-industrial	
recycled polyester	
35% post-consumer	
recycled polyester	
Z2701/466177-001	Magic
Z2702/466177-002	Carob
Z2703/466177-003	Porpoise
Z2704/466177-004	Flint
Z2705/466177-005	Hush *
Z2706/466177-006	Nuance
Z2711/466177-011	Ember
Z2712/466177-012	Wagon
Z2713/466177-013	Ablaze
Z2714/466177-014	Peel
Z2716/466177-016	Butterscotch
Z2717/466177-017	Harvest
Z2720/466177-020	Parakeet
Z2722/466177-022	Aquatic
Z2723/466177-023	Cottage
Z2724/466177-024	Dahlia
Z2725/466177-025	Vivid
Z2726/466177-026	Basin
Z2727/466177-027	Schooner
Z2728/466177-028	Slope
Z2729/466177-029	Silverpoint
Z2730/466177-030	Lattice
Z2731/466177-031	Smoky
Z2732/466177-032	Magnetic
Z2733/466177-033	Woad
Z2734/466177-034	Resolute
Z2735/466177-035	Cruise
Z2736/466177-036	Atmospheric
Z2737/466177-037	Cloudburst
Z2738/466177-038	Tidewater
Z2739/466177-039	Firth
Z2740/466177-040	Oceanside
Z2741/466177-041	Grandeur
Z2742/466177-042	Comfort
Z2743/466177-043	Dill
Z2744/466177-044	Poplar
Z2745/466177-045	Citronella
Z2746/466177-046	Passerine

Manner *continued*	
Z2747/466177-047	Southwest
Z2748/466177-048	Roseate
Z2749/466177-049	Charisma
Z2750/466177-050	Siltstone
Z2751/466177-051	Kimono
Z2752/466177-052	Valiant
Z2753/466177-053	Baroness

* Color not available on Eames Aluminum Group, Executive Chairs, Upholstered Molded Plywood Chairs, and Sofa Compact.

Merit - Maharam	
Ancillary/Seating	
54” wide	
76% post-industrial	
recycled polyester	
24% polyester	
PFOA-Free stain resistant	
88Z01/466444-001	Trickle
88Z02/466444-002	Beluga
88Z03/466444-003	Gunmetal
88Z04/466444-004	Blackout
88Z05/466444-005	Superior
88Z06/466444-006	Ocean
88Z07/466444-007	Highborn
88Z08/466444-008	Immersed
88Z09/466444-009	Rainfall
88Z10/466444-010	Blizzard
88Z11/466444-011	Poolside
88Z12/466444-012	Steel
88Z13/466444-013	Zircon
88Z14/466444-014	Ripple
88Z15/466444-015	Aegean
88Z16/466444-016	Armada
88Z17/466444-017	Hedera
88Z18/466444-018	Rainforest
88Z19/466444-019	Gator
88Z20/466444-020	Vineyard
88Z21/466444-021	Pine
88Z22/466444-022	Kiwi
88Z23/466444-023	Kookaburra

Merit *continued*	
88Z24/466444-024	Bellini
88Z25/466444-025	Sunflower
88Z26/466444-026	Sandstorm
88Z27/466444-027	Mudder
88Z28/466444-028	Lynx
88Z29/466444-029	Farro
88Z30/466444-030	Manila
88Z31/466444-031	Starfish
88Z32/466444-032	Brass
88Z33/466444-033	Arrow
88Z34/466444-034	Gelato
88Z35/466444-035	Nectarine
88Z36/466444-036	Macaron
88Z37/466444-037	Alert
88Z38/466444-038	Goji
88Z39/466444-039	Cabernet
88Z40/466444-040	Eggplant
88Z41/466444-041	Hawk
88Z42/466444-042	Stag
88Z43/466444-043	Overcast

Metric – Maharam	
Ancillary/Seating/Workspaces	
54” wide	
51% post-industrial	
recycled polyester	
49% polyester	
Z302/466014-002	Fog
Z303/466014-003	Fleece
Z312/466014-012	Cardinal
Z313/466014-013	Lava
Z318/466014-018	Pollen
Z320/466014-020	Alligator
Z323/466014-023	Tar
Z324/466014-024	Anchor
Z326/466014-026	Admiral
Z327/466014-027	Seaport
Z328/466014-028	Scuba
Z329/466014-029	Skate
Z330/466014-030	Hopscotch
Z331/466014-031	Film
Z332/466014-032	Whale
Z333/466014-033	Downpour
Z334/466014-034	Midday

Price category C continued on next page

- Maharam textiles are on assigned lead times A.
- Fabric numbers are listed as Herman Miller fabric number/Maharam fabric number.

Price Category C
continued

Metric *continued*	
Z335/466014-035	Talisman
Z336/466014-036	Hedgerow
Z337/466014-037	Snorkel
Z338/466014-038	Highway
Z339/466014-039	Canary
Z340/466014-040	Sunny
Z341/466014-041	Aztec
Z342/466014-042	Fruit
Z343/466014-043	Galah
Z344/466014-044	Kiln
Z345/466014-045	Moth

Murmur - Maharam	
Ancillary/Seating	
55” wide	
100% polyester	
PFOA-Free stain resistant	
8EY01/466446-001	Gust
8EY02/466446-002	Harmonica
8EY03/466446-003	Canopy
8EY04/466446-004	Dim
8EY05/466446-005	Peppercorn
8EY06/466446-006	Cauldron
8EY07/466446-007	Conquer
8EY08/466446-008	Rapids
8EY09/466446-009	Seawater
8EY10/466446-010	Baby
8EY11/466446-011	Elderberry
8EY12/466446-012	Iceberg
8EY13/466446-013	Tallgrass
8EY14/466446-014	Underground
8EY15/466446-015	Biome
8EY16/466446-016	Cask
8EY17/466446-017	Argan
8EY18/466446-018	Sundown
8EY19/466446-019	Ignite
8EY20/466446-020	Sultry
8EY21/466446-021	Sangria

Price Category D

Bluff - Maharam	
Ancillary/Seating	
54” wide	
100% polyurethane	
Ink-resistant protective top coat	
Polyester backing	
8I801/466489-001	Loom
8I802/466489-002	Helm
8I803/466489-003	Cruller
8I804/466489-004	Folklore
8I805/466489-005	Beguile
8I806/466489-006	Sherpa
8I807/466489-007	Teleport
8I808/466489-008	Annex
8I809/466489-009	Lorimer
8I810/466489-010	Cinema
8I811/466489-011	Zip
8I812/466489-012	Coach
8I813/466489-013	Supernova
8I814/466489-014	Pirate
8I815/466489-015	Academy
8I816/466489-016	Disco
8I817/466489-017	Equator
8I818/466489-018	Brink
8I819/466489-019	Scene
8I820/466489-020	Petrichor
8I821/466489-021	Exotic
8I822/466489-022	Fauna
8I823/466489-023	Calabash
8I824/466489-024	Fuscous
8I825/466489-025	Wildling
8I826/466489-026	Blitz
8I827/466489-027	Allspice
8I828/466489-028	Lumos
8I829/466489-029	Pilot
8I830/466489-030	Jukebox
8I831/466489-031	Dugout
8I832/466489-032	Claret
8I833/466489-033	Flamenco

Mode – Maharam	
Ancillary/Seating/Workspaces	
54” wide	
80% post-consumer recycled polyester	
20% polyester	
PFOA-Free stain resistant finish	
ZMD01/466337-001	Stroll
ZMD02/466337-002	Intaglio
ZMD03/466337-003	Ominous
ZMD04/466337-004	Machine
ZMD05/466337-005	Talus
ZMD06/466337-006	Marsh
ZMD07/466337-007	Hollow
ZMD08/466337-008	Sycamore
ZMD09/466337-009	Clavicle
ZMD10/466337-010	Billygoat
ZMD11/466337-011	Spindle
ZMD12/466337-012	Lemon
ZMD13/466337-013	Oxeye
ZMD14/466337-014	Henge
ZMD15/466337-015	Goldenrod
ZMD16/466337-016	Cottontail
ZMD17/466337-017	Lioness
ZMD18/466337-018	Oriole
ZMD19/466337-019	Rust
ZMD20/466337-020	Carotene
ZMD21/466337-021	Blush
ZMD22/466337-022	Vermilion
ZMD23/466337-023	Alder
ZMD24/466337-024	Kermes
ZMD25/466337-025	Barberry
ZMD26/466337-026	Petal
ZMD27/466337-027	Valley
ZMD28/466337-028	Odyssey
ZMD29/466337-029	Ballpoint
ZMD30/466337-030	Toile
ZMD31/466337-031	Paradise

Mode *continued*	
ZMD32/466337-032	Angelfish
ZMD33/466337-033	Denim
ZMD34/466337-034	Crush
ZMD35/466337-035	Jetty
ZMD36/466337-036	Saltwater
ZMD37/466337-037	Mallard
ZMD38/466337-038	Celtic
ZMD39/466337-039	Eucalyptus
ZMD40/466337-040	Bonsai
ZMD41/466337-041	Sassafras
ZMD42/466337-042	Yucca
ZMD43/466337-043	Lichen

Spiral - Maharam	
Workspaces	
66” wide	
100% polyester	
ZS301/901882-001	Chalk
ZS303/901882-003	Wheat
ZS304/901882-004	Mica
ZS305/901882-005	Pavement
ZS306/901882-006	Graphite

- Maharam textiles are on assigned lead times A.
- Fabric numbers are listed as Herman Miller fabric number/Maharam fabric number.

Price Category E

Article – Maharam	
Ancillary/Seating	
54” wide	
100% vinyl	
ZAT08/458600-008	Marina
ZAT13/458600-013	Flume
ZAT14/458600-014	Storm
ZAT15/458600-015	Toast
ZAT19/458600-019	Fleece
ZAT22/458600-022	Stone
ZAT26/458600-026	Mercury
ZAT29/458600-029	Bluegrass
ZAT31/458600-031	Truffle
ZAT32/458600-032	Gravel
ZAT33/458600-033	Value
ZAT34/458600-034	Tint
ZAT35/458600-035	Snowflake
ZAT36/458600-036	Chalice
ZAT37/458600-037	Trail
ZAT38/458600-038	Pyramid
ZAT39/458600-039	Desert
ZAT40/458600-040	Lei
ZAT41/458600-041	Rouge
ZAT42/458600-042	Karma
ZAT43/458600-043	Opal
ZAT44/458600-044	Periwinkle
ZAT45/458600-045	Vampire
ZAT46/458600-046	Surf
ZAT47/458600-047	Plumage

Flock - Maharam	
Workspaces	
63” wide	
100% polyester	
ZF301/901892-001	Calm
ZF302/901892-002	Course
ZF303/901892-003	Highlight
ZF305/901892-005	Poppy
ZF306/901892-006	Briefcase
ZF307/901892-007	Monkstrap
ZF308/901892-008	Quag
ZF309/901892-009	Pistachio
ZF310/901892-010	Froth
ZF311/901892-011	Celadon
ZF312/901892-012	Highsea
ZF313/901892-013	China
ZF314/901892-014	Victorian
ZF315/901892-015	Commander
ZF316/901892-016	Raven
ZF317/901892-017	Aluminum

Micro – Maharam	
Ancillary	
54” wide	
100% vinyl	
ZMB01/466099-001	Muslin
ZMB04/466099-004	Basalt
ZMB06/466099-006	Phantom
ZMB07/466099-007	Depth
ZMB08/466099-008	Cottage
ZMB09/466099-009	Hunter
ZMB11/466099-011	Tomatillo
ZMB12/466099-012	Brew
ZMB14/466099-014	Tang
ZMB15/466099-015	Risk

Parallel — Maharam	
Workspaces	
66” wide	
100% recycled polyester	
TT03/901180-003	Fog
TT22/901180-022	Sterling
TT23/901180-023	Linen
TT24/901180-024	Pea
TT27/901180-027	Boulder
TT28/901180-028	Stream
TT29/901180-029	Shiitake
TT32/901180-032	Brandy
TT33/901180-033	Crater
TT36/901180-036	Quail

Price Category F

Apt – Maharam	
Ancillary/Seating	
54” wide	
100% polyurethane/silicone	
Ink-resistant protective top coat	
Polyester backing	
82T12/466392-012	Iris
82T13/466392-013	Nocturnal
82T14/466392-014	Fluid
82T15/466392-015	Eden
82T16/466392-016	Galactic
82T17/466392-017	Shoreline
82T18/466392-018	Jade
82T19/466392-019	Garden
82T20/466392-020	Botanic
82T21/466392-021	Chartreuse
82T23/466392-023	Lyric
82T24/466392-024	Turmeric
82T25/466392-025	Bengal
82T26/466392-026	Core
82T27/466392-027	Mantle
82T28/466392-028	Sorbet
82T32/466392-032	Oak
82T33/466392-033	Castle
82T34/466392-034	Follow
82T35/466392-035	Elixir
82T36/466392-036	Charm
82T37/466392-037	Descend
82T38/466392-009	Sketch
82T39/466392-010	Glacier
82T40/466392-031	Fortress
82T41/466392-030	Lotus
82T42/466392-001	Coconut
82T43/466392-011	Cobblestone
82T44/466392-029	Bloom
82T45/466392-022	Crepe
82T46/466392-006	Hickory
82T47/466392-007	Constellation
82T48/466392-008	Labyrinth
82T49/466392-002	Vibe
82T50/466392-003	Stampede
82T51/466392-004	Lumber
82T52/466392-005	Gingerbread

Price category F continued on next page

- Maharam textiles are on assigned lead times A.
- Fabric numbers are listed as Herman Miller fabric number/Maharam fabric number.

Price Category F
continued

Brindle - Maharam
Ancillary/Seating
58” wide
100% polyester
PFOA-free stain resistant
Acrylic backing

87101/466418-001	Calico
87102/466418-002	Mauve
87103/466418-003	Torch
87104/466418-004	Burnt
87105/466418-005	Barn
87106/466418-006	Pharaoh
87107/466418-007	Sandbur
87108/466418-008	Jungle
87109/466418-009	Inland
87110/466418-009	Seagrass
87111/466418-009	Watercolor
87112/466418-009	Aquarium
87113/466418-009	Drill

Chime - Maharam
Ancillary
54” wide
100% vinyl

V9M3/465350-003	Morel
V9MB/465350-011	Tranquil
V9MJ/465350-020	Slate
V9MV/465350-031	Verve
V9MW/465350-032	Understory

Conduit - Maharam
Ancillary/Seating
58” wide
100% polyester
PFOA-free stain resistant
Acrylic backing

87Z01/466428-001	Space
87Z02/466428-002	Syrup
87Z03/466428-003	Nimbus
87Z04/466428-004	Greystone
87Z05/466428-005	Fawn
87Z06/466428-006	Ghost
87Z07/466428-007	Caribbean
87Z08/466428-008	Canal
87Z09/466428-009	Bonfire

Emit – Maharam
Workspaces
54” wide
55% post-industrial recycled polyester
45% post-consumer recycled polyester
PFOA-free stain resistant

8EX01/466378-001	Wed
8EX02/466378-002	Zebra
8EX03/466378-003	Chiffon
8EX05/466378-005	Nectar
8EX06/466378-006	Elk
8EX08/466378-008	Goldenrod
8EX09/466378-009	Beached
8EX10/466378-010	Samba
8EX11/466378-011	Nest
8EX14/466378-014	Groove
8EX17/466378-017	Haiku
8EX18/466378-018	Bluefin
8EX19/466378-019	Flow
8EX20/466378-020	Xenon
8EX21/466378-021	Artem
8EX22/466378-022	Zen
8EX25/466378-025	Limeade

Instill – Maharam
Ancillary/Seating
54” wide
100% polyurethane
Ink-resistant protective top coat
Polyester backing

74M01/466351-001	Page
74M02/466351-002	Limestone
74M03/466351-003	Bobwhite
74M04/466351-004	Loafer
74M07/466351-007	Shaker
74M08/466351-008	Doe
74M09/466351-009	Ride
74M10/466351-010	Squire
74M11/466351-011	Tannin
74M12/466351-012	Vitis
74M14/466351-014	Quail
74M15/466351-015	Brittanic
74M16/466351-016	Narwhal
74M18/466351-018	Stowaway
74M19/466351-019	Koala
74M20/466351-020	Dorsal
74M21/466351-021	Stealth
74M22/466351-022	Mosey
74M23/466351-023	Beachfront
74M24/466351-024	Discovery
74M25/466351-025	Grasp
74M26/466351-026	Arboreous
74M27/466351-027	Yearling
74M28/466351-028	Allele
74M29/466351-029	Eager
74M30/466351-030	Rise
74M31/466351-031	Latte
74M32/466351-032	Compose
74M33/466351-033	Furrow
74M34/466351-034	Tenor
74M35/466351-035	Annatto
74M36/466351-036	Together
74M37/466351-037	Intention
74M38/466351-038	Overnight
74M39/466351-039	Icecap
74M40/466351-040	Metamorphic
74M41/466351-041	Anthracite

Keen - Maharam
Ancillary/Seating
54” wide
61% polyester
39% polyolefin
PFOA-Free stain resistant
Acrylic backing

89N01/466433-001	Gaur
89N02/466433-002	Lock
89N03/466433-003	Elk
89N04/466433-004	Oatmeal
89N05/466433-005	Lakefront
89N06/466433-006	Argent
89N07/466433-007	Coyote
89N08/466433-008	Eventide
89N09/466433-009	Canal
89N10/466433-010	Rosemary
89N11/466433-011	Herb
89N12/466433-012	Ruby
89N13/466433-013	Loganberry

Ledger – Maharam
Ancillary/Seating
54” wide
100% polyurethane

V9G1/463770-001	001
V9G2/463770-002	002
V9G3/463770-003	003
V9G4/463770-004	004
V9GG/463770-017	017
V9GQ/463770-025	025
V9GS/463770-026	026
V9GU/463770-028	028
V9GV/463770-029	029
V9GW/463770-030	030
V9GX/463770-031	031
V9GY/463770-032	032
V9G18/463770-042	042
V9G19/463770-043	043
V9G20/463770-044	044
V9G21/463770-045	045
V9G22/463770-046	046

Price category F continued on next page

- Maharam textiles are on assigned lead times A.
- Fabric numbers are listed as Herman Miller fabric number/Maharam fabric number.

Price Category F
continued

Loop - Maharam	
Ancillary/Seating	
57” wide	
48% post-industrial recycled polyester	
26% polyester	
26% post-consumer recycled polyester	
PFOA-Free stain resistant Acrylic Backing	
ZLL01/466469-001	Opossum
ZLL02/466469-002	Foundation
ZLL03/466469-003	Naval
ZLL04/466469-004	Buoyant
ZLL05/466469-005	Mockingbird
ZLL06/466469-006	Dynasty
ZLL07/466469-007	Zori
ZLL08/466469-008	Wildfire
ZLL09/466469-009	Floral
ZLL10/466469-010	Penguin

Multiply - Maharam	
Ancillary/Seating	
58” wide	
57% post-consumer recycled polyester	
43% post-industrial recycled polyester	
PFOA-Free stain resistant Acrylic Backing	
82A01/466341-001	Winter
82A02/466341-002	Encore
82A03/466341-003	Swing
82A04/466341-004	Contrast
82A05/466341-005	Sterling
82A06/466341-006	Daze
82A07/466341-007	Sway
82A08/466341-008	Sailor
82A09/466341-009	Mystique
82A10/466341-010	Deep
82A11/466341-011	Craft
82A12/466341-012	Town
82A13/466341-013	Limit
82A14/466341-014	Tamale

Pitch - Maharam	
Ancillary	
54” wide	
100% vinyl	
ZPC04/466186-004	Pollen
ZPC07/466186-007	Apple
ZPC11/466186-011	Voyage
ZPC12/466186-012	Turquoise
ZPC14/466186-014	Inlet
ZPC15/466186-015	Captain
ZPC16/466186-016	Aura
ZPC17/466186-017	Coastal
ZPC18/466186-018	Fog
ZPC19/466186-019	Coal
ZPC21/466186-021	Mulberry
ZPC24/466186-024	Flame
ZPC26/466186-026	Tumbleweed
ZPC29/466186-029	Subtle
ZPC30/466186-030	Buff

Pepper - Maharam	
Ancillary/Seating	
58” wide	
49% polyester	
41% post-industrial recycled polyester	
10% post-consumer recycled polyester	
PFOA-Free stain resistant Acrylic Backing	
8LW01/466486-001	Dojo
8LW02/466486-002	Marengo
8LW03/466486-003	Harlequin
8LW04/466486-004	Pavlova
8LW06/466486-006	Achiote
8LW07/466486-007	Essence
8LW08/466486-008	Genome
8LW09/466486-009	Myriad
8LW10/466486-010	Terrarium

Scuba - Maharam	
Ancillary	
54” wide	
100% polyurethane	
V9B1/464930-001	Vanilla
V9B5/464930-005	Chinchilla
V9B6/464930-006	Mahogany
V9B7/464930-007	Jet
V9B8/464930-008	Charcoal
V9B9/464930-009	Dolphin
V9BA/464930-010	Drizzle
V9BC/464930-012	Conifer
V9BD/464930-013	Bottle
V9BF/464930-015	Tourmaline
V9BG/464930-016	Sapphire
V9BH/464930-017	Electric
V9BL/464930-020	Cabernet
V9BM/464930-021	Brick
V9BN/464930-022	Coral
V9BP/464930-023	Autumn

Strum - Maharam	
Ancillary/Seating	
54” wide	
100% polyurethane with silane-based antimicrobial	
Z3301/466122-001	Overcast
Z3302/466122-002	Ridge
Z3304/466122-004	Pigeon
Z3307/466122-007	Bur
Z3308/466122-008	Abalone
Z3312/466122-012	Lemongrass

Price Category G

Compound - Maharam	
Ancillary/Seating	
54” wide	
100% polyurethane with silane-based antimicrobial	
ZC201/466196-001	Quartz
ZC203/466196-003	Weathered
ZC204/466196-004	Cliff
ZC205/466196-005	Espresso
ZC206/466196-006	Smolder
ZC207/466196-007	Blaze
ZC208/466196-008	Mandarin
ZC209/466196-009	Maple
ZC210/466196-010	Perennial
ZC211/466196-011	Mountainside
ZC212/466196-012	Tundra
ZC213/466196-013	Manatee
ZC214/466196-014	Marine
ZC215/466196-015	Twilight
ZC216/466196-016	Shelter
ZC217/466196-017	Vessel
ZC218/466196-018	Smoke
ZC219/466196-019	Fog

Fluent Crypton - Maharam	
Ancillary	
54” wide	
52% polyester	
31% post-industrial recycled polyester	
17% post-consumer recycled polyester	
ZFC01/466073-001	Lynx
ZFC12/466073-012	Bayou
ZFC13/466073-013	Bottle
ZFC14/466073-014	Cadet
ZFC22/466073-022	Turf
ZFC24/466073-024	Steady

Price category G continued on next page

- Maharam textiles are on assigned lead times A.
- Fabric numbers are listed as Herman Miller fabric number/Maharam fabric number.

Price Category G
continued

Fold - Maharam	
Seating	
54” wide	
100% polyurethane	
Polyester backing	
ZF101/466292-001	Jet
ZF102/466292-002	Chalk
ZF103/466292-003	Smoke
ZF105/466292-005	Fatigue
ZF106/466292-006	Splash
ZF107/466292-007	Apple
ZF108/466292-008	Moss
ZF110/466292-010	Midnight

Gild - Maharam	
Ancillary/Seating	
54” wide	
100% non-phthalate vinyl	
Ink-resistant protective top coat	
Polyester backing	
8AR01/466432-005	Grapevine
8AR02/466432-009	Frosting
8AR03/466432-007	Smokey
8AR04/466432-003	Skylight
8AR05/466432-011	Sandstone
8AR06/466432-004	Hurricane
8AR07/466432-002	Wreath
8AR08/466432-001	Rainforest
8AR09/466432-012	Fudge
8AR10/466432-010	Lantern
8AR11/466432-006	Planet
8AR12/466432-008	Reflection

Pare – Maharam	
Ancillary/Seating	
54” wide	
52% wool	
26% polyester	
22% nylon	
PFOA-free stain resistant finish	
ZPR01/466359-001	Polaris
ZPR04/466359-004	Fresco
ZPR06/466359-006	Wink
ZPR07/466359-007	Concord
ZPR08/466359-008	Strawberry
ZPR09/466359-009	Solar
ZPR10/466359-010	Amulet
ZPR11/466359-011	Zest
ZPR12/466359-012	Elmwood
ZPR13/466359-013	Thyme
ZPR17/466359-017	Blueberry

Runner - Maharam	
Ancillary/Seating	
54” wide	
57% post-industrial	
recycled polyester	
43% post-consumer	
recycled polyester	
ZRF01/466108-001	Bluff
ZRF03/466108-003	Grove
ZRF04/466108-004	Starboard
ZRF05/466108-005	Plot
ZRF06/466108-006	Carousel

Sudden – Maharam	
Ancillary	
54” wide	
100% polyurethane	
ZSD02/463000-002	002
ZSD03/463000-003	003
ZSD05/463000-005	005
ZSD06/463000-006	006
ZSD07/463000-007	007
ZSD08/463000-008	008
ZSD09/463000-009	009
ZSD10/463000-010	010
ZSD11/463000-011	011
ZSD13/463000-013	013
ZSD15/463000-015	015
ZSD16/463000-016	016
ZSD17/463000-017	017
ZSD18/463000-018	018
ZSD19/463000-019	019
ZSD20/463000-020	020
ZSD24/463000-024	024
ZSD27/463000-027	027
ZSD36/463000-036	036

Price Category H

Anagram - Maharam	
Ancillary	
54” wide	
42% cotton	
32% polyester	
26% nylon	
ZAN01/466067-001	Quarry
ZAN02/466067-002	Hush
ZAN03/466067-003	Electric
ZAN04/466067-004	Range
ZAN05/466067-005	Settle

Circles — Maharam	
Ancillary/Seating	
55” wide	
70% cotton	
30% polyester	
ZT01/458310-001	Khaki
ZT02/458310-002	Fatigue
ZT03/458310-003	Document
ZT04/458310-004	Engine

Dot Pattern — Maharam	
Ancillary/Seating	
55” wide	
71% cotton	
29% polyester	
ZK01/458300-001	Document
ZK02/458300-002	Taupe
ZK04/458300-004	Red
ZK05/458300-005	Navy

Mechanism – Maharam	
Ancillary	
54” wide	
100% polyester	
ZMC01/465952-001	Mercury
ZMC10/465952-010	Pearl
ZMC11/465952-011	Bronze
ZMC13/465952-013	Titanium
ZMC15/465952-015	Tangerine
ZMC17/465952-017	Sprout

Price category H continued on next page

- Maharam textiles are on assigned lead times A.
- Fabric numbers are listed as Herman Miller fabric number/Maharam fabric number.

Price Category H
continued

Mister – Maharam
Ancillary
54” wide
67% solution-dyed acrylic
33% solution-dyed polyester

ZMG01/466178-001	Breeze
ZMG04/466178-004	Enliven
ZMG05/466178-005	Notice
ZMG06/466178-006	Azurite

Regatta – Maharam
Ancillary
54” wide
65% solution-dyed acrylic
35% solution-dyed polyester

ZRT01/466189-001	Drift
ZRT02/466189-002	Parasol
ZRT04/466189-004	Swell

Small Dot Pattern — Maharam
Ancillary/Seating
55” wide
71% cotton
29% polyester

ZL01/458320-001	Document
ZL02/458320-002	Sand
ZL03/458320-003	Khaki
ZL04/458320-004	Taupe
ZL05/458320-005	Charcoal
ZL06/458320-006	Document Reverse
ZL07/458320-007	Red
ZL08/458320-008	Yellow
ZL09/458320-009	Green

Price Category I

Colorwheel – Maharam
Ancillary
54” wide
62% cotton
38% solution-dyed
post-industrial recycled nylon

ZCW02/466163-002	Pumice
ZCW03/466163-003	Viridian
ZCW06/466163-006	Charcoal
ZCW07/466163-007	Carbon

Cursive – Maharam
Ancillary/Seating
54” wide
67% solution-dyed acrylic
33% solution-dyed polyester
PFOA-Free stain resistant

7CW01/466335-001	Fast
7CW03/466335-003	Beachcomb
7CW05/466335-005	Swift
7CW07/466335-007	Inkwell
7CW08/466335-008	Rubber

Passage - Maharam
Ancillary
54” wide
100% polyester

59P01/466614-001	Mirage
59P02/466614-002	Poolside
59P03/466614-003	Cascade
59P04/466614-004	Lacinato
59P05/466614-005	Overstory
59P06/466614-006	Celadon
59P07/466614-007	Echo
59P08/466614-008	Bentonite
59P09/466614-009	Buttercup
59P10/466614-010	Maple
59P11/466614-011	Blossom
59P12/466614-012	Cloudberry
59P13/466614-013	Contessa
59P14/466614-014	Claret
59P15/466614-015	Katana

Study - Maharam
Ancillary/Seating
54” wide
73% solution-dyed acrylic
27% solution-dyed polyester

ZSY01/466269-001	001
ZSY02/466269-002	002
ZSY03/466269-003	003
ZSY04/466269-004	004
ZSY05/466269-005	005

Tracery – Maharam
Ancillary
52” wide
34% solution-dyed nylon
26% wool
21% polyester
19% cotton
acrylic backing
PFOA-free stain resistant finish

ZT501/466372-001	Birch
ZT502/466372-002	Sterling
ZT503/466372-003	Flint
ZT504/466372-004	Indigo
ZT505/466372-005	Arctic
ZT506/466372-006	Kelp
ZT507/466372-007	Melon
ZT508/466372-008	Poppy
ZT509/466372-009	Copper
ZT510/466372-010	Papaya
ZT511/466372-011	Sepia

Price Category J

Fluted Silk – Maharam
Ancillary
54” wide
85% silk
8% cotton
7% acrylic

ZFK02/465982-002	Tarnish
ZFK05/465982-005	Calm
ZFK06/465982-006	Flaxen
ZFK10/465982-010	Noticed
ZFK11/465982-011	Moody
ZFK12/465982-012	Constant
ZFK13/465982-013	Seed
ZFK14/465982-014	Eternal
ZFK15/465982-015	Honor
ZFK17/465982-017	Cranach
ZFK20/465982-020	Discreet

Mikado – Maharam
Ancillary
54” wide
79% cotton
21% polyester

V1901/459330-001	Umber
V1902/459330-002	Orange
V1903/459330-003	Ultramarine
V1904/459330-004	Pink
V1905/459330-005	Sepia

Price category J continued on next page

- Maharam textiles are on assigned lead times A.
- Fabric numbers are listed as Herman Miller fabric number/Maharam fabric number.

Price Category J
continued

Trestle - Maharam	
Ancillary	
54” wide	
36% acrylic	
32% wool	
23% cotton	
9% polyester	
3WG01/466613-001	Loam
3WG02/466613-002	Rift
3WG03/466613-003	Fuse
3WG04/466613-004	Cumulus
3WG05/466613-005	Strand
3WG06/466613-006	Pomelo
3WG07/466613-007	Tawny
3WG08/466613-008	Sunstone
3WG09/466613-009	Kindling
3WG10/466613-010	Sidecar
3WG11/466613-011	Beak
3WG12/466613-012	Ficus
3WG13/466613-013	Hinge
3WG14/466613-014	Bluefish
3WG15/466613-015	Oblivion

Price Category K

Checker – Maharam	
Ancillary	
55” wide	
77% cotton	
23% polyester	
V1201/459830-001	Emerald Light/ Ivory
V1204/459830-004	Ultramarine/ Emerald
V1206/459830-007	Sienna Dark/ Khaki
V1207/459830-008	Black/White
V1209/459830-009	Ultramarine/ Turquoise
V1210/459830-010	Blue Gray/ Emerald
V1211/459830-011	Olive/Pink
V1212/459830-012	Magenta/ Orange
V1213/459830-013	Crimson/ Orange

Checker Split – Maharam	
Ancillary	
55” wide	
77% cotton	
23% polyester	
V1301/460290-01	Black/White

Double Triangles – Maharam	
Ancillary	
55” wide	
77% cotton	
23% polyester	
V1401/459840-001	Black/White

Facets – Maharam	
Ancillary	
55” wide	
77% cotton	
23% polyester	
V1501/459850-001	Black/White

Isa – Maharam	
Ancillary	
59” wide	
85% wool	
15% nylon	
VKZ01/466624-001	Bashful
VKZ02/466624-002	Median
VKZ03/466624-003	Observe
VKZ04/466624-004	Plains
VKZ05/466624-005	Drawn
VKZ06/466624-006	Connect
VKZ07/466624-007	Fennel
VKZ08/466624-008	Skyward
VKZ09/466624-009	Oceanic
VKZ10/466624-010	Neptune
VKZ11/466624-011	Sprint
VKZ12/466624-012	Ledge
VKZ13/466624-013	Surround
VKZ14/466624-014	Foretell
VKZ15/466624-015	Lory
VKZ16/466624-016	Dear
VKZ17/466624-017	Foxtrot
VKZ18/466624-018	Sincere
VKZ19/466624-019	Begonia

Optik – Maharam	
Ancillary	
55” wide	
76% cotton	
24% polyester	
ZQP01/459960-001	Sun Yellow/ Orange
ZQP06/459960-006	White/Black

Unisol – Maharam	
Ancillary	
55” wide	
61% rayon	
21% polyester	
18% cotton	
ZUN01/461160-001	Black/ White

Price Category L

Exaggerated Plaid – Maharam	
Ancillary	
59” wide	
100% wool	
ZEP01/466039-001	Glen
ZEP02/466039-002	Brae
ZEP03/466039-003	Firth

Geometri – Maharam	
Ancillary	
55” wide	
77% cotton	
23% polyester	
ZGM02/459970-002	Red/ Carmine
ZGM03/459970-003	Lilac/Blue
ZGM04/459970-004	White/ Black

Jacobs Coat – Maharam	
Ancillary	
54” wide	
92% wool	
8% nylon	
V1601/462270-001	Multicolored Bright *
V1602/462270-002	Multicolored Neutral

* Color available on Girard Color Wheel Ottoman.

Millerstripe – Maharam	
Ancillary	
54” wide	
92% wool	
8% rayon	
V1701/462250-001	Multicolored Bright
V1702/462250-002	Multicolored Neutral

Price category L continued on next page

- Maharam textiles are on assigned lead times A.
- Fabric numbers are listed as Herman Miller fabric number/Maharam fabric number.

Price Category L
continued

Minicheck - Maharam	
Seating	
55” wide	
78% cotton	
22% polyester	
PFOA-Free stain resistant finish	
ZMK01/466268-001	Black/ White

Monk’s Wool – Maharam	
Ancillary	
54” wide	
96% wool	
4% nylon	
ZMW01/457301-001	Tusk
ZMW03/457301-003	Slate
ZMW05/457301-005	Cherokee

Pebble Wool – Maharam	
Ancillary	
54” wide	
90% wool	
10% nylon	
ZPW01/457401-001	Birch
ZPW10/457401-010	Cottage
ZPW13/457401-013	Eggshell
ZPW14/457401-014	Whisper
ZPW15/457401-015	Ceramic
ZPW16/457401-016	Seamist
ZPW17/457401-017	Armory
ZPW18/457401-018	Glaze
ZPW19/457401-019	Cordial

Pebble Wool Multi – Maharam	
Ancillary	
54” wide	
97% wool	
3% nylon	
ZPM01/461200-001	Fawn
ZPM02/461200-002	Slate
ZPM05/461200-005	Moss
ZPM06/461200-006	Tabasco

Quatrefoil – Maharam	
Ancillary	
54” wide	
75% cotton	
25% nylon	
V2101/459350-001	Silver
V2102/459350-002	Pink
V2103/459350-003	Crimson
V2104/459350-004	Emerald
V2105/459350-005	Violet

Repeat Classic Stripe – Maharam	
Ancillary	
55” wide	
47% cotton	
27% rayon	
26% polyester	
ZRS01/462170-001	Inca
ZRS02/462170-002	Pistachio
ZRS03/462170-003	Poppy
ZRS04/462170-004	Cadet
ZRS05/462170-005	Peacock

Repeat Dot Ring – Maharam	
Ancillary	
55” wide	
75% cotton	
25% polyester	
ZRR01/462150-001	Gold
ZRR04/462150-004	Pink
ZRR05/462150-005	Coral
ZRR07/462150-007	Gold Reverse
ZRR10/462150-010	Pink Reverse
ZRR11/462150-011	Coral Reverse

Stripes - Maharam	
Ancillary	
56” wide	
92% wool	
8% nylon	
ZSP01/463980-001	001
ZSP02/463980-002	002
ZSP03/463980-003	003
ZSP04/463980-004	004
ZSP05/463980-005	005
ZSP06/463980-006	006
ZSP07/463980-007	007
ZSP08/463980-008	008
ZSP09/463980-009	009
ZSP10/463980-010	010

Toostripe – Maharam	
Ancillary	
54” wide	
92% wool	
8% nylon	
V2201/462260-001	Orange Dark/ Crimson Dark
V2202/462260-002	Black/ Raw Umber
V2203/462260-003	Ochre Dark/ Sienna

Price Category M

Fruit - Maharam	
Seating	
54” wide	
55% cotton	
32% nylon	
13% post-consumer recycled polyester	
PFOA-Free stain resistant finish	
Acrylic backing	
ZF201/466262-001	Opal
ZF202/466262-002	Lime
ZF203/466262-003	Olive
ZF204/466262-004	Sky
ZF207/466262-007	Russet

Names – Maharam	
Ancillary	
55” wide	
73% cotton	
27% polyester	
V1801/462510-001	Crimson On White
V1802/462510-002	Ultramarine On White
V1803/462510-003	Black On White

Price category M continued on next page

- Maharam textiles are on assigned lead times A.
- Fabric numbers are listed as Herman Miller fabric number/Maharam fabric number.

Price Category M
continued

Ottoman Stripe – Maharam	
Ancillary	
58” wide	
92% wool	
8% nylon	
ZQN01/466142-001	Brass
ZQN02/466142-002	Cocoa
ZQN03/466142-003	Dusk
ZQN04/466142-004	Pistachio
ZQN05/466142-005	Apricot

Pressed Plaid – Maharam	
Ancillary	
54” wide	
100% wool	
T1101/466181-001	001
T1102/466181-002	002
T1103/466181-003	003
T1104/466181-004	004
T1105/466181-005	005
T1106/466181-006	006

Wool Striae – Maharam	
Ancillary	
54” wide	
100% wool	
T1201/466184-001	001
T1202/466184-002	002
T1203/466184-003	003
T1204/466184-004	004
T1205/466184-005	005
T1206/466184-006	006
T1207/466184-007	007

Price Category N

Alpaca Epinglé - Maharam	
Ancillary	
55” wide	
100% alpaca	
ZAE01/465902-001	Vellum
ZAE02/465902-002	Slate
ZAE06/465902-006	Graphite
ZAE07/465902-007	Beignet

Alpaca Velvet - Maharam	
Ancillary	
54” wide	
100% alpaca	
ZAV01/465901-001	Alpine
ZAV06/465901-006	Charcoal
ZAV07/465901-007	Pewter
ZAV08/465901-008	Squash
ZAV09/465901-009	Wallaby
ZAV10/465901-010	Brunia

Bespoke Stripe - Maharam	
Ancillary	
56” wide	
100% wool	
ZBP01/463540-001	Navy
ZBP02/463540-002	Tobacco
ZBP03/463540-003	Chocolate
ZBP04/463540-004	Charcoal
ZBP05/463540-005	Black
ZBP06/463540-006	Pewter

Herringbone Stripe - Maharam	
Ancillary	
57” wide	
100% wool	
ZKP01/465945-001	Granite
ZKP02/465945-002	Espresso
ZKP03/465945-003	Graphite
ZKP04/465945-004	Indigo
ZKP05/465945-005	Raven

Point – Maharam	
Ancillary	
53” wide	
97% rayon	
3% nylon	
ZPT01/466090-001	Ivory and Ember
ZPT02/466090-002	Black and Coral
ZPT03/466090-003	Slate and Khaki
ZPT04/466090-004	Black and Cobalt
ZPT05/466090-005	Black and Khaki
ZPT06/466090-006	Slate and Mandarin
ZPT07/466090-007	Slate and Black
ZPT08/466090-008	Brick and Greige
ZPT09/466090-009	Gold and Black
ZPT10/466090-010	Greige and Peat
ZPT11/466090-011	Peat and Mandarin
ZPT12/466090-012	Crimson
ZPT13/466090-013	Mandarin
ZPT14/466090-014	Citrus
ZPT15/466090-015	Grass
ZPT16/466090-016	Cyan
ZPT17/466090-017	Cobalt

Wool Velvet - Maharam	
Ancillary	
54” wide	
100% wool	
ZWV01/466120-001	Plush
ZWV02/466120-002	Subdue
ZWV03/466120-003	Flagstone
ZWV04/466120-004	Nori
ZWV06/466120-006	Bridle
ZWV07/466120-007	Covert
ZWV08/466120-008	Gateway

Price Category O

Bavaria Stripe – Maharam	
Ancillary	
55” wide	
77% polyester	
23% cotton	
ZBS02/466161-002	Unique

- Maharam textiles are on assigned lead times. A
- Fabric numbers are listed as Herman Miller fabric number/Maharam fabric number.

Price Category P

Big Stripe – Maharam

Ancillary
55” wide
92% wool
8% nylon

ZBR01/466174-001	Peacock
ZBR02/466174-002	Spring
ZBR03/466174-003	Umber
ZBR04/466174-004	Poppy
ZBR05/466174-005	Cobalt

Epinglé Stripe - Maharam

Ancillary
50” wide
100% cotton

ZES01/466007-001	Caramel
ZES02/466007-002	Lead
ZES03/466007-003	Violet
ZES04/466007-004	Mahogany
ZES05/466007-005	Olive

Layers Garden – Maharam

Ancillary
52” wide
96% wool
3% nylon
1% polyester

ZLY01/465916-001	Ivy/Bronze
ZLY02/465916-002	Putty/ Turquoise
ZLY03/465916-003	Pewter/ White
ZLY04/465916-004	Chocolate/ Lilac
ZLY05/465916-005	Peat/Copper

Layers Park – Maharam

Ancillary
52” wide
95% wool
3% nylon
2% polyester

ZLP01/465918-001	Ash/Snow
ZLP02/465918-002	Mineral/Sky
ZLP03/465918-003	Poppy/ Melon
ZLP04/465918-004	Indigo/ White
ZLP05/465918-005	Earth/Cobalt

Layers Vineyard Large – Maharam

Ancillary
52” wide
95% wool
3% nylon
2% polyester

ZLV01/465921-001	Ivory/Onyx
ZLV02/465921-002	Slate/Azure
ZLV03/465921-003	Loden/Sky
ZLV04/465921-004	Taupe/ Crimson
ZLV05/465921-005	Black/ Mahogany

Layers Vineyard Small – Maharam

Ancillary
52” wide
92% wool
5% polyester
3% nylon

ZLS01/465920-001	Ochre/White
ZLS02/465920-002	Scarlet/ Peony
ZLS03/465920-003	Taupe/Violet
ZLS04/465920-004	Jade/ Turquoise
ZLS05/465920-005	Ginger/Rose

Mohair Supreme - Maharam

Ancillary
54” wide
100% mohair

ZMS02/451801-072	Stonehenge
ZMS06/451801-112	Slate *
ZMS07/451801-113	Rich Chocolate *
ZMS09/451801-126	Cayenne
ZMS10/451801-127	Cognac
ZMS12/451801-129	Peat *
ZMS15/451801-133	Abyss
ZMS16/451801-134	Intrigue
ZMS18/451801-136	Lupine *
ZMS28/451801-146	League
ZMS29/451801-147	Armory *
ZMS32/451801-150	Capiz
ZMS33/451801-151	Underneath
ZMS34/451801-152	Crescent
ZMS35/451801-153	National
ZMS36/451801-154	Rooftop
ZMS37/451801-155	Skewer
ZMS38/451801-156	Party
ZMS39/451801-157	Keepsake
ZMS40/451801-158	Travel
ZMS41/451801-159	Estate
ZMS42/451801-160	Grassland
ZMS43/451801-161	Limoncello
ZMS44/451801-162	Mango
ZMS45/451801-163	Doll
ZMS46/451801-164	Carousel
ZMS47/451801-165	Palette
ZMS48/451801-166	Brandy
ZMS49/451801-167	Aristocrat
ZMS50/451801-168	Soulmate
ZMS51/451801-169	Rosette
ZMS52/451801-170	Aviator
ZMS53/451801-171	Penny

* Colors available on Eames Lounge Chair and Ottoman.

Price Category Q

A Band Apart – Maharam

Ancillary
56” wide
75% polyester
25% cotton

ZAB01/466000-001	Unique

Brushed Camel – Maharam

Ancillary
58” wide
100% baby camel hair

ZBA01/465977-001	Albino
ZBA02/465977-002	Natural

Deconstructed Rose – Maharam

Ancillary
55” wide
65% polyester
32% cotton
3% rayon

ZDS01/466086-001	Golden
ZDS02/466086-002	Vivid
ZDS03/466086-003	Earthen

Massive Paisley – Maharam

Ancillary
57” wide
76% polyester
24% cotton

ZMV01/465915-001	Ash
ZMV03/465915-003	Cardinal
ZMV06/465915-006	Night

The Firm – Maharam

Ancillary
56” wide
75% polyester
25% cotton

ZTF03/465999-003	Unique

- Maharam textiles are on assigned lead times. A
- Fabric numbers are listed as Herman Miller fabric number/Maharam fabric number.

Price Category R

Borders – Maharam
Ancillary
53” wide
98% wool
2% polyester
ZBB01/466082-001 Natural
ZBB02/466082-002 Greige
ZBB03/466082-003 Charcoal
ZBB04/466082-004 Walnut

Stow Leather - Maharam
Ancillary
approx. 50 sq. ft. per hide
100% leather
protective top coat
ZSV01/700014-001 Opera
ZSV02/700014-002 Japonica
ZSV03/700014-003 Masquerade
ZSV04/700014-004 Laguna
ZSV05/700014-005 Jettison
ZSV06/700014-006 Razor
ZSV07/700014-007 Holiday
ZSV08/700014-008 Patchouli
ZSV09/700014-009 Macrame
ZSV10/700014-010 Grace
ZSV11/700014-011 Seraphim
ZSV12/700014-012 Ricotta
ZSV13/700014-013 Neroli
ZSV14/700014-014 Sultana
ZSV15/700014-015 Sundance
ZSV16/700014-016 Quince
ZSV17/700014-017 Babka
ZSV18/700014-018 Maitake
ZSV19/700014-019 Mercer
ZSV20/700014-020 Gaucho
ZSV21/700014-021 Chia
ZSV22/700014-022 Vanguard
ZSV23/700014-023 Zone
ZSV24/700014-024 Zeppelin

Stow Leather *continued*
ZSV25/700014-025 Clandestine
ZSV26/700014-026 Raven
ZSV27/700014-027 Cabana
ZSV28/700014-028 Rime
ZSV29/700014-029 Forsythia
ZSV30/700014-030 Panthera
ZSV31/700014-031 Dune
ZSV32/700014-032 Madera
ZSV33/700014-033 Russet
ZSV34/700014-034 Gala
ZSV35/700014-035 Heron

Price Category S

Bavaria – Maharam
Ancillary
55” wide
73% polyester
27% cotton
ZBV01/466162-001 Unique

Price Category T

All Grain Leather – Edelman	
Ancillary	
approx. 50 sq. ft. per hide	
100% full-grain Aniline-dye cowhide	
VB01/AG01	Pitch Brown
VB02/AG02	White
VB03/AG03	Cloud
VB04/AG04	Shadow
VB05/AG05	Black
VB06/AG06	Baked Bean
VB07/AG07	Mildew
VB08/AG08	Soot
VB09/AG09	Blue Jeans
VB10/AG10	Merlot
VB11/AG11	Nutmeg
VB12/AG12	Butter
VB13/AG13	Cherry
VB14/AG14	Burnt Orange
VB15/AG15	Whiskey
VB17/AG17	Raw Silk
VB18/AG18	Balsa
VB19/AG19	Naturale
VB21/AG21	Greige
VB22/AG27	Latte
VB23/AG28	Coral
VB24/AG29	Rose
VB25/AG30	Zinnia
VB26/AG31	Iris
VB27/AG32	Daffodil

Hours – Maharam
Ancillary
56” wide
95% wool
3% nylon
2% rayon
ZKR01/466092-001 Day
ZKR02/466092-002 Night

- Maharam textiles are on assigned lead times. A
- Fabric numbers are listed as Herman Miller fabric number/Maharam fabric number.

Price Category U

Layers Garden Double – Maharam	
Ancillary	
52” wide	
96% wool	
3% nylon	
1% polyester	
ZLD01/465917-001	Ash/ Quartz/ Grass
ZLD02/465917-002	Earth/ Chocolate/ Coral
ZLD03/465917-003	Black/ Navy/ Cobalt

Layers Park Double – Maharam	
Ancillary	
52” wide	
96% wool	
3% nylon	
1% polyester	
ZLB01/465919-001	Mineral/ Taupe/ Lemon
ZLB02/465919-002	Sienna/ Ginger/ Rose
ZLB03/465919-003	Black/ Peat/ Copper

Price Category V-W

No fabrics available at this time.

Price Category X

Eden – Maharam	
Ancillary	
56” wide	
83% polyester	
17% cotton	
ZED01/466258-001	001
ZED02/466258-002	002
ZED03/466258-003	003
ZED04/466258-004	004
ZED05/466258-005	005

Foliage – Maharam	
Ancillary	
56” wide	
75% polyester	
25% cotton	
ZFG02/466257-002	002
ZFG04/466257-004	004
ZFG05/466257-005	005

Price Category Y

Industry – Maharam	
Ancillary	
55” wide	
80% polyester	
20% cotton	
ZND01/466255-001	001

- Maharam textiles are on assigned lead times. A
- Fabric numbers are listed as Herman Miller fabric number/Maharam fabric number.

Price Category Z

Agency – Maharam	
Ancillary	
55” wide	
75% polyester	
25% cotton	
ZAG02/466001-002	002
ZAG04/466001-004	004
ZAG05/466001-005	005
ZAG06/466001-006	006
ZAG07/466001-007	007
ZAG08/466001-008	008

Price Category 10M

Pace Leather – Maharam	
Ancillary	
approx. 50 sq. ft. per hide	
100% leather	
ZPA01/700011-001	Whisper
ZPA02/700011-002	Shy
ZPA03/700011-003	Granite
ZPA04/700011-004	Misty
ZPA05/700011-005	Studio
ZPA06/700011-006	Throne
ZPA07/700011-007	Proper
ZPA08/700011-008	Huron
ZPA09/700011-009	Darkroom
ZPA10/700011-010	Bark
ZPA11/700011-011	Raspberry
ZPA12/700011-012	Sangria
ZPA13/700011-013	Admiral
ZPA14/700011-014	Juniper
ZPA15/700011-015	Regal
ZPA16/700011-016	Vapor
ZPA17/700011-017	Valley
ZPA18/700011-018	Bushel
ZPA19/700011-019	Heirloom
ZPA20/700011-020	Palomino
ZPA21/700011-021	Bamboo
ZPA22/700011-022	Saffron
ZPA23/700011-023	Tearose
ZPA24/700011-024	Canyon
ZPA25/700011-025	Bistro
ZPA26/700011-026	Toffee
ZPA27/700011-027	Rodeo
ZPA28/700011-028	Mudslide
ZPA29/700011-029	Greige
ZPA30/700011-030	Reflection
ZPA31/700011-031	Pure
ZPA32/700011-032	Desert
ZPA33/700011-033	Griffin
ZPA34/700011-034	Urbane
ZPA35/700011-035	Woodrose

- Maharam textiles are on assigned lead times. A
- Fabric numbers are listed as Herman Miller fabric number/Maharam fabric number.

For more information about our products and services or to see a list of dealers, please visit us at HermanMiller.com or call (800) 851 1196.

© 2025 Herman Miller, Inc., Zeeland, Michigan

Distribution Rights

Working together since 1956, Herman Miller and Vitra are the authentic sources of designs by Charles and Ray Eames, Alexander Girard, and George Nelson. All the designs shown in this book are protected by law. Herman Miller has obtained all rights to make and sell these designs. Also, Herman Miller holds exclusive worldwide manufacturing and distribution rights for these products with the following exceptions:

Charles and Ray Eames, George Nelson, and Alexander Girard—Worldwide distribution rights for furniture in all areas except Europe and the Middle East. For those areas, please contact Vitra.

Isamu Noguchi—Worldwide distribution rights for the Noguchi Rudder Table. Distribution rights for the Noguchi Table in North America and Central America only. For all other areas, please contact Vitra.

Magis—Exclusive distribution rights in the US and Canada. For all other areas, please contact Magis.

® HermanMiller, ●, 3D Intelligent, 8Z Pellicle, AO, Action Office, Aeron, Aside, Bubble Lamps, Canvas Office Landscape, Caper, Celle, Cosm, Co/Struc, Daisyone, Distil, Eames, Eco-Dematerialized, Embody, Envelop, Ethospace, Exclave, Fine-Tune, FlexFront, Flo, Formcoat, Formwork, Ground Cloth, Intent, Kinemat, Layout Studio, Lino, Live Unframed, Living Office, Maharam, Meridian, Mirra, Motia, Nelson, Pari, Pellicle, Perspectives, Plex, PostureFit, PostureFit SL, Public Office Landscape, Sayl, Setu, Striad, Tu, Ubi, Verus, Wishbone, Y-Tower and Zeph are among the registered trademarks of Herman Miller, Inc., and its owned subsidiaries.

™ About Face, AireWeave, Airia, Ambit, Asari Chair by HermanMiller, Backfit, Bubbletack, Burdick Group, Butterfly Back, Canvas Vista, Cellular Suspension, Commend, Compass, Connect, DOT, Duracare, Durawrap, EnhancedAccess, Everywhere, Flex-Edge, Flute, Harmonic, Headway, Herman Miller Select, Hopsak 2, Iota, Keyless Entry, Latitude, Logic Mini, Logic Power Access Solutions, Lyris, Lyris 2, Made-to-Measure Storage, Mora, Multiscrim, Nevi, OE1, OE1 Workspace Collection, Overlay, Pixelated Support, Pronta, Renew, Sense, Soft Pad, Stackable, Stackable Storage, Swoop, Thrive, Tone, TriFlex, Twist and Wireframe are among the trademarks of Herman Miller, Inc., and its owned subsidiaries.

SM Herman Miller Options is among the service marks of Herman Miller, Inc.

AAP™ is a trademark of Extron Electronics.

Alexander Girard® is a registered trademark of The Alexander Girard Estate.

Chemsurf® is a registered trademark of Wilsonart International.

Corian® is a registered trademark of E. I. du Pont de Nemours and Company Corporation.

Crypton® is a registered trademark of Crypton, Inc.

DACRON® is a registered trademark of INVISTA S.a r.l.

Danzer® is a registered trademark of Danzer Holding AG.

Decora® is a registered trademark of Leviton Manufacturing Co., Inc.

Edelman® Leather is a registered trademark of Edelman Leather, Inc.

Extron® is a registered trademark of RGB Systems, Inc.

FENIX NTM® is a registered trademark of Arpa Industriale S.p.A.

FLEXNET™ is a trademark of Milliken & Company.

Floor Saver Glide® is a registered trademark of Carpin Manufacturing, Inc.

Forest Stewardship Council® is a registered trademark of the Forest Stewardship Council A.C. (FSC). We are FSC® certified (FSC® C102895).

FSC® is a registered trademark of the Forest Stewardship Council A.C. (FSC).

Geiger® is a registered trademark, and Bumper™, Saiba™, and Ward Bennett™ are trademarks, of Geiger International.

Hang-It-All® is a registered trademark of Lucia Eames Demetrios, d.b.a. Eames Office.

Holophane® is a registered trademark of Holophane.

Ingeo™ is a trademark of Cargill Dow LLC.

iPad® and Mac mini® are registered trademarks of Apple Inc.

Leviton® is a registered trademark of Leviton Manufacturing Co., Inc.

LifeSize® is a registered trademark of LifeSize Communications, Inc.

Lisocore® is a registered trademark of Pyrus Panels GmbH.

Logitech G® is a registered trademark of Logitech International S.A.

Magis®, Bombo®, and Me Too® are registered trademarks of Magis S.p.A.

MicrobeCare™ is a trademark of Parasol Medical LLC.

Microsoft® and Natural® Keyboard are registered trademarks of Microsoft Corporation.

Noguchi® and the Noguchi table configuration (trade dress) are registered trademarks, and Rudder Table™ is a trademark, of The Isamu Noguchi Foundation and Garden Museum.

Place Textiles® is a registered trademark of Place Textiles.

Sunbrella® is a registered trademark of Glen Raven, Inc.

SuperSeat™ is a trademark of Dahti Seating, a division of ITW.

Valor™ is among the trademarks owned by Nemschoff, Inc.