TOGGLE®
HEIGHT-ADJUSTABLE TABLES

PRICE LIST

EFFECTIVE APRIL 2, 2025
800.424.2432

Contents

Refer to KI Terms & Conditions document or visit ki.com.

Contents

Refer to KI Terms & Conditions document or visit ki.com.

Toggle® Tables
- Technical Specifications 3
- Product Color Options 13

Toggle® T-Leg Tables
- Fixed Base 14
- Dual Motor Electric Base 15
- Dual Motor Electric-Bases Only 16

Toggle® C-Leg Tables
- Dual Motor Electric Base 17
- Dual Motor Electric-Bases Only 18

Toggle® Square Shoe Tables
- Triple Motor Electric Base 19
- Triple Motor Electric-Bases Only 20

Toggle® Tables
- Accessories 21

PRODUCT SPECIFICATIONS

Toggle™ Tables
Models EL, ELC, SS & FX

July 2024

TECHNICAL SPECIFICATIONS

Toggle Dual & Triple Motor Electric-Base (Model EL, ELC & SS)

General
The Model EL table consists of two adjustable height T-bases (centered column on a horizontal foot). The Model ELC table consists of two adjustable height C-Bases (off centered column on a horizontal foot). Bases attach to a tabletop support that spans the two bases. The Model SS table consists of three adjustable height C-Bases (off centered column on a horizontal foot). Bases attach to the tabletop support that spans the three bases. All tabletops adjusts between 25" and 51" from the floor by means of electric controls that can be located at either end of the table.

Base
The base consists of a column assembly and foot both finished with baked-on 30-sheen powder-coat paint. The column assembly consists of an outer member, an intermediate member and an inner member. The outer member consists of a $2^3/_8$" x $4^3/_8$" rectangular 14-gauge steel tubing with a $^1/_4$" steel plate welded on the top end. The intermediate member consists of a 2" x 4" rectangular 14-gauge steel tubing. The inner member consists of a $1^1/_2$" x $3^1/_2$" rectangular 14-gauge steel tubing with a $^1/_4$" steel plate welded on the bottom end. A 6-gauge formed steel motor housing is welded to each outer leg member for strength. The foot consists of an extruded aluminum component with a nylon toe cap inserted into each end. The foot is attached to the column with four 6 mm bolts. Two $1^1/_2$" diameter nylon base leveling glides are threaded into the foot.

Tabletop Support
The tabletop support consists of a 14-gauge 1" x 1" steel tubing attached to each leg column with 6 mm bolts. An 11-gauge U-shaped cross member connects each leg assembly for stability.

Tabletop
Tabletops are constructed with $1^1/_8$" thick 45 lb density particleboard core. The top surface is covered with high-pressure laminate. The bottom surface is covered with a phenolic backing sheet. The perimeter is finished using high-impact plastic edging. Model EL and ELC tabletops are pre-drilled and attached to the bases using eight M5.5 x 22 pan head screws. Model SS tabletops are pre-drilled and attached to the bases using sixteen M5.5 x 22 pan head screws.

Control Box
Tables ship standard with a compact corded two-button remote control switch. This allows two switch options for every customer. All table control switches come standard with programmable container/shelf stop, and ISP (Intelligent System Protection). The stand-by power consumption is 0.3 watts. Refer to "Toggle Control Unit Product Specifications" (KI-62686) for more details.

Wire Trough
The wire trough is an optional accessory which must be ordered separately. Constructed of 18-gauge steel with a powder-coated finish which may be coordinated to match the color of table legs. Screws are provided for attachment to the underside of the tabletop, and tops are pre-drilled for wire trough locations. Provides six access holes to feed wires or install cable management systems.

Polyester Felt Modesty Panel
Modesty panels are constructed from a sound-absorbing, 100% polyester felt. The panels have a density of 0.5 lb/ft^2 and is sound absorbing tested to ASTM C423 with an NRC rating of .44 when using no air gap (A Mount testing method) and an NRC rating of .81" with 2" air gap. The polyester felt is in accordance with ASTM-E84 and achieve a Class A Flame Spread. Standard sizes are $9^1/_4$" high by $46^1/_2$", $52^1/_2$", $58^1/_2$", $64^1/_2$", $70^1/_2$" and $82^1/_2$" wide.

Mounting Hooks
The mounting hooks are 18-gauge steel and attach underneath the tabletop using two steel screws. Panels $46^1/_2$" wide use two hooks per panel. Panels $52^1/_2$", $58^1/_2$", $64^1/_2$", $70^1/_2$" and $82^1/_2$" wide use three hooks per panel.

TECHNICAL SPECIFICATIONS

Dual Motor T-Leg Electric-Base Table Operating Capacity Chart

Model Number	Operating Load Capacity
TOGL2448EL	220 lb
TOGL2454EL	215 lb
TOGL2460EL	210 lb
TOGL2466EL	205 lb
TOGL2472EL	200 lb
TOGL3048EL	210 lb
TOGL3054EL	205 lb
TOGL3060EL	200 lb
TOGL3066EL	$192^1/_2$ lb
TOGL3072EL	185 lb
TOGL3648EL	200 lb
TOGL3654EL	$192^1/_2$ lb
TOGL3660EL	185 lb
TOGL3666EL	$177^1/_2$ lb
TOGL3672EL	170 lb
TOGLC3048ELC	180 lb

Dual Motor C-Leg Electric-Base Table Operating Capacity Chart

Model Number	Operating Load Capacity
TOGL2448ELC	220 lb
TOGL2454ELC	215 lb
TOGL2460ELC	210 lb
TOGL2466ELC	205 lb
TOGL2472ELC	200 lb
TOGL3048ELC	210 lb
TOGL3054ELC	205 lb
TOGL3060ELC	200 lb
TOGL3066ELC	$192^1/_2$ lb
TOGL3072ELC	185 lb
TOGL3648ELC	200 lb
TOGL3654ELC	$192^1/_2$ lb
TOGL3660ELC	185 lb
TOGL3666ELC	$177^1/_2$ lb
TOGL3672ELC	170 lb
TOGLC3048ELC	180 lb

Triple Motor C-Leg Electric-Base Square Shoe Table Operating Capacity Chart

Model Number	Operating Load Capacity
TOGLSS244860	260 lb
TOGLSS244866	255 lb
TOGLSS244872	250 lb
TOGLSS244884	240 lb
TOGLSS246048	260 lb
TOGLSS246648	255 lb
TOGLSS247248	250 lb
TOGLSS248448	240 lb
TOGLSS304860	250 lb
TOGLSS304866	245 lb
TOGLSS304872	235 lb
TOGLSS304884	225 lb
TOGLSS306048	250 lb
TOGLSS306648	245 lb
TOGLSS307248	235 lb
TOGLSS308448	225 lb

TECHNICAL SPECIFICATIONS

Toggle Fixed-Base (Model FX)

General
The table consists of two T-bases (centered column on a horizontal foot) supporting a tabletop. The top of the tabletop is 29" from the floor. See page 11 for top sizes.

Base
The base consists of a top plate, column and foot all finished with baked-on 30-sheen powder-coat paint. The top plate is 6-gauge thick steel. The column consists of a $2^3/_8$" x $4^3/_8$" rectangular 14-gauge steel tubing with a $^1/_4$" thick steel plate welded on the bottom and top end. The top plate is attached to the column with four 6 mm bolts. The foot consists of an extruded aluminum component with a nylon toe cap inserted into each end. The foot is attached to the column with four 6 mm bolts. Two $1^1/_2$" diameter nylon base leveling glides are threaded into the foot.

Tabletop
Tabletops are constructed with $1^1/_8$" thick 45 lb density particleboard core. The top surface is covered with high-pressure laminate. The bottom surface is covered with a phenolic backing sheet. The perimeter is finished using high impact plastic edging. The tabletop is pre-drilled and attached to each mounting plate using seven #10 x 1" tapping screws.

Wire Trough
The wire trough is an optional accessory which must be ordered separately. Constructed of 18-gauge steel with a powder-coated finish which may be coordinated to match the color of table legs. Screws are provided for attachment to the underside of the tabletop, and tops are pre-drilled for wire trough locations.

Polyester Felt Modesty Panel
Modesty panels are constructed from a sound-absorbing, 100% polyester felt. The panels have a density of 0.5 lb/ft^2 and is sound absorbing tested to ASTM C423 with an NRC rating of .44 when using no air gap (A Mount testing method) and an NRC rating of .81" with 2" air gap. The polyester felt is in accordance with ASTM-E84 and achieve a Class A Flame Spread. Standard sizes are $9^1/_4$" high by $46^1/_2$", $52^1/_2$", $58^1/_2$", $64^1/_2$", $70^1/_2$" and $82^1/_2$" wide.

Mounting Hooks
The mounting hooks are 18-gauge steel and attach underneath the tabletop using two steel screws. Panels $46^1/_2$" wide use two hooks per panel. Panels $52^1/_2$", $58^1/_2$", $64^1/_2$", $70^1/_2$" and $82^1/_2$" wide use three hooks per panel.

Toggle® Tables
Technical Specifications

TECHNICAL SPECIFICATIONS

Wire Trough Placement on Dual Motor Electric-Base Tables (Model EL & ELC)
For Dual Motor Electric-Base Tables, an optional wire trough can be mounted directly over the cross support tubes. For 36" deep rectangular tables and 120-degree tables, the optional wire trough may also be mounted behind the cross support tubes if desired.

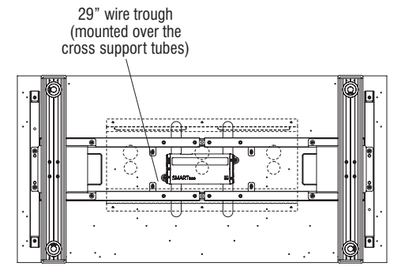

Rectangular Dual Motor Electric-Base Tables, 24"-36" Deep (24" x 48" Model EL shown)

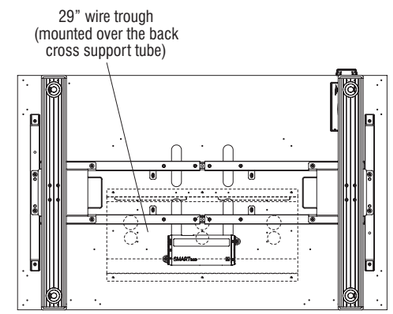

Rectangular Dual Motor Electric-Base Tables, 30"-36" Deep (30" x 48" Model EL shown)

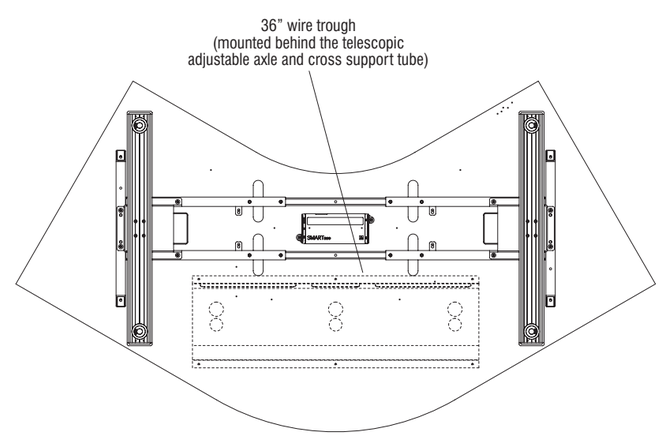

120° Dual Motor Electric-Base Tables, 30" Deep (30" x 48" Model CELC shown)

TECHNICAL SPECIFICATIONS

Wire Trough Placement on Fixed-Base Tables (Model FX)

For 60" and 72" wide Fixed-Base Tables, an optional wire trough can be mounted centered or along the rear edge of the tabletop. The optional wire troughs are not available for 48" wide rectangular tables due to insufficient clearance between the leg mounting plates.

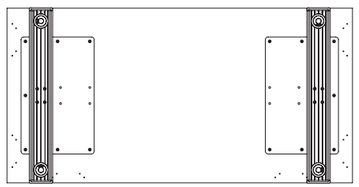

Rectangular Fixed-Base Tables,
48" Wide (24" x 48" Model FX shown)

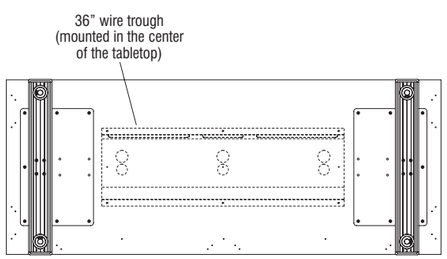

Rectangular Fixed-Base Tables,
60"-72" Wide (24" x 60" Model FX shown)

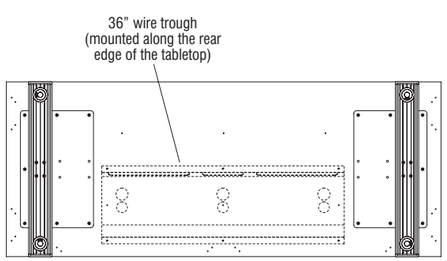

Rectangular Fixed-Base Tables,
60"-72" Wide (24" x 60" Model FX shown)

TECHNICAL SPECIFICATIONS

Wire Trough Placement on Triple Motor Electric-Base Tables (Model SS)

For Triple Motor Electric-Base Tables, an optional wire trough can be mounted directly over the cross support tubes on the left- and right-hand side of the table. Reference the chart below to specify wire troughs for all applicable Triple Motor Electric-Base Table models. The tabletops below will have appropriate pre-drilled holes to accept the wire trough listed.

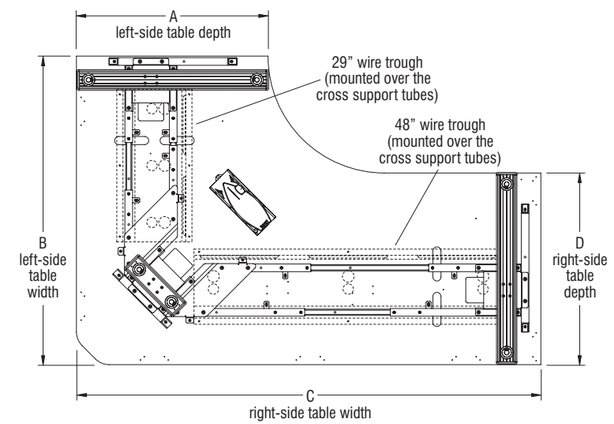

Square Shoe Triple Motor Electric-Base Tables,
(30" x 48" x 72" Model SS shown)

Triple Motor C-Leg Electric-Base Square Shoe Table Wire Trough Chart

Model Number	Left-Side Wire Trough	Right-Side Wire Trough
TOGLSS244860	24"	36"
TOGLSS244866	24"	36"
TOGLSS244872	24"	48"
TOGLSS244884	24"	48"
TOGLSS246048	36"	24"
TOGLSS246648	36"	24"
TOGLSS247248	48"	24"
TOGLSS248448	48"	24"
TOGLSS304860	24"	36"
TOGLSS304866	24"	36"
TOGLSS304872	24"	48"
TOGLSS304884	24"	48"
TOGLSS306048	36"	24"
TOGLSS306648	36"	24"
TOGLSS307248	48"	24"
TOGLSS308448	48"	24"

Toggle® Tables
Technical Specifications

TECHNICAL SPECIFICATIONS

Universal Height-Adjustable Screen on Triple Motor Electric-Base Tables (Model SS)

Reference chart below to specify the privacy screens for all applicable Triple Motor Electric-Base Table models. The tabletops below will have appropriate pre-drilled holes to accept the Universal Height-Adjustable Privacy Screen Model listed.

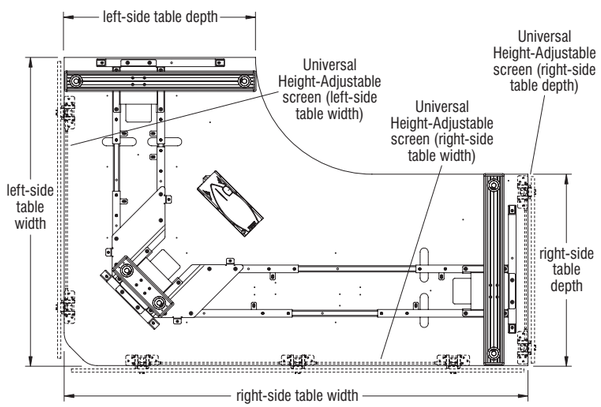

Square Shoe Triple Motor Electric-Base Tables, (30" x 48" x 72" Model SS shown)

Triple Motor C-Leg Electric-Base Square Shoe Table Universal Height-Adjustable Screen Chart

Model Number	Left-Side Table Depth Universal Height-Adjustable Screen	Right-Side Table Depth Universal Height-Adjustable Screen	Left-Side Table Width Universal Height-Adjustable Screen	Right-Side Table Width Universal Height-Adjustable Screen
TOGLSS244860	NA	USPF2324	USPF4624	USPF5824
TOGLSS244866	NA	USPF2324	USPF4624	USPF6424
TOGLSS244872	NA	USPF2324	USPF4624	USPF7024
TOGLSS244884	NA	USPF2324	USPF4624	USPF8224
TOGLSS246048	USPF2324	NA	USPF5824	USPF4624
TOGLSS246648	USPF2324	NA	USPF6424	USPF4624
TOGLSS247248	USPF2324	NA	USPF7024	USPF4624
TOGLSS248448	USPF2324	NA	USPF8224	USPF4624
TOGLSS304860	NA	USPF2924	USPF4624	USPF5824
TOGLSS304866	NA	USPF2924	USPF4624	USPF6424
TOGLSS304872	NA	USPF2924	USPF4624	USPF7024
TOGLSS304884	NA	USPF2924	USPF4624	USPF8224
TOGLSS306048	USPF2924	NA	USPF5824	USPF4624
TOGLSS306648	USPF2924	NA	USPF6424	USPF4624
TOGLSS307248	USPF2924	NA	USPF7024	USPF4624
TOGLSS308448	USPF2924	NA	USPF8224	USPF4624

DIMENSIONS - Dual Motor T-Leg Electric-Base Table (Model EL)

Statement of Line Measurements											
Dimension	Model Number	A Table Depth	B Table Width	C Between Legs	D Between Feet	E Tabletop-to-Leg	F Tabletop-to-Foot	G Tabletop-to-Support	H Foot Size	I Front Edge of Worksurface-to-Leg	J Back Edge of Worksurface-to-Leg
24 x 48"	TOGL2448EL	23.5"	46.5"	35"	33.31"	3.84"	3.45"	1.60"	23.625"	12.9"	12.9"
24 x 54"	TOGL2454EL	23.5"	52.5"	41"	39.31"	3.84"	3.45"	1.60"	23.625"	12.9"	12.9"
24 x 60"	TOGL2460EL	23.5"	58.5"	47"	45.31"	3.84"	3.45"	1.60"	23.625"	12.9"	12.9"
24 x 66"	TOGL2466EL	23.5"	64.5"	53"	51.31"	3.84"	3.45"	1.60"	23.625"	12.9"	12.9"
24 x 72"	TOGL2472EL	23.5"	70.5"	59"	57.31"	3.84"	3.45"	1.60"	23.625"	12.9"	12.9"
30 x 48"	TOGL3048EL	29.5"	46.5"	35"	33.31"	3.84"	3.45"	1.60"	29.625"	15.9"	15.9"
30 x 54"	TOGL3054EL	29.5"	52.5"	41"	39.31"	3.84"	3.45"	1.60"	29.625"	15.9"	15.9"
30 x 60"	TOGL3060EL	29.5"	58.5"	47"	45.31"	3.84"	3.45"	1.60"	29.625"	15.9"	15.9"
30 x 66"	TOGL3066EL	29.5"	64.5"	53"	51.31"	3.84"	3.45"	1.60"	29.625"	15.9"	15.9"
30 x 72"	TOGL3072EL	29.5"	70.5"	59"	57.31"	3.84"	3.45"	1.60"	29.625"	15.9"	15.9"
36 x 48"	TOGL3648EL	35.5"	46.5"	35"	33.31"	3.84"	3.45"	1.60"	29.625"	18.9"	18.9"
36 x 54"	TOGL3654EL	35.5"	52.5"	41"	39.31"	3.84"	3.45"	1.60"	29.625"	18.9"	18.9"
36 x 60"	TOGL3660EL	35.5"	58.5"	47"	45.31"	3.84"	3.45"	1.60"	29.625"	18.9"	18.9"
36 x 66"	TOGL3666EL	35.5"	64.5"	53"	51.31"	3.84"	3.45"	1.60"	29.625"	18.9"	18.9"
36 x 72"	TOGL3672EL	35.5"	70.5"	59"	57.31"	3.84"	3.45"	1.60"	29.625"	18.9"	18.9"
30 x 48"	TOGLC3048ELC	44.16"	80.5"	47"	45.31"	14.86"	14.47"	12.62"	29.625"	16.33"	23.49"

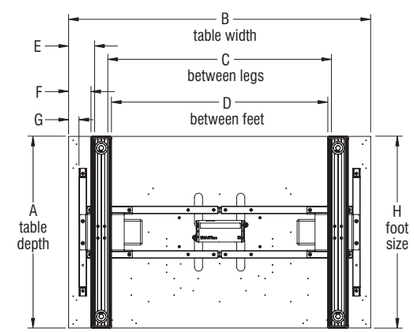

Rectangular Dual Motor T-Leg Electric-Base Table

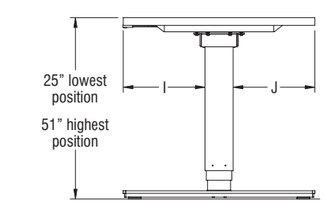

Rectangular Dual Motor T-Leg Electric-Base Table

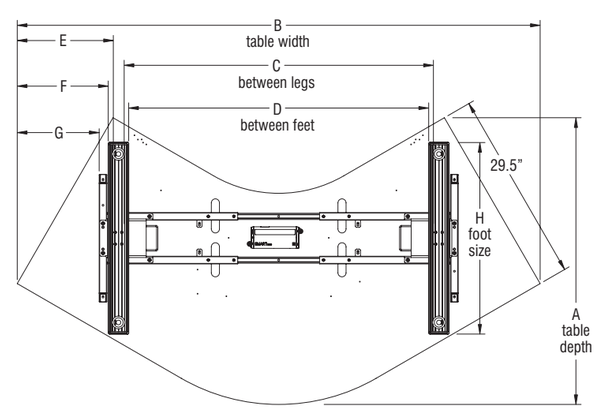

120° Corner Dual Motor T-Leg Electric-Base Table

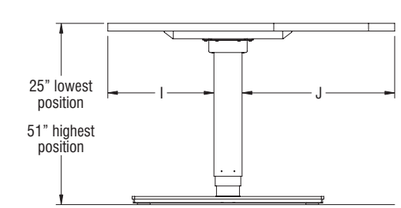

120° Corner Dual Motor T-Leg Electric-Base Table

Toggle® Tables
Technical Specifications

DIMENSIONS - Dual Motor C-Leg Electric-Base Table (Model ELC)

Statement of Line Measurements											
Dimension	Model Number	A Table Depth	B Table Width	C Between Legs	D Between Feet	E Tabletop-to-Leg	F Tabletop-to-Foot	G Tabletop-to-Support	H Foot Size	I Front Edge of Worksurface-to-Leg	J Back Edge of Worksurface-to-Leg
24 x 48"	TOGL2448ELC	23.5"	46.5"	35"	33.31"	3.84"	3.45"	1.60"	23.625"	12.9"	6.24"
24 x 54"	TOGL2454ELC	23.5"	52.5"	41"	39.31"	3.84"	3.45"	1.60"	23.625"	12.9"	6.24"
24 x 60"	TOGL2460ELC	23.5"	58.5"	47"	45.31"	3.84"	3.45"	1.60"	23.625"	12.9"	6.24"
24 x 66"	TOGL2466ELC	23.5"	64.5"	53"	51.31"	3.84"	3.45"	1.60"	23.625"	12.9"	6.24"
24 x 72"	TOGL2472ELC	23.5"	70.5"	59"	57.31"	3.84"	3.45"	1.60"	23.625"	12.9"	6.24"
30 x 48"	TOGL3048ELC	29.5"	46.5"	35"	33.31"	3.84"	3.45"	1.60"	29.625"	15.9"	9.24"
30 x 54"	TOGL3054ELC	29.5"	52.5"	41"	39.31"	3.84"	3.45"	1.60"	29.625"	15.9"	9.24"
30 x 60"	TOGL3060ELC	29.5"	58.5"	47"	45.31"	3.84"	3.45"	1.60"	29.625"	15.9"	9.24"
30 x 66"	TOGL3066ELC	29.5"	64.5"	53"	51.31"	3.84"	3.45"	1.60"	29.625"	15.9"	9.24"
30 x 72"	TOGL3072ELC	29.5"	70.5"	59"	57.31"	3.84"	3.45"	1.60"	29.625"	15.9"	9.24"
36 x 48"	TOGL3648ELC	35.5"	46.5"	35"	33.31"	3.84"	3.45"	1.60"	29.625"	18.9"	12.24"
36 x 54"	TOGL3654ELC	35.5"	52.5"	41"	39.31"	3.84"	3.45"	1.60"	29.625"	18.9"	12.24"
36 x 60"	TOGL3660ELC	35.5"	58.5"	47"	45.31"	3.84"	3.45"	1.60"	29.625"	18.9"	12.24"
36 x 66"	TOGL3666ELC	35.5"	64.5"	53"	51.31"	3.84"	3.45"	1.60"	29.625"	18.9"	12.24"
36 x 72"	TOGL3672ELC	35.5"	70.5"	59"	57.31"	3.84"	3.45"	1.60"	29.625"	18.9"	12.24"
30 x 48"	TOGLC3048ELC	44.16"	80.5"	47"	45.31"	14.86"	14.47"	12.62"	29.625"	19.68"	20.15"

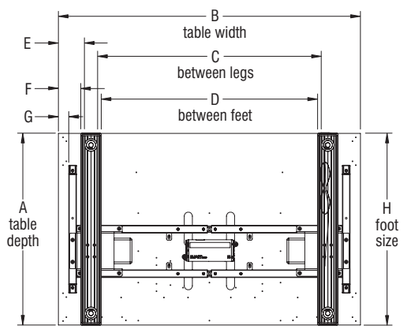

Rectangular Dual Motor C-Leg Electric-Base Table

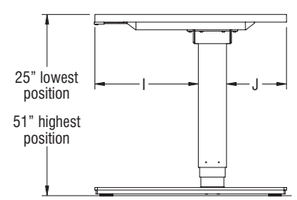

Rectangular Dual Motor C-Leg Electric-Base Table

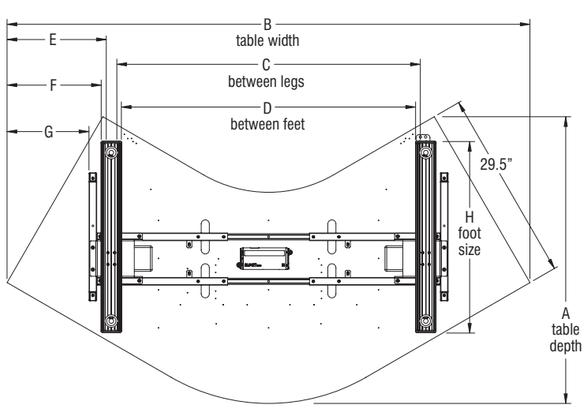

120° Corner Dual Motor C-Leg Electric-Base Table

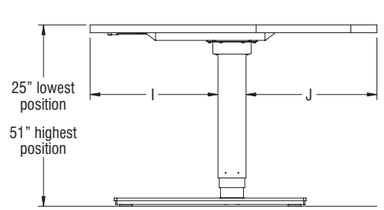

120° Corner Dual Motor C-Leg Electric-Base Table

DIMENSIONS - Triple Motor C-Leg Electric-Base Table (Model SS)

Statement of Line Measurements								
Dimension	Model Number	A Left-Side Table Depth	B Left-Side Table Width	C Right-Side Table Width	D Right-Side Table Depth	E Left-Side Between Legs	F Right-Side Between Legs	G Foot Size
24 x 48 x 60"	TOGLSS244860	23.5"	47.5"	59.5"	23.5"	31"	43"	23.625"
24 x 48 x 66"	TOGLSS244866	23.5"	47.5"	65.5"	23.5"	31"	49"	23.625"
24 x 48 x 72"	TOGLSS244872	23.5"	47.5"	71.5"	23.5"	31"	55"	23.625"
24 x 48 x 84"	TOGLSS244884	23.5"	47.5"	83.5"	23.5"	31"	67"	23.625"
24 x 60 x 48"	TOGLSS246048	23.5"	59.5"	47.5"	23.5"	43"	31"	23.625"
24 x 66 x 48"	TOGLSS246648	23.5"	65.5"	47.5"	23.5"	49"	31"	23.625"
24 x 72 x 48"	TOGLSS247248	23.5"	71.5"	47.5"	23.5"	55"	31"	23.625"
24 x 84 x 48"	TOGLSS248448	23.5"	83.5"	47.5"	23.5"	67"	31"	23.625"
30 x 48 x 60"	TOGLSS304860	29.5"	47.5"	59.5"	29.5"	31"	43"	29.625"
30 x 48 x 66"	TOGLSS304866	29.5"	47.5"	65.5"	29.5"	31"	49"	29.625"
30 x 48 x 72"	TOGLSS304872	29.5"	47.5"	71.5"	29.5"	31"	55"	29.625"
30 x 48 x 84"	TOGLSS304884	29.5"	47.5"	83.5"	29.5"	31"	67"	29.625"
30 x 60 x 48"	TOGLSS306048	29.5"	59.5"	47.5"	29.5"	43"	31"	29.625"
30 x 66 x 48"	TOGLSS306648	29.5"	65.5"	47.5"	29.5"	49"	31"	29.625"
30 x 72 x 48"	TOGLSS307248	29.5"	71.5"	47.5"	29.5"	55"	31"	29.625"
30 x 84 x 48"	TOGLSS308448	29.5"	83.5"	47.5"	29.5"	67"	31"	29.625"

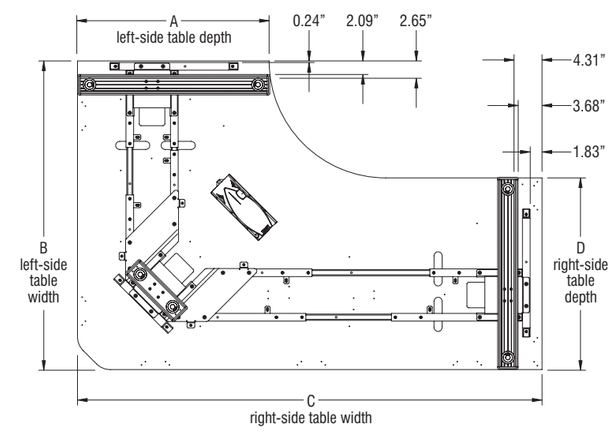

Square Shoe Triple Motor Electric-Base Table

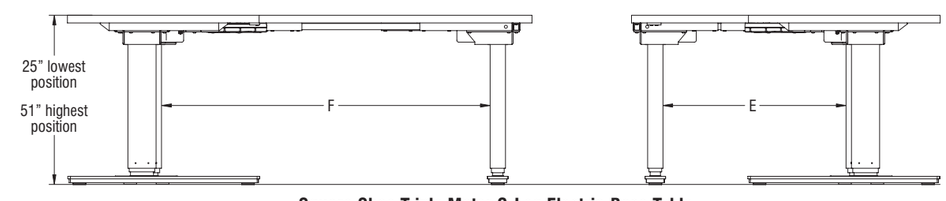

Square Shoe Triple Motor C-Leg Electric-Base Table

Toggle® Tables
Technical Specifications

DIMENSIONS - Fixed-Base Table (Model FX)

Statement of Line Measurements										
Dimension	Model Number	A Table Depth	B Table Width	C Between Legs	D Between Feet	E Tabletop-to-Leg	F Tabletop-to-Foot	G Foot Size	H Front Edge of Worksurface-to-Leg	I Back Edge of Worksurface-to-Leg
24 x 48"	TOGL2448FX	23.5"	46.5"	35"	34.21"	3.39"	3"	23.625"	9.59"	9.59"
24 x 54"	TOGL2454FX	23.5"	52.5"	41"	40.21"	3.39"	3"	23.625"	9.59"	9.59"
24 x 60"	TOGL2460FX	23.5"	58.5"	47"	46.21"	3.39"	3"	23.625"	9.59"	9.59"
24 x 66"	TOGL2466FX	23.5"	64.5"	53"	52.21"	3.39"	3"	23.625"	9.59"	9.59"
24 x 72"	TOGL2472FX	23.5"	70.5"	59"	58.21"	3.39"	3"	23.625"	9.59"	9.59"
30 x 48"	TOGL3048FX	29.5"	46.5"	35"	34.21"	3.39"	3"	29.625"	12.59"	12.59"
30 x 54"	TOGL3054FX	29.5"	52.5"	41"	40.21"	3.39"	3"	29.625"	12.59"	12.59"
30 x 60"	TOGL3060FX	29.5"	58.5"	47"	46.21"	3.39"	3"	29.625"	12.59"	12.59"
30 x 66"	TOGL3066FX	29.5"	64.5"	53"	52.21"	3.39"	3"	29.625"	12.59"	12.59"
30 x 72"	TOGL3072FX	29.5"	70.5"	59"	58.21"	3.39"	3"	29.625"	12.59"	12.59"
36 x 48"	TOGL3648FX	35.5"	46.5"	35"	34.21"	3.39"	3"	29.625"	15.59"	15.59"
36 x 54"	TOGL3654FX	35.5"	52.5"	41"	40.21"	3.39"	3"	29.625"	15.59"	15.59"
36 x 60"	TOGL3660FX	35.5"	58.5"	47"	46.21"	3.39"	3"	29.625"	15.59"	15.59"
36 x 66"	TOGL3666FX	35.5"	64.5"	53"	52.21"	3.39"	3"	29.625"	15.59"	15.59"
36 x 72"	TOGL3672FX	35.5"	70.5"	59"	58.21"	3.39"	3"	29.625"	15.59"	15.59"

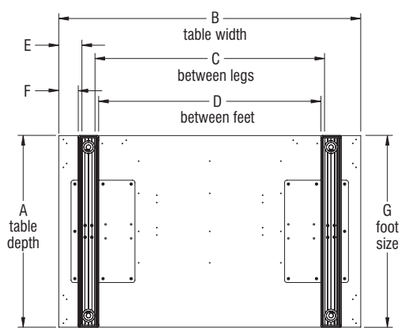

Rectangular Fixed-Base Table

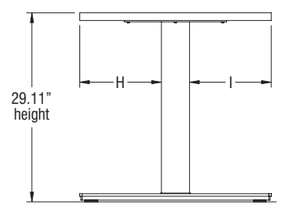

Rectangular Fixed-Base Table

DIMENSIONS - Wire Trough

Wire Trough Width	Dual Motor Table Width
24"	48"
36"	60"
48"	72"

Wire Trough Width	Fixed Table Width
36"	60"
48"	72"

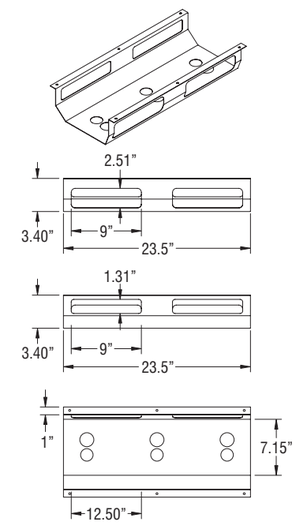

24" Wire Trough

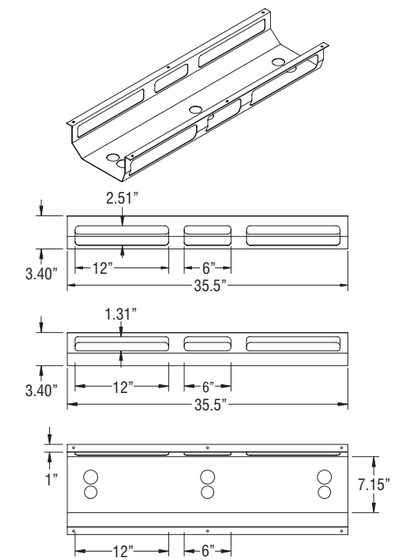

36" Wire Trough

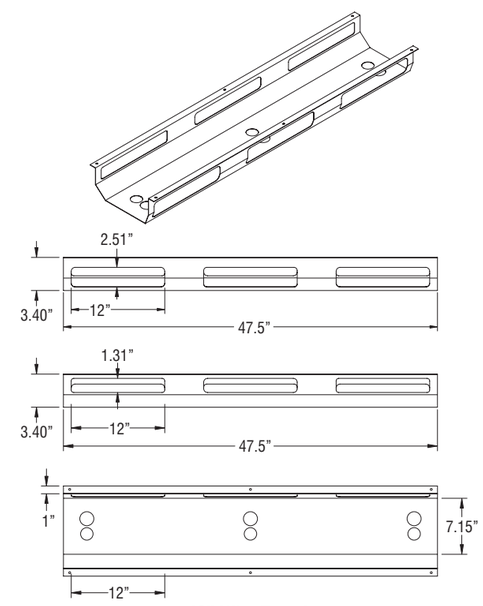

48" Wire Trough

DIMENSIONS - Polyester Felt Modesty Panel

Toggle Rectangular Tables

Reference chart below to specify the polyester felt modesty panel screens for all applicable Toggle Rectangular Table models. The tabletops below will have appropriate pre-drilled holes to accept the polyester felt modesty panel.

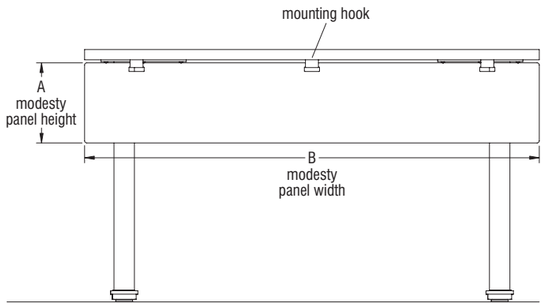

Toggle Rectangular Tables with Polyester Felt Modesty Panel (back view)(30” x 54” Model FX shown)

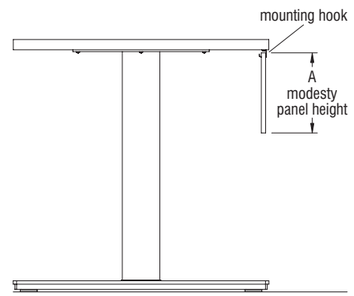

Toggle Rectangular Tables with Polyester Felt Modesty Panel (side view)(30” x 54” Model FX shown)

Polyester Felt Modesty Panel Measurements on Rectangular Tables

Table Dimension	Model Number	A Modesty Panel Height	B Modesty Panel Width	Number of Hooks
24 x 48”	TOGL2448FX	9.25”	46.5”	2
24 x 54”	TOGL2454FX	9.25”	52.5”	3
24 x 60”	TOGL2460FX	9.25”	58.5”	3
24 x 66”	TOGL2466FX	9.25”	64.5”	3
24 x 72”	TOGL2472FX	9.25”	70.5”	3
30 x 48”	TOGL3048FX	9.25”	46.5”	2
30 x 54”	TOGL3054FX	9.25”	52.5”	3
30 x 60”	TOGL3060FX	9.25”	58.5”	3
30 x 66”	TOGL3066FX	9.25”	64.5”	3
30 x 72”	TOGL3072FX	9.25”	70.5”	3
36 x 48”	TOGL3648FX	9.25”	46.5”	2
36 x 54”	TOGL3654FX	9.25”	52.5”	3
36 x 60”	TOGL3660FX	9.25”	58.5”	3
36 x 66”	TOGL3666FX	9.25”	64.5”	3
36 x 72”	TOGL3672FX	9.25”	70.5”	3
24 x 48”	TOGL2448EL	9.25”	46.5”	2
24 x 54”	TOGL2454EL	9.25”	52.5”	3
24 x 60”	TOGL2460EL	9.25”	58.5”	3
24 x 66”	TOGL2466EL	9.25”	64.5”	3
24 x 72”	TOGL2472EL	9.25”	70.5”	3
30 x 48”	TOGL3048EL	9.25”	46.5”	2
30 x 54”	TOGL3054EL	9.25”	52.5”	3
30 x 60”	TOGL3060EL	9.25”	58.5”	3
30 x 66”	TOGL3066EL	9.25”	64.5”	3
30 x 72”	TOGL3072EL	9.25”	70.5”	3
36 x 48”	TOGL3648EL	9.25”	46.5”	2
36 x 54”	TOGL3654EL	9.25”	52.5”	3
36 x 60”	TOGL3660EL	9.25”	58.5”	3
36 x 66”	TOGL3666EL	9.25”	64.5”	3
36 x 72”	TOGL3672EL	9.25”	70.5”	3
24 x 48”	TOGL2448ELC	9.25”	46.5”	2
24 x 54”	TOGL2454ELC	9.25”	52.5”	3
24 x 60”	TOGL2460ELC	9.25”	58.5”	3
24 x 66”	TOGL2466ELC	9.25”	64.5”	3
24 x 72”	TOGL2472ELC	9.25”	70.5”	3
30 x 48”	TOGL3048ELC	9.25”	46.5”	2
30 x 54”	TOGL3054ELC	9.25”	52.5”	3
30 x 60”	TOGL3060ELC	9.25”	58.5”	3
30 x 66”	TOGL3066ELC	9.25”	64.5”	3
30 x 72”	TOGL3072ELC	9.25”	70.5”	3
36 x 48”	TOGL3648ELC	9.25”	46.5”	2
36 x 54”	TOGL3654ELC	9.25”	52.5”	3
36 x 60”	TOGL3660ELC	9.25”	58.5”	3
36 x 66”	TOGL3666ELC	9.25”	64.5”	3
36 x 72”	TOGL3672ELC	9.25”	70.5”	3

Toggle® Tables
Technical Specifications

DIMENSIONS - Polyester Felt Modesty Panel

Toggle 120° Corner Tables

Reference chart below to specify the polyester felt modesty panel screens for all applicable Toggle 120° Corner Table models. The tabletops below will have appropriate pre-drilled holes to accept the polyester felt modesty panel.

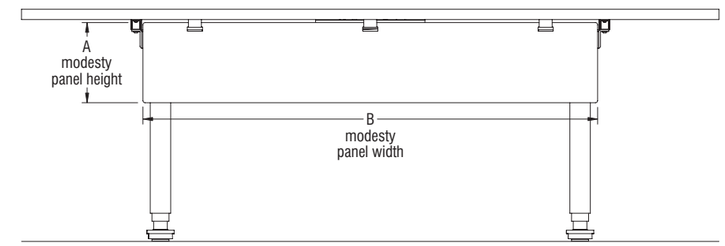

Toggle 120° Corner Tables with Polyester Felt Modesty Panel (back view)(30” x 48” Model EL shown)

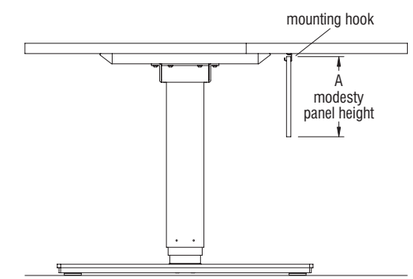

Toggle 120° Corner Tables with Polyester Felt Modesty Panel (side view)(30” x 48” Model EL shown)

Polyester Felt Modesty Panel Measurements on 120° Corner Tables

Table Dimension	Model Number	A Modesty Panel Height	B Modesty Panel Width	Number of Hooks
30 x 48”	TOGLC3048EL	9.25”	52.5”	3
30 x 48”	TOGLC3048ELC	9.25”	52.5”	3

DIMENSIONS - Polyester Felt Modesty Panel

Toggle Square Shoe Tables

Reference chart below to specify the polyester felt modesty panel screens for all applicable Toggle Square Shoe Table models. The tabletops below will have appropriate pre-drilled holes to accept the polyester felt modesty panel.

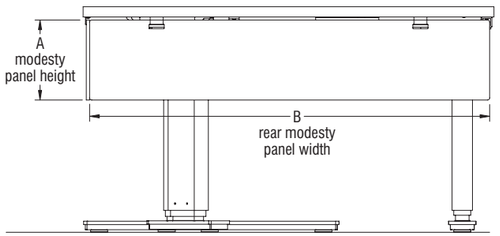

Toggle Square Shoe Tables with Polyester Felt Modesty Panel (back view)(30” x 48” Model EL shown)

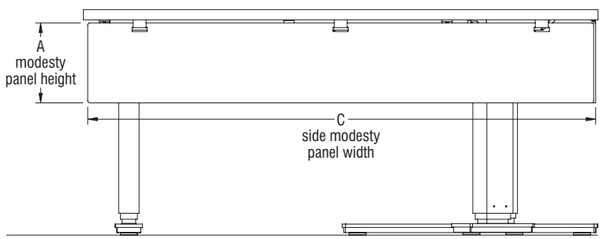

Toggle Square Shoe Tables with Polyester Felt Modesty Panel (side view)(30” x 48” Model EL shown)

Polyester Felt Modesty Panel Measurements on Square Shoe Tables						
Table Dimension	Model Number	A Modesty Panel Height	B Rear Modesty Panel Width	Number of Hooks for Rear Modesty Panel	C Side Modesty Panel Width	Number of Hooks for Side Modesty Panel
24 x 48 x 60”	TOGLSS244860	9.25”	46.5”	2	58.5”	3
24 x 48 x 66”	TOGLSS244866	9.25”	46.5”	2	64.5”	3
24 x 48 x 72”	TOGLSS244872	9.25”	46.5”	2	70.5”	3
24 x 48 x 84”	TOGLSS244884	9.25”	46.5”	2	82.5”	3
24 x 60 x 48”	TOGLSS246048	9.25”	58.5”	3	46.5”	2
24 x 66 x 48”	TOGLSS246648	9.25”	64.5”	3	46.5”	2
24 x 72 x 48”	TOGLSS247248	9.25”	70.5”	3	46.5”	2
24 x 84 x 48”	TOGLSS248448	9.25”	82.5”	3	46.5”	2
30 x 48 x 60”	TOGLSS304860	9.25”	46.5”	2	58.5”	3
30 x 48 x 66”	TOGLSS304866	9.25”	46.5”	2	64.5”	3
30 x 48 x 72”	TOGLSS304872	9.25”	46.5”	2	70.5”	3
30 x 48 x 84”	TOGLSS304884	9.25”	46.5”	2	82.5”	3
30 x 60 x 48”	TOGLSS306048	9.25”	58.5”	3	46.5”	2
30 x 66 x 48”	TOGLSS306648	9.25”	64.5”	3	46.5”	2
30 x 72 x 48”	TOGLSS307248	9.25”	70.5”	3	46.5”	2
30 x 84 x 48”	TOGLSS308448	9.25”	82.5”	3	46.5”	2

Toggle® Tables
Technical Specifications

STATEMENT OF LINE

Toggle Dual Motor T-Leg Electric-Base Table (Model EL)

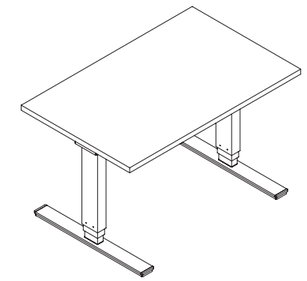

TOGLEL

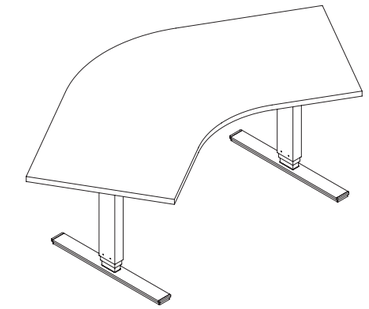

TOGLCEL

Toggle Dual Motor C-Leg Electric-Base Table (Model ELC)

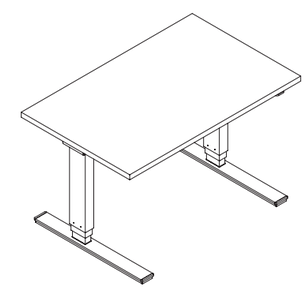

TOGLELC

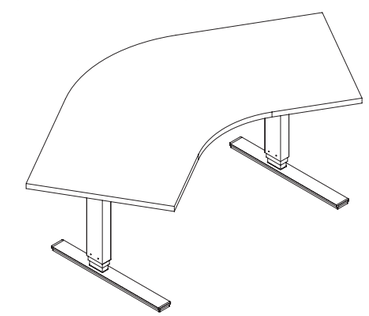

TOGLCELC

Toggle Fixed-Base Table (Model FX)

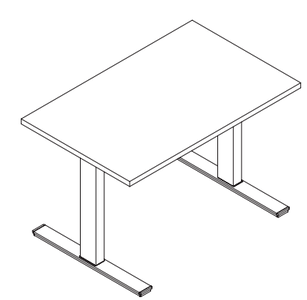

TOGLFX

Toggle Triple Motor C-Leg Electric-Base Table (Model SS)

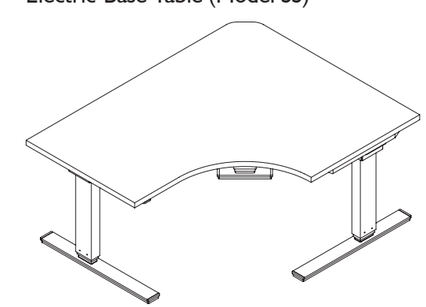

TOGLSS

1330 Bellevue Street • Green Bay, WI 54302 • 1-800-424-2432 • www.ki.com
© 2024 Krueger International, Inc. All Rights Reserved • Code KI-TS-000020R10/KI/PDF/0724

Toggle® Tables
Technical Specifications

PRODUCT SPECIFICATIONS

Toggle™ Tables

Control Unit

July 2024

TECHNICAL SPECIFICATIONS

Features

- Highly-efficient Switch Mode Power Supply (SMPS).
- Low standby power consumption, low field emissions.
- Table height display with up to three memory positions (depending on control switch).
- ISP (Intelligent System Protection).
- Container/Shelf Stop Programming.
- Enhanced Drive Comfort.

Table Specs - Toggle Dual Motor	
Base Widths	• 43.31”-70.87”
Foot Options	• 24” & 30”
Height Range	• 26”-52”
Speed	• 1.4 inches per second
Base Operating Capacity	• 264 lbs

Note:

- Don’t disassemble the control unit or motor housing under any circumstances as there is a danger of electric shock.
- The control unit may only be operated with main voltage as specified on the type plate. Control units are also available for the main voltages used in other countries.
- Only use the power cord supplied with the control unit. Check that it is not damaged and do not ever operate the table control unit if the power cord is damaged.
- The control unit must be mounted before commissioning and operation.
- When installing the control unit and putting it into operation, be sure that the table is acclimatized to the temperature and humidity values for operation, shown on the next page.
- In the event of a fault, please contact customer service immediately. Only original spare parts may be used for repairing the control units. Parts may only be replaced by qualified service technicians, otherwise the warranty/guarantee shall be null and void.
- Do not expose the control unit to moisture, drips or splashes.
- If unnatural fumes occur, unplug the power cord immediately and contact customer service.

TECHNICAL DATA

GENERAL	
Supply Voltage	• EU: 207-253 V / 50-60Hz • US: 90-127V / 50-60Hz
Nominal Voltage	• EU: 230V / 50 Hz • US: 120V / 60Hz
Power draw at normal operation	• ≤128 W
Standby power, primary (typical)	• ≤0.3 W
Operating voltage for internal and external electronics	• VDC + or - 15% 250mA
Operating voltage for internal and external electronics in standby mode (average)	• VDC + or - 15% 7mA
Precision of Motor current measurement @ 100% Output Voltage and 4-8A	• + or - 15%
Ambient temperature	• 32-86°F (0-30°C)
Relative humidity (for operation)	• 5-90% (non condensing)
Storage and transport temperature	• -40-185°F (-40-85°C)
Relative humidity (for storage)	• 5-90% (non condensing)

CONTROL UNIT	
Switching cycles Depicted currents are sums over all motor channels	Normal cycle 2/18: 2min move: 4A@32V 128W Pause: 18 minutes
Maximum current per motor channel	• 8A Maximum sum current restricted according to values shown above
Weight (typical)	• 347g

3.1 PIN ASSIGNMENT

M1 = Motor Socket 1
COM/DC = Motor Socket 2
HC = Control Switch Socket
AC = Power Socket
HS = Integrated Remote Control

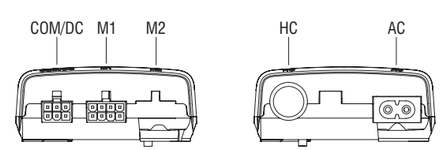

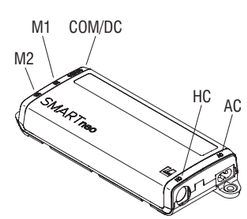

Smartneo-V-N-n-x-y-US Control Unit

TECHNICAL DATA

LEG MOTOR

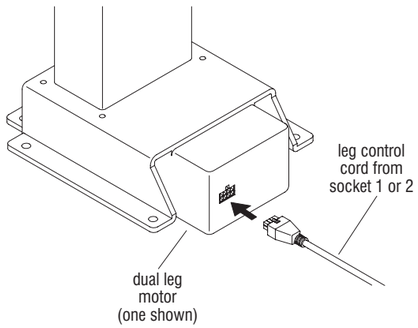

Dual Motor Leg

REMOTE OPTIONS

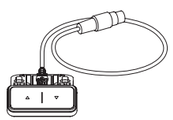

Control Switch

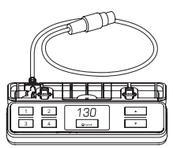

**Programmable Deluxe
Control Switch with Display**

3.2 INTELLIGENT SYSTEM PROTECTION (ISP) - ANTI PINCH

- Pay attention to the following instructions if you are using the anti-pinch feature ISP (Intelligent System Protection).

WARNING: In spite of ISP (Integrated System Protection) being in place, there may still be a risk of pinching in exceptional cases, as it is not only the control unit, but also the interaction between the mechanical and electronic systems that is responsible for cutting out the motor. In addition, the mechanical components, motor and ambient conditions all affect cut-out sensitivity. As the table manufacturer, KI cannot therefore eliminate this residual risk completely or accept any liability.

3.3 TYPE PLATE

- The following figure shows the type label and its location on the control box housing.

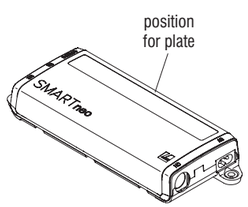

Smartneo-V-N-n-x-y-US Control Unit

Toggle® Tables
Technical Specifications

TECHNICAL DATA

END OF LIFE DISPOSAL

- When the Smartneo-V-N-n-x-y-US control unit is no longer required, please note the following for disposal:

NOTE: The Smartneo-V-N-n-x-y-US control unit is electrical, or electronic equipment according to directive 2002/96/EC and therefore marked with the symbol depicted on the right.

NOTE: Ensure eco-friendly disposal of all control unit components (separate the plastic and electronic parts for collection). Also ensure eco-friendly disposal of all other components (drives, cables, etc.).

STANDARDS

EUROPE

- EN 60335-1:2012 (IEC 60335-1:2010 Fifth Edition)
- DIN EN ISO 13849-1: 2008, Kategorie B, Performance Level b
- DIN EN 62233:2008
- DIN EN 61000-6-3:2007+A1:2011
- DIN EN 61000-6-2:2005

NOTE: This product is RoHS compliant according to directive 2002/95/EC.

NOTE: This product is REACH compliant according to directive 2006/121/EC (Edict 1907/2006).

USA AND CANADA

- UL 60950-1, 2nd Edition
- CSA C22.2 60950-1, 2nd Edition

1330 Bellevue Street • Green Bay, WI 54302 • 1-800-424-2432 • www.ki.com
© 2024 Krueger International, Inc. All Rights Reserved • Code KI-62686R2/KI/PDF/0724

Toggle® Tables
Product Color Options

Toggle® Tables
Product Color Options

Surface Finish--Grade 1 Standard Laminate

Beigewood	LBZ
Belair	LBQ
Biltmore Cherry	LBT
Black	LBK
Brighton Walnut	LBW
Castle Oak	LCO
Cherry Storm	LCX
Classic Linen	LCI
Cocobala	LCC
Crisp Linen	LRI
Designer White	LDR
Dove Grey	LDG
Florence Walnut	LFC
Friston Ash	LFH
Frosty White	LFW
Graphite Nebula	LGN
Grey	LGE
High Rise	LHE
Hollyberry	LHY
Island	LID
Italian Silver Ash	LIT
Kensington Maple	LKM
Lapis Blue	LLB
Monticello Maple	LMT
North Sea	LNA
Ocean	LON
Pinnacle Walnut	LPW
River Cherry	LRY
Shadow Zephyr	LSR
Sterling Ash	LAZ
Titanium Evolv	LTV
White Nebula	LWL
White Sand	LWN
Windsor Mahogany	LWY

Surface Finish--Grade 2 Standard Laminate

Akira	LAK
Black Alicante	LBY
Black Hills Oak	LBH
Calcutta Marble	LCQ
Dering Forest	LDF
Fawn Cypress	LFQ
Ice Mist	LIM
Markerboard White	LMK
Valley Forge Elm	LVF
White River Forest	LWR

Surface Finish--Grade 3 Standard Laminate

Black Velvet	LBV
Cumberland Walnut	LCJ
Designer White Velvet	LDE
Hartley Walnut	LHW
Nile Velvet	LNL
Raleigh Walnut	LRW
Solano Walnut	LSG
Spruce Velvet	LSC

Base and Trough Paint Color

Black	BL
Silver	SL
White	WH

Edge Color for 74P Edge

Akira	EAK
Beigewood	EBZ
Belair	EBQ
Biltmore Cherry	EBT
Black	EBL
Black Hills Oak	EBH
Blue Grey	EGR
Brighton Walnut	EBW
Castle Oak	ECO
Cayenne	ECY
Cherry Storm	ECX
Cocobala	ECC
Cool Grey	ECG
Cumberland Walnut	ECJ
Dering Forest	EDF
Designer White	EDR
Earthen Clay	EEY
Everglade Shade	EEV
Fawn Cypress	EFQ
Flannel	EFN
Florence Walnut	EFC
Friston Ash	EFH
Frosty White	EFW
Hartley Walnut	EHW
Hazy Jade	EHJ
Honey Bee	EHY
Italian Silver Ash	EIT
Kensington Maple	EKM
Light Tone	ELG
Mardi Gras	EMG
Misty Brown	EMY
Monticello Maple	EMT
Multiplex	EMB
Nemo	ENE
Nordic	END
Pinnacle Walnut	EPW
Poppy Red	EPR
Purple Haze	EPH
Rainforest	ERQ
Raleigh Walnut	ERW
River Cherry	ERY
Rubber Ducky	ERK
Sand	ESA
Sky Blue	ESK
Solano Walnut	ESG
Sterling Ash	EAZ
Surf's Up	ESP
Tarragon	ETQ
Twilight Shadow	ETI
Ultra Blue	EUB
Valley Forge Elm	EVF
Warm Grey	EWG
White River Forest	EWR
Windsor Mahogany	EWY
Zesty Lime	EZL

Edge Color for KN Edge

Beigewood	EBZ
Belair	EBQ
Biltmore Cherry	EBT
Black	EBL
Blue Grey	EGR
Brighton Walnut	EBW
Castle Oak	ECO
Cayenne	ECY
Cherry Storm	ECX
Cocobala	ECC
Cool Grey	ECG
Designer White	EDR
Earthen Clay	EEY
Everglade Shade	EEV
Flannel	EFN
Florence Walnut	EFC
Friston Ash	EFH
Frosty White	EFW
Hazy Jade	EHJ
Honey Bee	EHY
Italian Silver Ash	EIT
Kensington Maple	EKM
Light Tone	ELG
Mardi Gras	EMG
Misty Brown	EMY
Monticello Maple	EMT
Nemo	ENE
Nordic	END
Pinnacle Walnut	EPW
Poppy Red	EPR
Purple Haze	EPH
Rainforest	ERQ
River Cherry	ERY
Rubber Ducky	ERK
Sand	ESA
Sky Blue	ESK
Sterling Ash	EAZ
Surf's Up	ESP
Tarragon	ETQ
Twilight Shadow	ETI
Ultra Blue	EUB
Warm Grey	EWG
Windsor Mahogany	EWY
Zesty Lime	EZL

Polyester Felt Modesty Panel

Dandelion	FTDD
Fawn	FTFW
Flannel	FTFN
Heather	FTHR
Lava	FTLV
Mallard	FTML
Midnight Blue	FTMB
Pepper	FTPR
Spring	FTSG
Tidal Wave	FTTW

Certain options referenced may not be available on GSA Schedule.

Toggle® T-Leg Tables
Fixed Base

Toggle® T-Leg Tables
Fixed Base

	MODEL	A x B	MODEL NUMBER: Basic Model	Edge Style	Modesty Panel	Edge Color	Surface Finish	Base Finish	Polyester Modesty Panel Color	Approx. Packaged Weight	74P Edge (74P)	Postformed Edge (PL)	Knife Edge (KN)	Laminate Grade 2 add to list price	Laminate Grade 3 add to list price
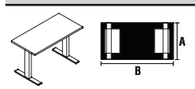	**Rectangular Fixed Base Tables - 24"D** • 29" High	23-1/2 x 46-1/2"	TOGL2448FX	□□□	□□□	□□□	□□□	□□	□□□□	85.0#	$ 699	$ 728	$ 750	$ 18	$ 115
		23-1/2 x 52-1/2"	TOGL2454FX	□□□	□□□	□□□	□□□	□□	□□□□	85.0#	735	760	791	25	170
		23-1/2 x 58-1/2"	TOGL2460FX	□□□	□□□	□□□	□□□	□□	□□□□	95.0#	745	773	811	25	170
		23-1/2 x 64-1/2"	TOGL2466FX	□□□	□□□	□□□	□□□	□□	□□□□	95.0#	789	815	878	25	170
TGFX		23-1/2 x 70-1/2"	TOGL2472FX	□□□	□□□	□□□	□□□	□□	□□□□	105.0#	800	833	900	25	170
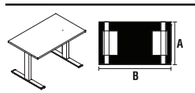	**Rectangular Fixed Base Tables - 30"D** • 29" High	29-1/2 x 46-1/2"	TOGL3048FX	□□□	□□□	□□□	□□□	□□	□□□□	97.0#	$ 773	$ 804	$ 807	$ 25	$ 170
		29-1/2 x 52-1/2"	TOGL3054FX	□□□	□□□	□□□	□□□	□□	□□□□	97.0#	847	885	933	25	170
		29-1/2 x 58-1/2"	TOGL3060FX	□□□	□□□	□□□	□□□	□□	□□□□	109.0#	862	897	944	25	170
		29-1/2 x 64-1/2"	TOGL3066FX	□□□	□□□	□□□	□□□	□□	□□□□	109.0#	908	945	1032	25	170
TGFX		29-1/2 x 70-1/2"	TOGL3072FX	□□□	□□□	□□□	□□□	□□	□□□□	121.0#	921	959	1047	25	170
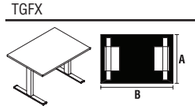	**Rectangular Fixed Base Tables - 36"D** • 29" High	35-1/2 x 46-1/2"	TOGL3648FX	□□□	□□□	□□□	□□□	□□	□□□□	104.0#	$ 811	$ 842	$ 913	$ 35	$ 225
		35-1/2 x 52-1/2"	TOGL3654FX	□□□	□□□	□□□	□□□	□□	□□□□	104.0#	890	928	1013	50	350
		35-1/2 x 58-1/2"	TOGL3660FX	□□□	□□□	□□□	□□□	□□	□□□□	121.0#	905	941	1029	50	350
		35-1/2 x 64-1/2"	TOGL3666FX	□□□	□□□	□□□	□□□	□□	□□□□	121.0#	928	964	1335	50	350
TGFX		35-1/2 x 70-1/2"	TOGL3672FX	□□□	□□□	□□□	□□□	□□	□□□□	136.0#	936	973	1349	50	350
			A	B	C	D	E	F	G						

HOW TO ORDER

Indicate the following information on order form:
1. Quantity of each item.
2. Model number, including options. See "How To Build a Model Number".
3. Any special service required.

Note: • The □ indicates that a choice is required.
• The absence of the □ indicates that no choice is required.
• Alpha-numeric characters in place of □ indicate that no other alternatives are available.

HOW TO BUILD A MODEL NUMBER

A Select basic model.

B Select edge style.

74P	- 74P edge
PL	- Postformed edge
KN	- Knife edge

Knife edge (KN) and Postformed edge (PL) on user side only

C Select modesty panel.

NMP	- No modesty panel
PMP	- Polyester felt modesty panel

D Select edge color.
Refer to the **Product Color Options** page in this price list.
Edge color offerings are based on edge style selections.

E Select surface finish.
Refer to the **Product Color Options** page in this price list.
Surface finish offerings are based on edge style selections.

F Select base finish.
Refer to the **Product Color Options** page in this price list.

G Select modesty panel color (only if polyester felt panel is chosen).
Refer to the **Product Color Options** page in this price list.

SPECIAL SERVICES

Special Carton Marking

With specially marked information	N/C

Shipping

Ships **knocked down, FOB Bonduel, WI 54107, freight prepaid.** Freight class 125.

Specifications and prices are subject to change without prior notice.

Toggle® T-Leg Tables
Dual Motor Electric Base

Toggle® T-Leg Tables
Dual Motor Electric Base

	MODEL	A x B x C	MODEL NUMBER: Basic Model	Edge Style	Modesty Panel	Edge Color	Surface Finish	Base Finish	Polyester Modesty Panel Color	Approx. Packaged Weight	74P Edge (74P)	Postformed Edge (PL)	Knife Edge (KN)	Laminate Grade 2 add to list price	Laminate Grade 3 add to list price
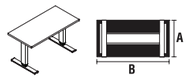 TGEL	**Rectangular Dual Motor Electric Base Tables - 24"D** • 26-52" Electrically adjustable • Simple up/down switch • Maximum operating load varies (see chart below) • 3-Stage base	23-1/2 x 46-1/2"	TOGL2448EL	□□□	□□□	□□□	□□□	□□	□□□□	131.0#	$ 2158	$ 2203	$ 2245	$ 18	$ 115
		23-1/2 x 52-1/2"	TOGL2454EL	□□□	□□□	□□□	□□□	□□	□□□□	131.0#	2195	2255	2280	25	170
		23-1/2 x 58-1/2"	TOGL2460EL	□□□	□□□	□□□	□□□	□□	□□□□	141.0#	2209	2270	2296	25	170
		23-1/2 x 64-1/2"	TOGL2466EL	□□□	□□□	□□□	□□□	□□	□□□□	141.0#	2263	2349	2354	25	170
		23-1/2 x 70-1/2"	TOGL2472EL	□□□	□□□	□□□	□□□	□□	□□□□	151.0#	2273	2362	2364	25	170
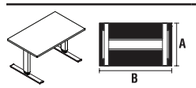 TGEL	**Rectangular Dual Motor Electric Base Tables - 30"D** • 26-52" Electrically adjustable • Simple up/down switch • Maximum operating load varies (see chart below) • 3-Stage base	29-1/2 x 46-1/2"	TOGL3048EL	□□□	□□□	□□□	□□□	□□	□□□□	143.0#	$ 2252	$ 2310	$ 2344	$ 25	$ 170
		29-1/2 x 52-1/2"	TOGL3054EL	□□□	□□□	□□□	□□□	□□	□□□□	143.0#	2324	2398	2417	25	170
		29-1/2 x 58-1/2"	TOGL3060EL	□□□	□□□	□□□	□□□	□□	□□□□	155.0#	2340	2414	2433	25	170
		29-1/2 x 64-1/2"	TOGL3066EL	□□□	□□□	□□□	□□□	□□	□□□□	155.0#	2392	2490	2502	25	170
		29-1/2 x 70-1/2"	TOGL3072EL	□□□	□□□	□□□	□□□	□□	□□□□	168.0#	2405	2502	2514	25	170
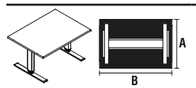 TGEL	**Rectangular Dual Motor Electric Base Tables - 36"D** • 26-52" Electrically adjustable • Simple up/down switch • Maximum operating load varies (see chart below) • 3-Stage base	35-1/2 x 46-1/2"	TOGL3648EL	□□□	□□□	□□□	□□□	□□	□□□□	151.0#	$ 2285	$ 2375	$ 2378	$ 35	$ 225
		35-1/2 x 52-1/2"	TOGL3654EL	□□□	□□□	□□□	□□□	□□	□□□□	151.0#	2367	2454	2472	50	350
		35-1/2 x 58-1/2"	TOGL3660EL	□□□	□□□	□□□	□□□	□□	□□□□	168.0#	2378	2472	2485	50	350
		35-1/2 x 64-1/2"	TOGL3666EL	□□□	□□□	□□□	□□□	□□	□□□□	168.0#	2398	2495	2763	50	350
		35-1/2 x 70-1/2"	TOGL3672EL	□□□	□□□	□□□	□□□	□□	□□□□	182.0#	2411	2507	2773	50	350
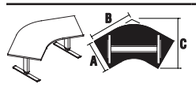 TGEL	**120° Corner-Dual Motor Electric Base Tables** • 120° angle • 26-52" Electrically adjustable • Simple up/down switch • Maximum operating load varies (see chart below) • 3-Stage base • PL-edge is not available on 120 degree corner table • Includes one 54" modesty panel when specified • When using modesty panel and wire trough, trough must be located in front position	29-1/2 x 46-1/2 x 48-7/8"	TOGLC3048EL	□□□	□□□	□□□	□□□	□□	□□□□	170.0#	$ 2474	N/A	$ 2650	$ 70	$ 450
			A	B	C	D	E	F	G						

HOW TO ORDER

Indicate the following information on order form:
1. Quantity of each item.
2. Model number, including options. See "How To Build a Model Number".
3. Any special service required.

Note: • The □ indicates that a choice is required.
• The absence of the □ indicates that no choice is required.
• Alpha-numeric characters in place of □ indicate that no other alternatives are available.

HOW TO BUILD A MODEL NUMBER

A Select basic model.

B Select edge style.

74P	- 74P edge
PL	- Postformed edge
KN	- Knife edge

Knife edge (KN) and Postformed edge (PL) on user side only

C Select modesty panel.

NMP	- No modesty panel
PMP	- Polyester felt modesty panel

D Select edge color.
Refer to the **Product Color Options** page in this price list.
Edge color offerings are based on edge style selections.

E Select surface finish.
Refer to the **Product Color Options** page in this price list.
Surface finish offerings are based on edge style selections.

F Select base finish.
Refer to the **Product Color Options** page in this price list.

G Select modesty panel color (only if polyester felt panel is chosen).
Refer to the **Product Color Options** page in this price list.

INFORMATION

MAXIMUM OPERATING LOAD

Model Size	Maximum Operating Load
2448EL/C	220 Pounds
2460EL/C	210 Pounds
2472EL/C	200 Pounds
3048EL/C	210 Pounds
3060EL/C	200 Pounds
3072EL/C	185 Pounds
3648EL/C	200 Pounds
3660EL/C	185 Pounds
3672EL/C	170 Pounds
3048EL/C (corner)	180 Pounds

SPECIAL SERVICES

Special Carton Marking

With specially marked information N/C

Shipping

Ships **knocked down, FOB Bonduel, WI 54107, freight prepaid.** Freight class 125.

Specifications and prices are subject to change without prior notice.

Toggle® T-Leg Tables
Dual Motor Electric-Bases Only

Toggle® T-Leg Tables
Dual Motor Electric-Bases Only

	MODEL	A	MODEL NUMBER Basic Model	MODEL NUMBER Base Finish	Approx. Packaged Weight	Delivered Pricing
HRDPT	**Rectangular Dual Motor Electric-Base Only - 24"D** • For use with 24" deep surfaces, 48-72" wide • Adjusts from 26-52" including 1-1/4" top • Top (not included) should be undersized .25-.75" to allow safe clearance in any work area • Maximum operating load is 264 lbs (including weight of top) • 3-Stage base	24"	TGBO.EL24	□□	85.0#	$ 2016
HRDPT	**Rectangular Dual Motor Electric-Base Only - 30"D** • For use with 30 and 36" deep surfaces, 48-72" wide • Adjusts from 26-52" including 1-1/4" top • Top (not included) should be undersized .25-.75" to allow safe clearance in any work area • Maximum operating load is 264 lbs (including weight of top) • 3-Stage base	30"	TGBO.EL30	□□	90.0#	$ 2092
			Ⓐ	Ⓑ		

HOW TO ORDER

Indicate the following information on order form:
1. Quantity of each item.
2. Model number, including options. See "How To Build a Model Number".
3. Any special service required.

Note: • The □ indicates that a choice is required.
• The absence of the □ indicates that no choice is required.
• Alpha-numeric characters in place of □ indicate that no other alternatives are available.

HOW TO BUILD A MODEL NUMBER

Ⓐ Select basic model.

Ⓑ Select base finish.
Refer to the **Product Color Options** page in this price list.

SPECIAL SERVICES

Special Carton Marking

With specially marked information N/C

Shipping

Ships **knocked down, FOB Bonduel, WI 54107, freight prepaid.** Freight class 125.

Specifications and prices are subject to change without prior notice.

Toggle® C-Leg Tables
Dual Motor Electric Base

Toggle® C-Leg Tables
Dual Motor Electric Base

	MODEL	A x B x C	MODEL NUMBER Basic Model	Edge Style	Modesty Panel	Edge Color	Surface Finish	Base Finish	Polyester Modesty Panel Color	Approx. Packaged Weight	74P Edge (74P)	Postformed Edge (PL)	Knife Edge (KN)	Laminate Grade 2 add to list price	Laminate Grade 3 add to list price
TGEC	**Rectangular Dual Motor Electric Base Tables - 24"D** • 26-52" Electrically adjustable • Simple up/down switch • Maximum operating load varies (see chart below) • 3-Stage base	23-1/2 x 46-1/2"	TOGL2448ELC	□□□	□□□	□□□	□□□	□□	□□□□	131.0#	$ 2158	$ 2203	$ 2245	$ 18	$ 115
		23-1/2 x 52-1/2"	TOGL2454ELC	□□□	□□□	□□□	□□□	□□	□□□□	131.0#	2195	2255	2280	25	170
		23-1/2 x 58-1/2"	TOGL2460ELC	□□□	□□□	□□□	□□□	□□	□□□□	141.0#	2209	2270	2296	25	170
		23-1/2 x 64-1/2"	TOGL2466ELC	□□□	□□□	□□□	□□□	□□	□□□□	141.0#	2263	2349	2354	25	170
		23-1/2 x 70-1/2"	TOGL2472ELC	□□□	□□□	□□□	□□□	□□	□□□□	151.0#	2273	2362	2364	25	170
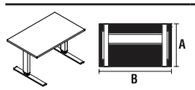 TGEC	**Rectangular Dual Motor Electric Base Tables - 30"D** • 26-52" Electrically adjustable • Simple up/down switch • Maximum operating load varies (see chart below) • 3-Stage base	29-1/2 x 46-1/2"	TOGL3048ELC	□□□	□□□	□□□	□□□	□□	□□□□	143.0#	$ 2252	$ 2310	$ 2344	$ 25	$ 170
		29-1/2 x 52-1/2"	TOGL3054ELC	□□□	□□□	□□□	□□□	□□	□□□□	143.0#	2330	2398	2422	25	170
		29-1/2 x 58-1/2"	TOGL3060ELC	□□□	□□□	□□□	□□□	□□	□□□□	155.0#	2340	2414	2433	25	170
		29-1/2 x 64-1/2"	TOGL3066ELC	□□□	□□□	□□□	□□□	□□	□□□□	155.0#	2392	2490	2502	25	170
		29-1/2 x 70-1/2"	TOGL3072ELC	□□□	□□□	□□□	□□□	□□	□□□□	168.0#	2405	2502	2514	25	170
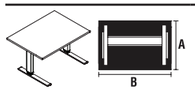 TGEC	**Rectangular Dual Motor Electric Base Tables - 36"D** • 26-52" Electrically adjustable • Simple up/down switch • Maximum operating load varies (see chart below) • 3-Stage base	35-1/2 x 46-1/2"	TOGL3648ELC	□□□	□□□	□□□	□□□	□□	□□□□	151.0#	$ 2285	$ 2375	$ 2378	$ 35	$ 225
		35-1/2 x 52-1/2"	TOGL3654ELC	□□□	□□□	□□□	□□□	□□	□□□□	151.0#	2367	2458	2472	50	350
		35-1/2 x 58-1/2"	TOGL3660ELC	□□□	□□□	□□□	□□□	□□	□□□□	168.0#	2378	2472	2485	50	350
		35-1/2 x 64-1/2"	TOGL3666ELC	□□□	□□□	□□□	□□□	□□	□□□□	168.0#	2398	2495	2763	50	350
		35-1/2 x 70-1/2"	TOGL3672ELC	□□□	□□□	□□□	□□□	□□	□□□□	182.0#	2411	2507	2773	50	350
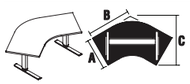 TGEC	**120° Corner-Dual Motor Electric Base Tables** • 120 degree angle • 26-52" Electrically adjustable • Simple up/down switch • Maximum operating load varies (see chart below) • 3-Stage base • PL-edge is not available on 120 degree corner table • Includes one 54" modesty panel when specified • When using modesty panel and wire trough, trough must be located in front position	29-1/2 x 46-1/2 x 48-7/8"	TOGLC3048ELC	□□□	□□□	□□□	□□□	□□	□□□□	170.0#	$ 2474	N/A	$ 2650	$ 70	$ 450
			A	B	C	D	E	F	G						

HOW TO ORDER

Indicate the following information on order form:
1. Quantity of each item.
2. Model number, including options. See "How To Build a Model Number".
3. Any special service required.

Note: • The □ indicates that a choice is required.
• The absence of the □ indicates that no choice is required.
• Alpha-numeric characters in place of □ indicate that no other alternatives are available.

HOW TO BUILD A MODEL NUMBER

A Select basic model.

B Select edge style.

74P	- 74P edge
PL	- Postformed edge
KN	- Knife edge

Knife edge (KN) and Postformed edge (PL) on user side only

C Select modesty panel.

NMP	- No modesty panel
PMP	- Polyester felt modesty panel

D Select edge color.
Refer to the **Product Color Options** page in this price list.
Edge color offerings are based on edge style selections.

E Select surface finish.
Refer to the **Product Color Options** page in this price list.
Surface finish offerings are based on edge style selections.

F Select base finish.
Refer to the **Product Color Options** page in this price list.

G Select modesty panel color (only if polyester felt panel is chosen).
Refer to the **Product Color Options** page in this price list.

INFORMATION

MAXIMUM OPERATING LOAD

Model Size	Maximum Operating Load
2448EL/C	220 Pounds
2460EL/C	210 Pounds
2472EL/C	200 Pounds
3048EL/C	210 Pounds
3060EL/C	200 Pounds
3072EL/C	185 Pounds
3648EL/C	200 Pounds
3660EL/C	185 Pounds
3672EL/C	170 Pounds
3048EL/C (corner)	180 Pounds

SPECIAL SERVICES

Special Carton Marking

With specially marked information N/C

Shipping

Ships **knocked down, FOB Bonduel, WI 54107, freight prepaid.** Freight class 125.

Specifications and prices are subject to change without prior notice.

Toggle® C-Leg Tables
Dual Motor Electric-Bases Only

Toggle® C-Leg Tables
Dual Motor Electric-Bases Only

	MODEL	A	MODEL NUMBER Basic Model	MODEL NUMBER Base Finish	Approx. Packaged Weight	Delivered Pricing
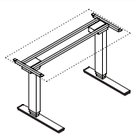 HRDPT	**Rectangular Dual Motor Electric-Base Only - 24"D** • For use with 24" deep surfaces, 48-72" wide • Adjusts from 26-52" including 1-1/4" top • Top (not included) should be undersized .25-.75" to allow safe clearance in any work area • Maximum operating load is 264 lbs (including weight of top) • 3-Stage base	24"	TGBO.EC24	□□	85.0#	$ 2016
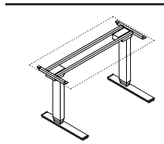 HRDPT	**Rectangular Dual Motor Electric-Base Only - 30"D** • For use with 30 and 36" deep surfaces, 48-72" wide • Adjusts from 26-52" including 1-1/4" top • Top (not included) should be undersized .25-.75" to allow safe clearance in any work area • Maximum operating load is 264 lbs (including weight of top) • 3-Stage base	30"	TGBO.EC30	□□	90.0#	$ 2092
			Ⓐ	Ⓑ		

HOW TO ORDER

Indicate the following information on order form:
1. Quantity of each item.
2. Model number, including options. See "How To Build a Model Number".
3. Any special service required.

Note: • The □ indicates that a choice is required.
• The absence of the □ indicates that no choice is required.
• Alpha-numeric characters in place of □ indicate that no other alternatives are available.

HOW TO BUILD A MODEL NUMBER

Ⓐ Select basic model.

Ⓑ Select base finish.
Refer to the **Product Color Options** page in this price list.

SPECIAL SERVICES

Special Carton Marking

With specially marked information N/C

Shipping

Ships **knocked down, FOB Bonduel, WI 54107, freight prepaid.** Freight class 125.

Specifications and prices are subject to change without prior notice.

Toggle® Square Shoe Tables

Triple Motor Electric Base

Toggle® Square Shoe Tables
Triple Motor Electric Base

	MODEL	A x B x C	MODEL NUMBER Basic Model	Edge Style	Modesty Panel	Edge Color	Surface Finish	Base Finish	Polyester Modesty Panel Color	Approx. Packaged Weight	74P Edge (74P)	Knife Edge (KN)	Laminate Grade 2 add to list price	Laminate Grade 3 add to list price
TGSS	**Square Shoe Triple Motor Electric Base Tables (Left) - 24"D** • 26-52" Electrically adjustable • Simple up/down switch • Maximum operating load varies (see chart below) • 3-Stage base • Includes two modesty panel appropriately sized for each non-user side of the table when specified	24 x 60 x 48"	TOGLSS246048	□□□	□□□	□□□		□□	□□□□	192.0#	$ 2656	$ 2743	$ 50	$ 350
		24 x 66 x 48"	TOGLSS246648	□□□	□□□	□□□		□□	□□□□	197.0#	2743	2841	50	350
		24 x 72 x 48"	TOGLSS247248	□□□	□□□	□□□		□□	□□□□	202.0#	2779	2903	50	350
		24 x 84 x 48"	TOGLSS248448	□□□	□□□	□□□		□□	□□□□	211.0#	3126	3273	70	450
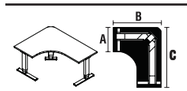 TGSS	**Square Shoe Triple Motor Electric Base Tables (Right) - 24"D** • 26-52" Electrically adjustable • Simple up/down switch • Maximum operating load varies (see chart below) • 3-Stage base • Includes two modesty panel appropriately sized for each non-user side of the table when specified	24 x 48 x 60"	TOGLSS244860	□□□	□□□	□□□		□□	□□□□	192.0#	$ 2656	$ 2743	$ 50	$ 350
		24 x 48 x 66"	TOGLSS244866	□□□	□□□	□□□		□□	□□□□	197.0#	2743	2841	50	350
		24 x 48 x 72"	TOGLSS244872	□□□	□□□	□□□		□□	□□□□	202.0#	2779	2903	50	350
		24 x 48 x 84"	TOGLSS244884	□□□	□□□	□□□		□□	□□□□	211.0#	3126	3273	70	450
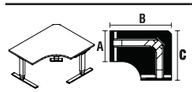 TGSS	**Square Shoe Triple Motor Electric Base Tables (Left) - 30"D** • 26-52" Electrically adjustable • Simple up/down switch • Maximum operating load varies (see chart below) • 3-Stage base • Includes two modesty panel appropriately sized for each non-user side of the table when specified	30 x 60 x 48"	TOGLSS306048	□□□	□□□	□□□		□□	□□□□	203.0#	$ 2681	$ 2768	$ 50	$ 350
		30 x 66 x 48"	TOGLSS306648	□□□	□□□	□□□		□□	□□□□	209.0#	2768	2866	50	350
		30 x 72 x 48"	TOGLSS307248	□□□	□□□	□□□		□□	□□□□	215.0#	2804	2928	50	350
		30 x 84 x 48"	TOGLSS308448	□□□	□□□	□□□		□□	□□□□	227.0#	3150	3298	70	450
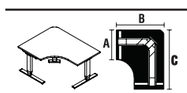 TGSS	**Square Shoe Triple Motor Electric Base Tables (Right) - 30"D** • 26-52" Electrically adjustable • Simple up/down switch • Maximum operating load varies (see chart below) • 3-Stage base • Includes two modesty panel appropriately sized for each non-user side of the table when specified	30 x 48 x 60"	TOGLSS304860	□□□	□□□	□□□		□□	□□□□	203.0#	$ 2681	$ 2768	$ 50	$ 350
		30 x 48 x 66"	TOGLSS304866	□□□	□□□	□□□		□□	□□□□	209.0#	2768	2866	50	350
		30 x 48 x 72"	TOGLSS304872	□□□	□□□	□□□		□□	□□□□	215.0#	2804	2928	50	350
		30 x 48 x 84"	TOGLSS304884	□□□	□□□	□□□		□□	□□□□	227.0#	3150	3298	70	450
				Ⓐ	Ⓑ	Ⓒ	Ⓓ	Ⓔ	Ⓕ	Ⓖ				

HOW TO ORDER

Indicate the following information on order form:
1. Quantity of each item.
2. Model number, including options. See "How To Build a Model Number".
3. Any special service required.

Note: • The □ indicates that a choice is required.
- The absence of the □ indicates that no choice is required.
- Alpha-numeric characters in place of □ indicate that no other alternatives are available.

HOW TO BUILD A MODEL NUMBER

Ⓐ Select basic model.

Ⓑ Select edge style.

74P	- 74P edge
KN	- Knife edge

Knife edge (KN) on user side only

Ⓒ Select modesty panel.

NMP	- No modesty panel
PMP	- Polyester felt modesty panel

Ⓓ Select edge color.
Refer to the **Product Color Options** page in this price list.
Edge color offerings are based on edge style selections.

Ⓔ Select surface finish.
Refer to the **Product Color Options** page in this price list.
Surface finish offerings are based on edge style selections.

Ⓕ Select base finish.
Refer to the **Product Color Options** page in this price list.

Ⓖ Select modesty panel color (only if polyester felt panel is chosen).
Refer to the **Product Color Options** page in this price list.

INFORMATION

MAXIMUM OPERATING LOAD

Model Size	Maximum Operating Load
246048	260 Pounds
246648	255 Pounds
247248	250 Pounds
248448	240 Pounds
244860	260 Pound
244866	255 Pounds
244872	250 Pounds
244884	240 Pounds
306048	250 Pounds
306648	245 Pounds
307248	235 Pounds
308448	225 Pounds
304860	250 Pound
304866	245 Pounds
304872	235 Pounds
304884	225 Pounds
TGBO.3EL.24	330 Pounds
TGBO.3EL.30	330 Pounds

SPECIAL SERVICES

Special Carton Marking

With specially marked information N/C

Shipping

Ships **knocked down, FOB Bonduel, WI 54107, freight prepaid.** Freight class 125.

Specifications and prices are subject to change without prior notice.

Toggle® Square Shoe Tables

Triple Motor Electric-Bases Only

Toggle® Square Shoe Tables
Triple Motor Electric-Bases Only

	MODEL	A	MODEL NUMBER Basic Model	MODEL NUMBER Base Finish	Approx. Packaged Weight	Delivered Pricing
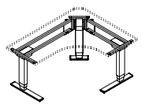 HRDPT	**Square Shoe Triple Motor Electric-Base Only - 24"D** • For use with 24" deep surfaces, one side 48" wide, other side 60-84" wide; frame supports left long or right long configuration • Adjusts from 26-52" including 1-1/4" top • Top (not included) should be undersized .25-.75" to allow safe clearance in any work area • Maximum operating load is 330 lbs (including weight of top) • 3-Stage base, 3-motor base	24"	TGBO.3EL24	□□	123.0#	$ 2298
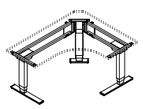 HRDPT	**Square Shoe Triple Motor Electric-Base Only - 30"D** • For use with 30" deep surfaces, one side 48" wide, other side 60-84" wide; frame supports left long or right long configuration • Adjusts from 26-52" including 1-1/4" top • Top (not included) should be undersized .25-.75" to allow safe clearance in any work area • Maximum operating load is 330 lbs (including weight of top) • 3-Stage base, 3-motor base	30"	TGBO.3EL30	□□	125.0#	$ 2323
			Ⓐ	Ⓑ		

HOW TO ORDER

Indicate the following information on order form:
1. Quantity of each item.
2. Model number, including options. See "How To Build a Model Number".
3. Any special service required.

Note: • The □ indicates that a choice is required.
• The absence of the □ indicates that no choice is required.
• Alpha-numeric characters in place of □ indicate that no other alternatives are available.

HOW TO BUILD A MODEL NUMBER

Ⓐ Select basic model.

Ⓑ Select base finish.
Refer to the **Product Color Options** page in this price list.

INFORMATION

MAXIMUM OPERATING LOAD

Model Size	Maximum Operating Load
246048	260 Pounds
246648	255 Pounds
247248	250 Pounds
248448	240 Pounds
244860	260 Pound
244866	255 Pounds
244872	250 Pounds
244884	240 Pounds
306048	250 Pounds
306648	245 Pounds
307248	235 Pounds
308448	225 Pounds
304860	250 Pound
304866	245 Pounds
304872	235 Pounds
304884	225 Pounds
TGBO.3EL.24	330 Pounds
TGBO.3EL.30	330 Pounds

SPECIAL SERVICES

Special Carton Marking

With specially marked information N/C

Shipping

Ships **knocked down, FOB Bonduel, WI 54107, freight prepaid.** Freight class 125.

Specifications and prices are subject to change without prior notice.

Toggle® Tables
Accessories

	MODEL	MODEL NUMBER Basic Model	Approx. Packaged Weight	Delivered Pricing
 HRDPT	**Deluxe Switch with Presets** • Includes digital display and 4 preset button • Must be ordered separately	47.2328.HNDDX	1.0#	$ 117
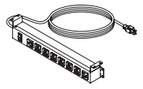 HRDPT	**Undermount R8 Module** • Silver in color • Includes 8-15A, 120 VAC receptacles, 2 outer most rotated 90 degrees to accommodate large plugs • 144” power cord • Under table mount attaches with 4 screws (included) • Module hangs down from surface 1” to allow easier access to plug in/unplug • Inlcudes 4 wire management clips • ETL listed for US and Canada • Dimensions are 16.3” x 2.3” x 2.8”	14.1450.SLVR	3.0#	$ 302
 HRDPT	**Vertical Cable Manager** • Silver in color • Multi-directional manager holds wires in static and adjustable tables • Weighted base keeps manager in positon • Includes magnetic link to easily attach to table leg • Attaches to underside of table with or without wire management trough • Includes 63 links, 1-3 link magnetic piece, 1 top connector, 2 screws, 1 base plate	47.2320.SLVR	1.0#	$ 112

Ⓐ

HOW TO ORDER

Indicate the following information on order form:
1. Quantity of each item.
2. Model number, including options. See “How To Build a Model Number”.
3. Any special service required.

Note: • The ☐ indicates that a choice is required.
- The absence of the ☐ indicates that no choice is required.
- Alpha-numeric characters in place of ☐ indicate that no other alternatives are available.

HOW TO BUILD A MODEL NUMBER

Ⓐ Select basic model.

SPECIAL SERVICES

Special Carton Marking

With specially marked information N/C

Shipping

Ships **knocked down, FOB Bonduel, WI 54107, freight prepaid.** Freight class 125.

Specifications and prices are subject to change without prior notice.

Toggle® Tables
Accessories

	MODEL	MODEL NUMBER Basic Model	Approx. Packaged Weight	Delivered Pricing
 HRDPT	**Caster Kit - 2-Leg Table** • Includes mounting plates and 16 thread cutting screws to mount on the underside of the feet • 2 locking and 2 non-locking black casters • Must be ordered separately	TGCA	1.0#	$ 76
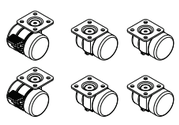 HRDPT	**Caster Kit - 3-Leg (Square Shoe) Table** • Includes mounting plates and 24 thread cutting screws to mount on the underside of the feet • 2 locking and 4 non-locking black casters • Must be ordered separately	TGCA.3LEG	1.0#	$ 114
		Ⓐ		

HOW TO ORDER

Indicate the following information on order form:
1. Quantity of each item.
2. Model number, including options. See “How To Build a Model Number”.
3. Any special service required.

Note: • The ☐ indicates that a choice is required.
• The absence of the ☐ indicates that no choice is required.
• Alpha-numeric characters in place of ☐ indicate that no other alternatives are available.

HOW TO BUILD A MODEL NUMBER

Ⓐ Select basic model.

SPECIAL SERVICES

Special Carton Marking

With specially marked information N/C

Shipping

Ships **knocked down, FOB Bonduel, WI 54107, freight prepaid.** Freight class 125.

Specifications and prices are subject to change without prior notice.

Toggle® Tables
Accessories

	MODEL	L	MODEL NUMBER Basic Model	MODEL NUMBER Paint Color	Approx. Packaged Weight	Delivered Pricing
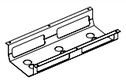 HRDPT	**Wire Trough** • Keeps wires enclosed and tidy • Open design makes it easy to feed cables through trough • Steel construction • Intended for installation into pre-drilled pilot holes • Mounting hardware included • 9-1/2" wide x 4-1/4" high x 24" long • One kit for 48" rectangle or 48" side of square shoe tables	24"	TG.TROUGH.48	□□	5.0#	$ 92
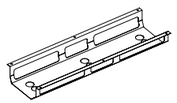 HRDPT	**Wire Trough** • Keeps wires enclosed and tidy • Open design makes it easy to feed cables through trough • Steel construction • Intended for installation into pre-drilled pilot holes • Mounting hardware included • 9-1/2" wide x 4-1/4" high x 36" long • One kit for 60" rectangle and corner or 60-66" side of square shoe tables	36"	TG.TROUGH.60	□□	7.0#	$ 112
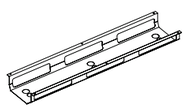 HRDPT	**Wire Trough** • Keeps wires enclosed and tidy • Open design makes it easy to feed cables through trough • Steel construction • Intended for installation into pre-drilled pilot holes • Mounting hardware included • 9-1/2" wide x 4-1/4" high x 48" long • One kit for 72" rectangle or 72-84" side of square shoe tables	48"	TG.TROUGH.72	□□	10.0#	$ 131
			Ⓐ	Ⓑ		

HOW TO ORDER

Indicate the following information on order form:
1. Quantity of each item.
2. Model number, including options. See "How To Build a Model Number".
3. Any special service required.

Note: • The □ indicates that a choice is required.
- The absence of the □ indicates that no choice is required.
- Alpha-numeric characters in place of □ indicate that no other alternatives are available.

HOW TO BUILD A MODEL NUMBER

Ⓐ Select basic model.

Ⓑ Select paint color.
Refer to the **Product Color Options** page in this price list.

SPECIAL SERVICES

Special Carton Marking

With specially marked information	N/C

Shipping

Ships **knocked down, FOB Bonduel, WI 54107, freight prepaid.** Freight class 125.

Specifications and prices are subject to change without prior notice.

1330 BELLEVUE STREET
GREEN BAY, WI 54302
800.424.2432 / KI.COM
KI is a trusted expert for furniture and wall systems around the globe.
USA | CANADA | MEXICO | UK | EUROPE | ASIA | MIDDLE EAST
© 2025 Krueger International, Inc. All Rights Reserved.