Parts Diagram

Cheevo® Esports Chair

June 2024

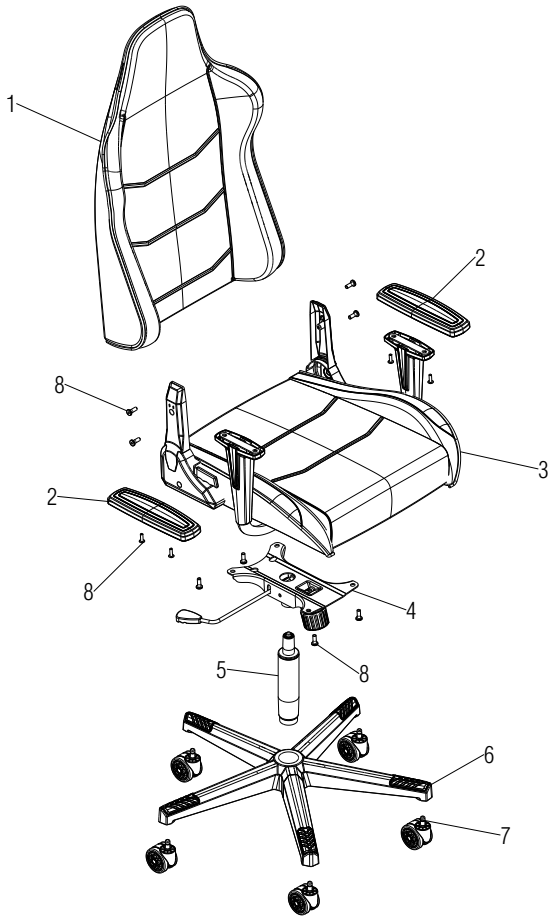

.XX = Select Color (BL = Black or GR = Grey)
Item 8 includes all chair hardware and Allen wrench.

Item	Part Number	Item Description	Req Qty
1	51.3107.XX	Backrest Assembly, Cheevo	1
2	51.3104	Arm Cap, Cheevo	1
3	Contact KI	Seat Assembly, Cheevo	1
4	51.3102	Seat Support Mechanism, Cheevo	1
5	51.3103	Pneumatic Cylinder, Cheevo	1
6	51.3101	5-Blade Base, Cheevo	1
7	51.3106	Caster Kit, Cheevo (includes five casters)	1
8	51.3105	Hardware Kit, Cheevo (see note)	1

KI · 1330 Bellevue Street · Green Bay, WI 54302 · 1-800-424-2432 · www.ki.com

©2024 Krueger International, Inc. All Rights Reserved