MEM Bath spout for wall mounting - Chrome

13 801 782 Product version from 3/10/2014

- 220mm projection
- rectangular, air-enriched flow
- rosette 60 x 60 mm
- hole diameter 37 mm
- 1/2" connection
- max. flow 38.5 l/min at 3 bar flow pressure
- WRAS

Chrome	13 801 782-00
Brushed Platinum	13 801 782-06
Platinum	13 801 782-08
Dark Chrome	13 801 782-19
Brushed Durabrass (23kt Gold)	13 801 782-28
Brushed Dark Brass	13 801 782-39
Brushed Champagne (22kt Gold)	13 801 782-46
Champagne (22kt Gold)	13 801 782-47
Brushed Dark Platinum	13 801 782-99

Recommended miscellaneous

Concealed wall elbow - 35 085 970 90
●max. recess depth 163 mm
●min. recess depth 90 mm

MEM Bath spout for wall mounting - Chrome

13 801 782 Product version from 3/10/2014

mm [inches]

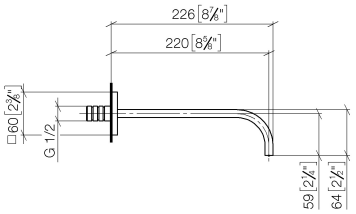

Flow rate chart

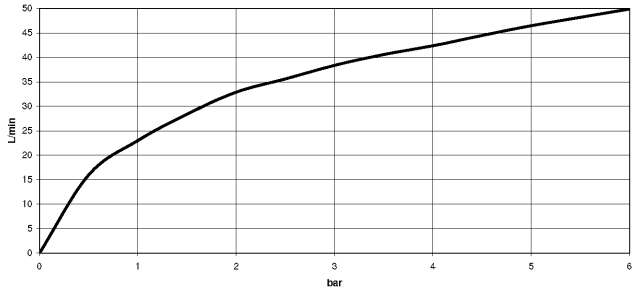

Codes & Standards

ASME A112.18.1	cUPC	Scottish Water Byelaws	UK Water Supply Regulations

13 801 782 Product version from 3/10/2014

Certificates and sustainability

WRAS_2203 IAPMO_4976

MEM Bath spout for wall mounting - Chrome

13 801 782 Product version from 3/10/2014

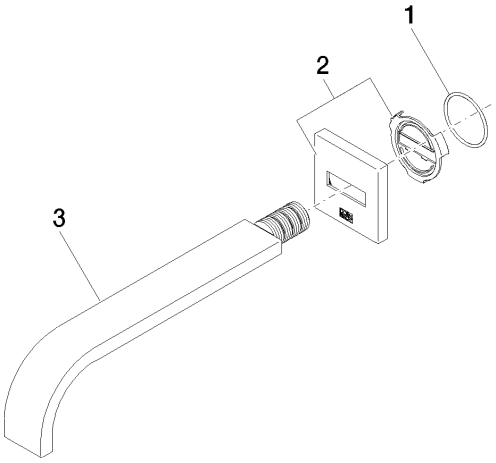

Spare parts list

No.	Item Number	Name	Quantity used	Delivery time
3	04 28 22 290 00-00	spout	1.00	10
2	90 27 78 035 00-00	rosette	1.00	10
1	09 14 10 111 90	seal	1.00	2

We reserve the right to change designs, product range and technical specifications without prior notice.
More information can be found at: www.dornbracht.com +49 (0) 2371 8899 900 mail@dornbracht.com