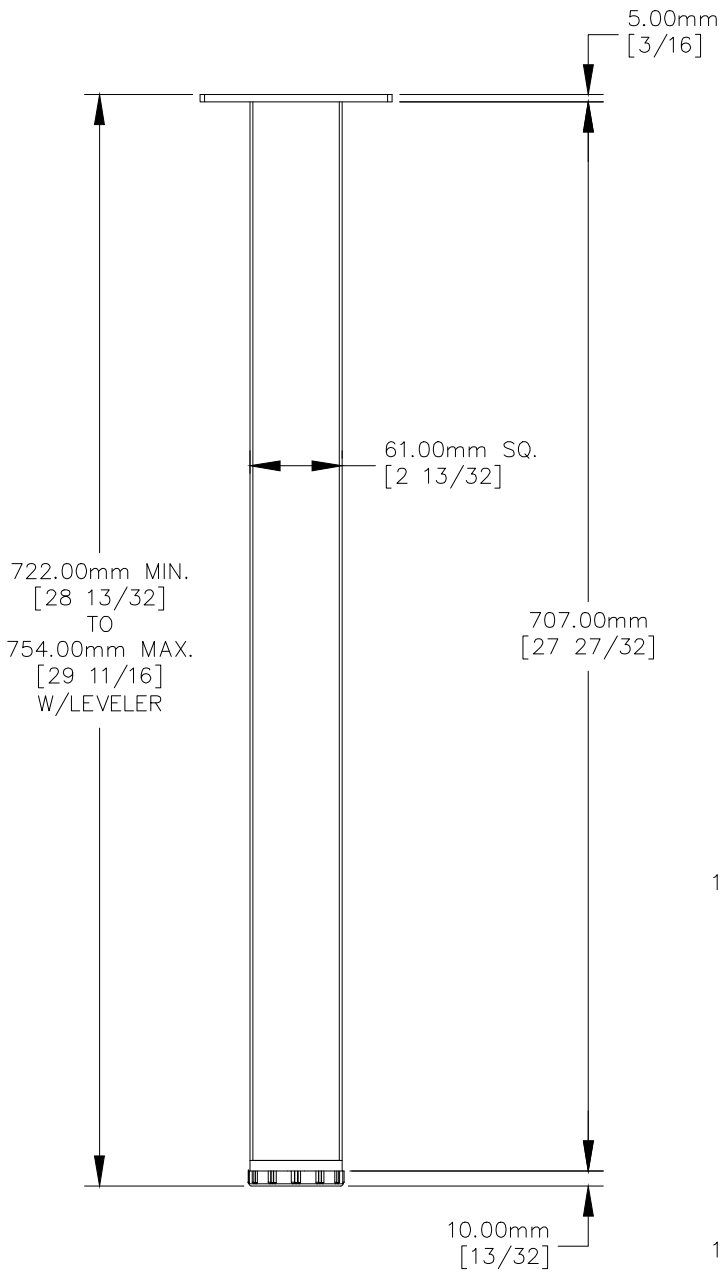

FRONT VIEW

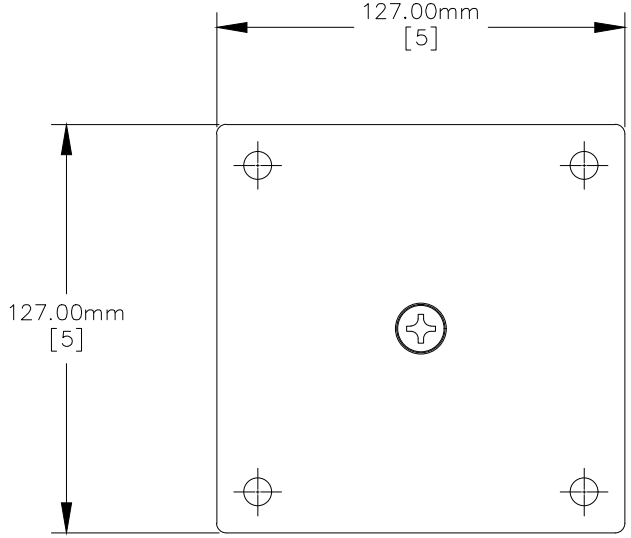

TOP VIEW

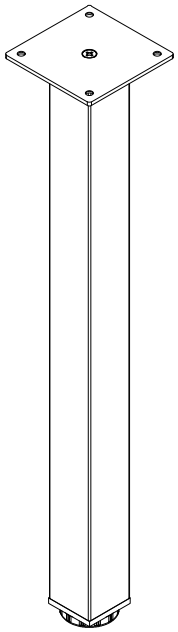

NOTE:

1. Weight capacity is 200 lbs. per leg.
2. Table thickness is 1 MIN.
3. Table width is 36 MAX.
4. Table length is 72 MAX.

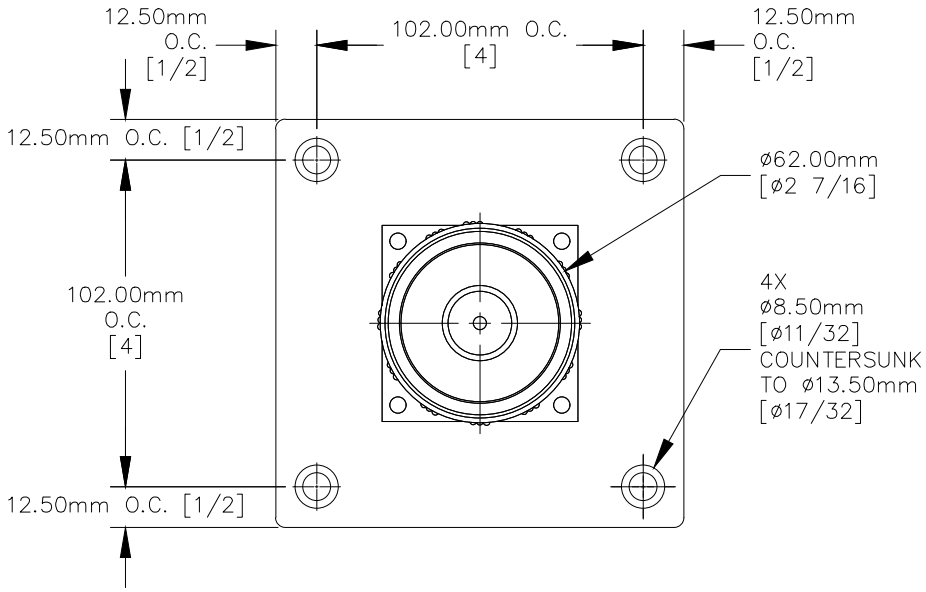

BOTTOM VIEW

MOCKETT
DOUG MOCKETT & COMPANY, INC
P.O. BOX 3333
MANHATTAN BEACH, CA 90266 USA
PHONE: 310.318.2491 FAX: 310.376.7650
email: info@mockett.com www.mockett.com

PROPRIETARY AND CONFIDENTIAL.
ALL DIMENSIONS HAVE A +/- 1/32" TOLERANCE UNLESS OTHERWISE SPECIFIED. WE DO NOT RECOMMEND DRILLING OR CUTTING ANY HOLES BEFORE RECEIVING A PRODUCT OR A PRODUCT SAMPLE.

PART NAME:		DRAWN BY:	LAST EDITED:	REQUESTED BY:	SHEET:
TL77/TP		BP	-	FM	1 OF 1
SCALE: N.T.S.	TOLERANCE: ± 1 / 16 "	DATE: 2022.07.19	DATE: 0000.00.00 12:00am	APPROVED BY: -	