*Image depicts an older version of the Air³ fan

Air³ Collection

Flexible, freestanding rooms

Launched in 2014, Orangebox's award-winning AIR³ acoustic pod range can act as a freestanding meeting room, private space, phone booth or touchdown room. The AIR³ combines new materials with a wider range of finishes and the most advanced room system on the market, all of which helps make it the world's most complete pod system.

AIR³ has been designed as a scalable system, able to work globally. Its internationally patented opening roof system features an advanced fire safety system developed specifically for sprinklered office and other environments.

Interchangeable panels allow you to refresh your AIR³ at will, swapping, changing and refreshing colours and fabrics to make it unique. Its combination of high quality glass and soft acoustic panelling delivers both a refined aesthetic and a high level of insulation and speech privacy.

Like all Orangebox pods, AIR³ is demountable – so it can be moved, re-positioned or re-used to suit changing needs. Our range of AIR³ pods offer a pleasing variety of square, small and large private meeting spaces.

Image Grand Rapids – Style OBAIR23

*Image depicts an older version of the Air³ fan

Air23

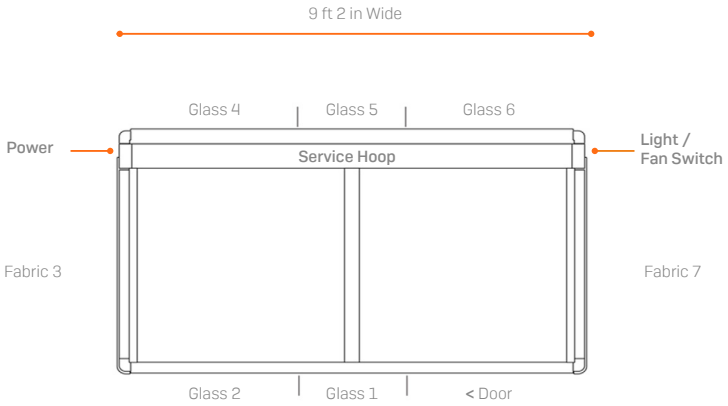

0B1AIR23
Half square opening roof

Air25

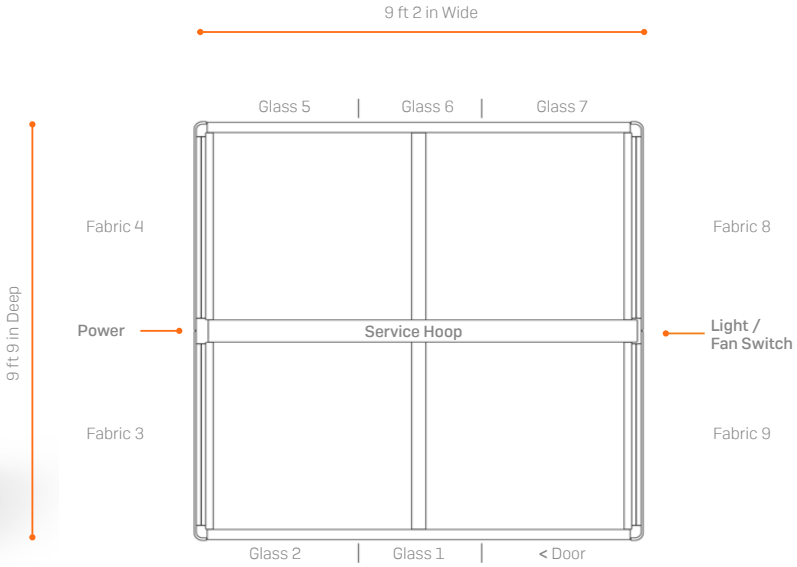

0B1AIR25
Square opening roof

Air27

0B1AIR27
Rectangle opening roof

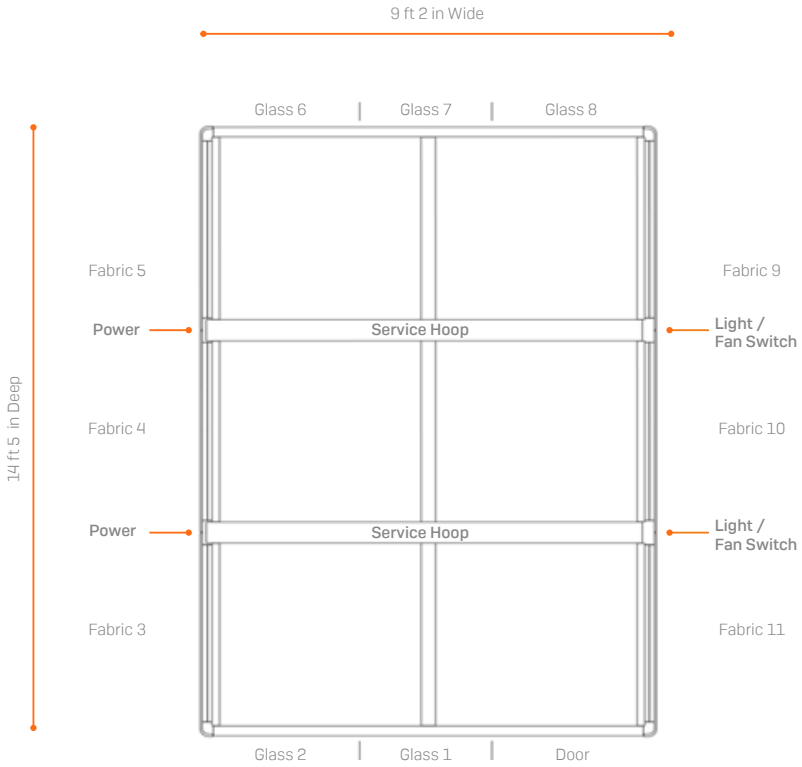

Product Range

OB1AIR23
Half square opening roof

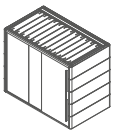

H89"
W110" D66"

OB1AIR25
Square opening roof

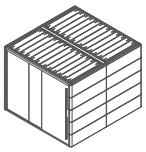

H89"
W110" D117"

OB1AIR27
Rectangle opening roof

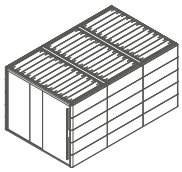

H89"
W110" D173"

Integrated Table

OB1AIR30
Small table

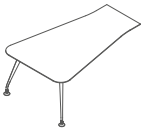

H29"
W45" D69"

OB1AIR35
Short small table

H29"
W101" D24"

H - Height — W - Width — D - Depth

Product Description

Standard Product Description

Upholstered Internal & External Panels:
Fabric Price Group 1

Glass:
Clear Glass

Service Hoop:
Contains all electrical services, including 3 power outlets, data ports, lighting, ventilation, a fire fail-safe roof system, and a user control panel.

Optional Upcharges

Upholstered Internal & External Panels:
Fabric Price Group 2-10

Monitor Bracket:
Hoop-mounted fixed monitor bracket (exception, not offered for Air23)
Over-upholstery fixed monitor bracket

Whiteboards:
Straight glass magnetic whiteboard

Door Options:
Door lock
Ontario, Canada-compliant door

Fixtures:
Seismic kit

Optional Integrated Tables

Standard Table Finishes

Table Top, 1" with a tapered edge:
High-Pressure Laminate (HPL) Group 1

Table Leg Finish:
Black, silver

Upcharge Table Finishes

Table Top 1" with a tapered edge:
High-Pressure Laminate (HPL) Groups 2, 3
Open Line Laminate (OLL)

Table Leg Finish:
Polished chrome

Product Finishes

See here for the complete list of the Orangebox Fabric Matrix.

See here for the Surface Material Guide.

Table Finishes

Edge Details

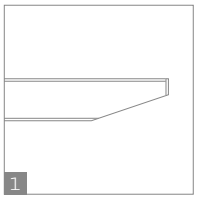

1. Tapered Edge

Image Grand Rapids – Style OBAIR23

*Image depicts an older version of the Air³ fan

Roof

AIR³ can be positioned anywhere within a building as long as there is a power / data connection point. The roof is specifically designed to enable AIR³ to conform to fire standards, creating an "open grid" for sprinkler coverage to the inside of the space in accordance with local codes and compliance.

Opening Roof - Pod Heights

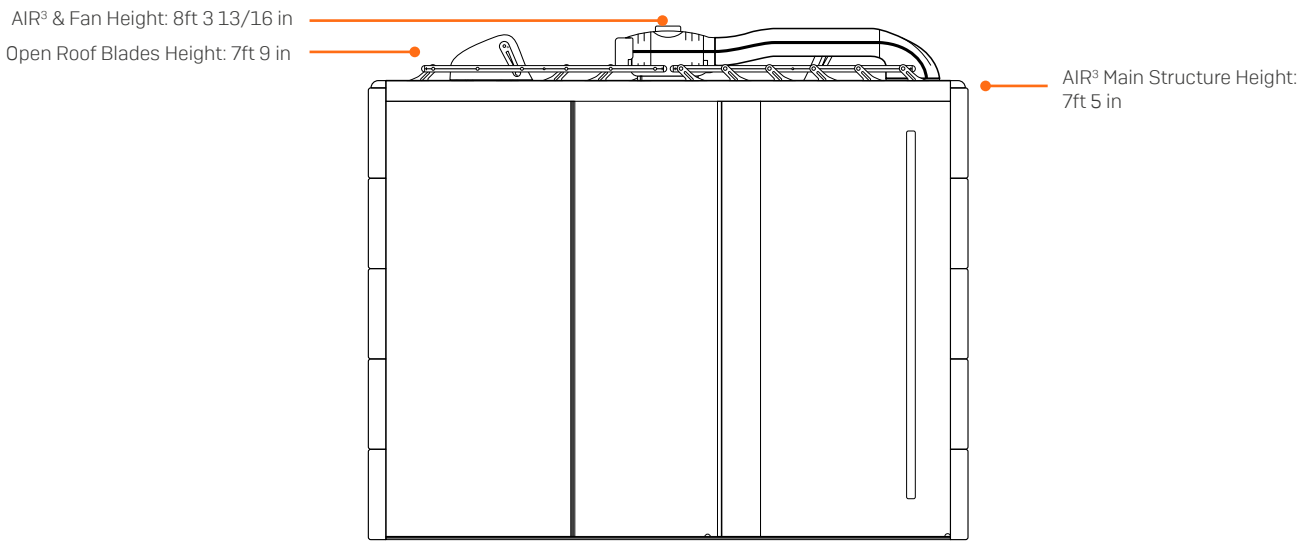

Opening Roof - In the event of a fire

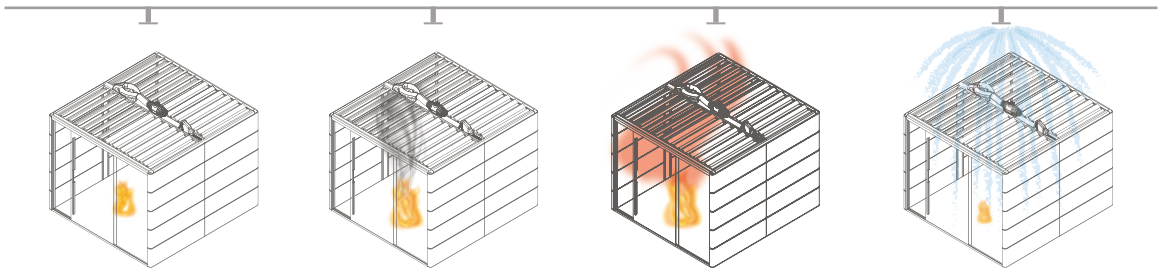

Stage 1
If a fire starts in the pod it will be detected by the heat detector.

Stage 2
Detector cuts power & spring loaded actuators opens roof.

Stage 3
Heat escapes through the open roof & buildings sprinklers activate.

Stage 4
Water ingress into pods through roof.

Integrated Services

At the heart of the Air3 pods is the hoop, which contains all the intelligence and technology features of the pod. The lighting, ventilation and opening roof are all integrated within the hoop and automatically activated through a PIR motion sensor.

The user control panel is a flush membrane switch panel with LED indicators.

Electric Control Panel

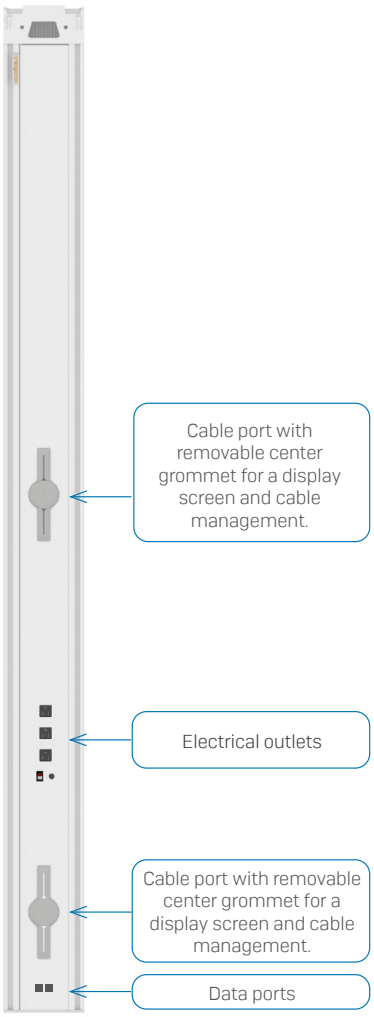

User Control Panel

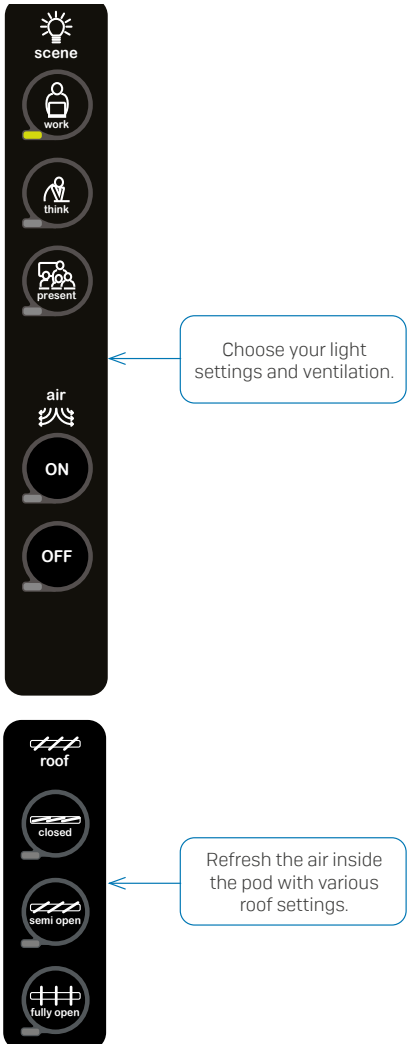

Standard Features

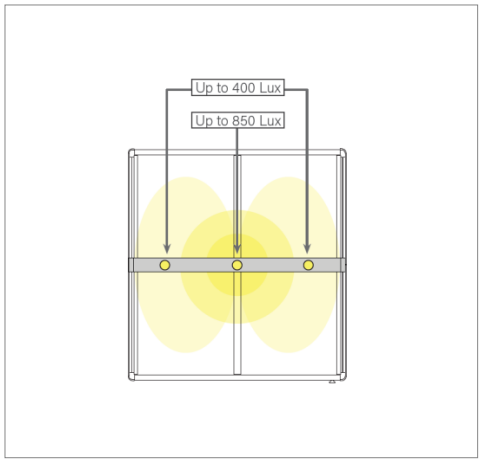

LED Lighting System

Integrated into the main Hoop of the pod, our lighting system uses efficient LED bulbs to deliver high output, low energy consumption lighting that's maintenance-free.

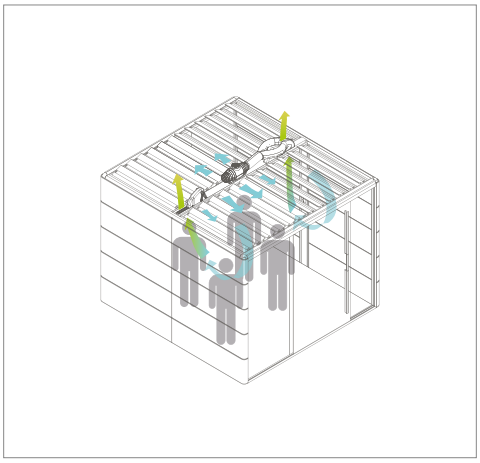

AIR³ Circulation Fan

Integrated into the main Hoop of the pod, our air circulation fan uses the building's existing HVAC system bringing maximum air into the pod through the open roof blades.

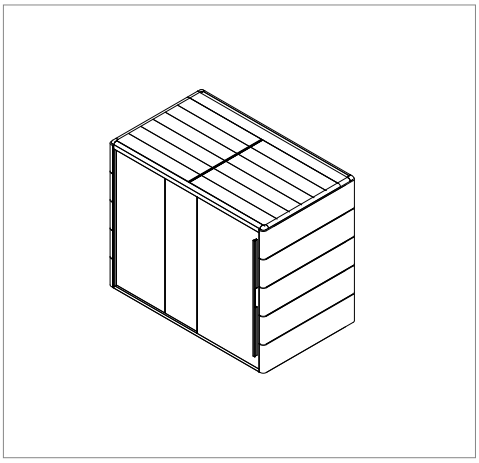

Doors

Sliding glass doors can be fitted to open right to left or left to right at the time of installation.

Accessories

Whiteboards, monitor brackets and seismic brackets can be directly integrated into the AIR3 (superscript 3) pods.

Glass Magnetic Whiteboards

Whiteboards can be positioned on layers 3 & 4 upholstery panels, internal only.

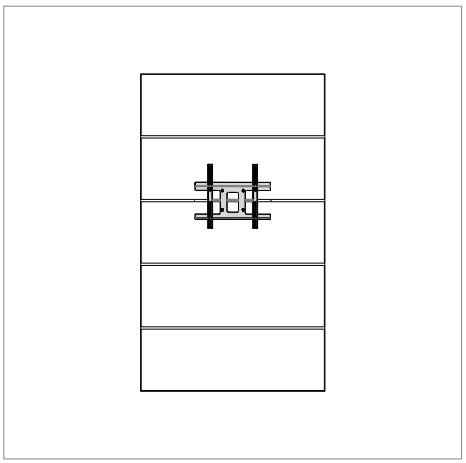

Over Upholstery Fixed Monitor Bracket

Brackets fit best with straight screened monitors with a maximum weight of 55 lbs, 32-55"

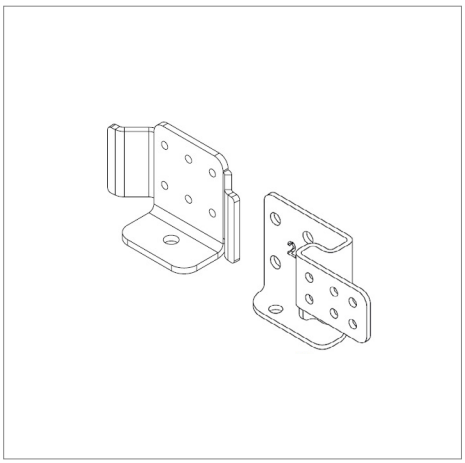

Seismic Bracket

The seismic brackets are used to anchor the AIR³ safely in your chosen position.

Upholstery

AIR³ can be customized with a range of fabric choices on upholstered panels.

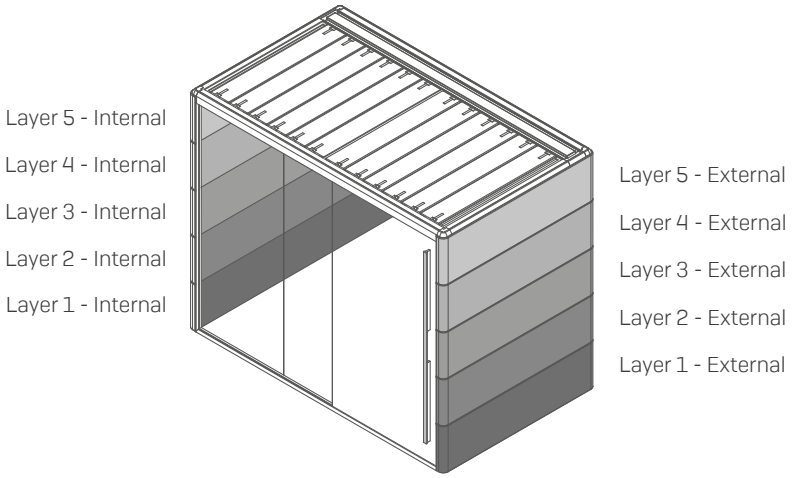

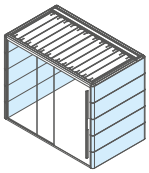

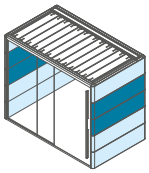

Color Options

Each panel layer, internal and external, can be personalized with different fabric types or colors.

Single Color

A single color for the entire pod or different singular colors for internal panels vs external panels.

Layers

Utilize layers to create unique combinations of colors and fabrics.

*Image depicts an older version of the Air³ fan

Contact

us.support@orangebox.com

SMR #23-00000001010T ©2024 Orangebox. All rights reserved. All specifications are subject to change without notice. Trademarks used herein are the property of Orangebox or their respective owners. Printed in the U.S.A.