Riverby® | K-35004

HDPE cutting board

Features

- Fits securely within the sink bevel of Riverby® kitchen sinks
- 16-7/8" x 8-3/4" x 1" (429 x 222 x 25 mm)
- Large size provides a convenient food prep station
- Dishwasher-safe
- Silicone feet secure cutting board to countertop



1-800-4KOHLER (1-800-456-4537)
Kohler Co. reserves the right to make revisions without notice to product specifications.
For the most current specification sheet, go to www.kohler.com USA or www.kohler.ca Canada.
5-12-2026 20:28 - US-CA

Codes/Standards

None Applicable

Material

- HDPE

Warranty

See website for detailed warranty information.

KOHLER® One-Year Limited Warranty

1-800-4KOHLER (1-800-456-4537)
Kohler Co. reserves the right to make revisions without notice to product specifications.
For the most current specification sheet, go to www.kohler.com USA or www.kohler.ca Canada.
5-12-2026 20:28 - US-CA

THE BOLD LOOK OF KOHLER.

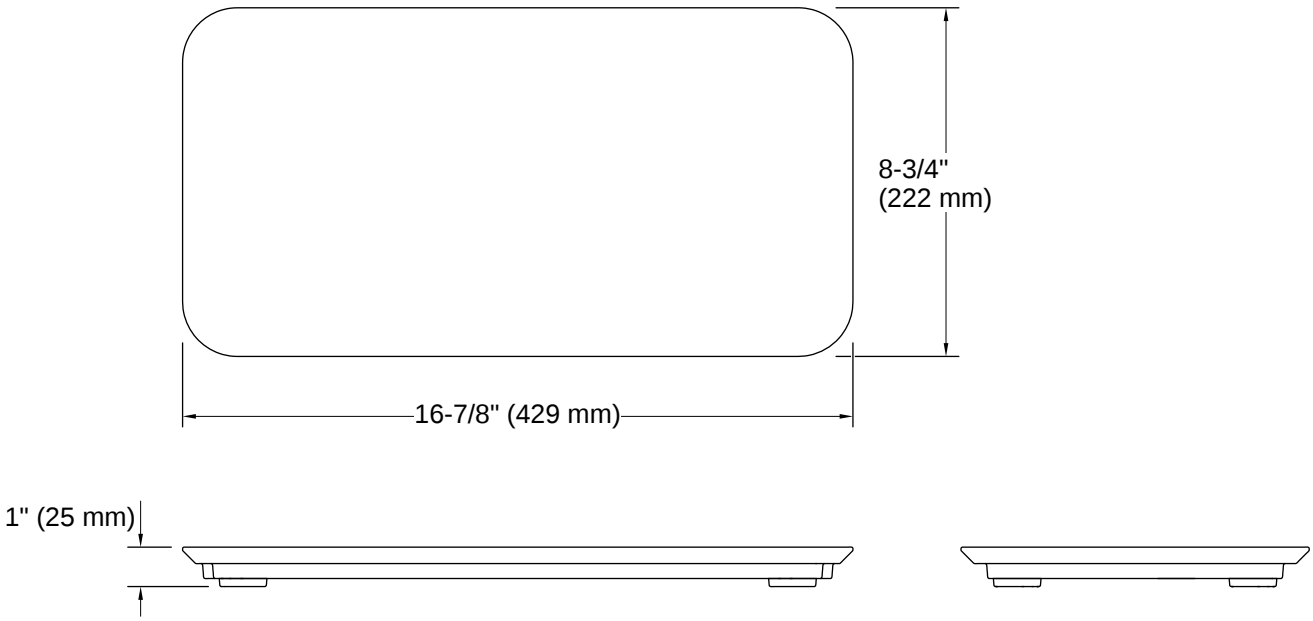

Installation Notes

Install this product according to the installation instructions.

1-800-4KOHLER (1-800-456-4537)
Kohler Co. reserves the right to make revisions without notice to product specifications.
For the most current specification sheet, go to www.kohler.com USA or www.kohler.ca Canada.
5-12-2026 20:28 - US-CA

THE BOLD LOOK OF KOHLER.