Stainless Steel 25" x 22" x 5 1/2" Drop-in Single Bowl Radiant Satin 18 Gauge ADA Sink
Model(s) MFD106

PRODUCT SPECIFICATIONS

Stainless Steel 25" x 22" x 5 1/2" Drop-in Single Bowl Radiant Satin 18 Gauge ADA Sink. Sink is manufactured from 18 gauge 304 Stainless Steel with a , Radiant Satin finish, Rear Center drain placement, and Full spray sides and bottom with Sides and Bottom pads.

Installation Type:	Drop-in
Material:	304 Stainless Steel
Finish:	, Radiant Satin
Gauge:	18
Sound Deadening:	Full spray sides and bottom with Sides and Bottom pads
Number of Bowls:	1
Sink Dimensions:	25" x 22" x 5-1/2"
Bowl 1 Dimensions:	22-1/2" x 16-3/4" x 5-1/2"
Drain Size:	3-1/2" (89mm)
Drain Location:	Rear Center
Minimum Cabinet Size:	30"
Cutout Template #:	1000001179

Template is available for download at elkay.com. CAD software will be required to open the template.

Cutout Dimensions for Drop-in Installation:
24-3/8" x 21-3/8" (619mm x 543mm) with 1/2" (12mm) corner radius

Hole Drilling Configurations:

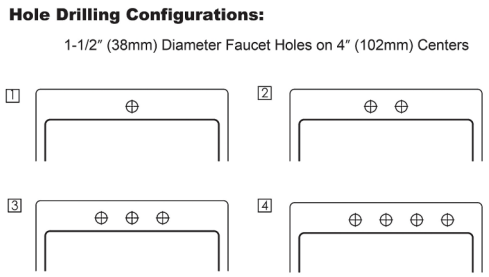



A Century of Tradition and Quality.
For more than 100 years, Elkay has been making innovative products and providing exceptional customer care. We take pride in offering plumbing products that make life easier, inspire change and leave the world a better place.

Product Compliance: ADA & ICC A117.1
ASME A112.19.3/CSA B45.4

Sinks are listed by IAPMO® as meeting the applicable requirements of the Uniform Plumbing Code®, International Plumbing Code®, and National Plumbing Code of Canada.

Complies with ADA & ICC A117.1 accessibility requirements when installed according to the requirements outlined in these standards.

Clean and Care Manual (PDF)
Installation Instructions (PDF) - 1000005236
Warranty (PDF)

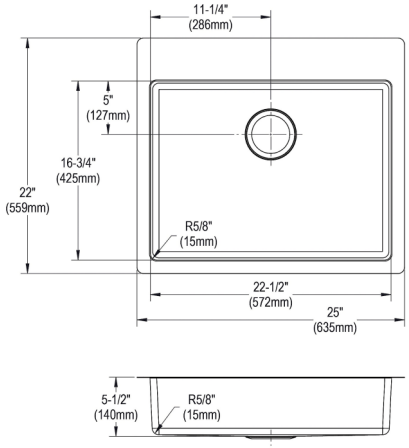

PART:_____QTY: _____
PROJECT:_____
CONTACT:_____
DATE:_____
NOTES:_____
APPROVAL:_____

In keeping with our policy of continuing product improvement, Elkay reserves the right to change product specifications without notice. Please visit elkay.com for the most current version of Elkay product specification sheets. This specification describes an Elkay product with design, quality, and functional benefits to the user. When making a comparison of other producers' offerings, be certain these features are not overlooked.

Installation Profile:

DROP-IN

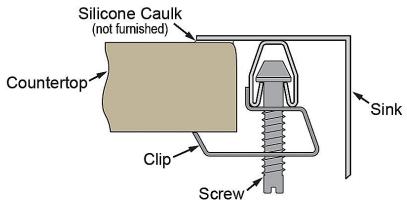

UNDERMOUNT - 1/8" OVERHANG

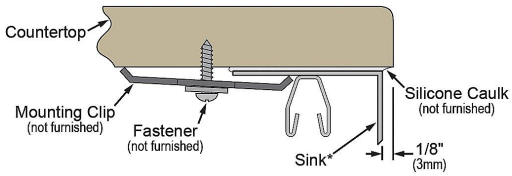

*Designed to affix to the underside of any solid surface countertop.

In keeping with our policy of continuing product improvement, Elkay reserves the right to change product specifications without notice. Please visit elkay.com for the most current version of Elkay product specification sheets. This specification describes an Elkay product with design, quality, and functional benefits to the user. When making a comparison of other producers' offerings, be certain these features are not overlooked.

© 2026