KOHLER®

Roughing-In

K-15582
CORALAIS®
LAVATORY FAUCET

Product Information

Applicable faucet:	
With flexible connections	K-15582-F
With ground joint connections	K-15582-P
Handle is ADA compliant.	**ADA**

Installation Notes

Install this product according to the installation guide.

Lower flow aerator options are available - please refer to the Kohler price book.
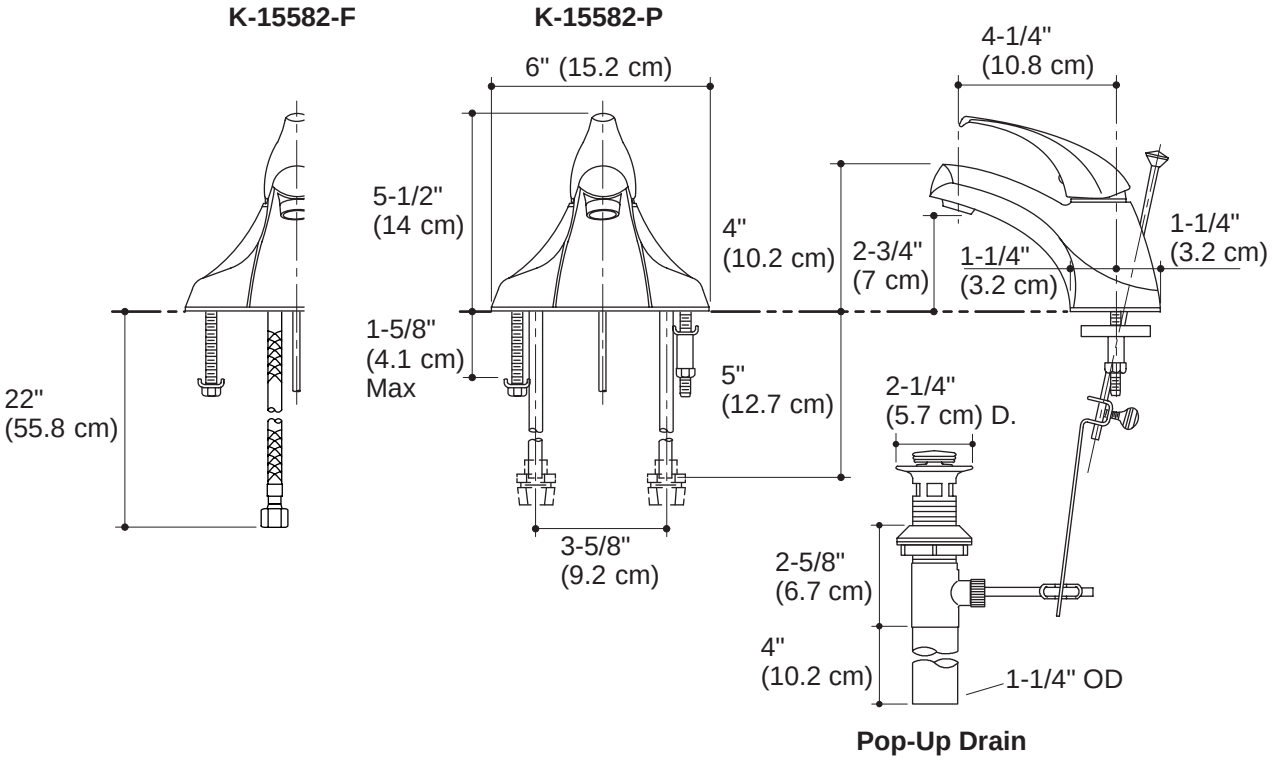
Fixture dimensions are nominal and conform to tolerances in ASME Standard A112.18.1.