KOHLER®

Roughing-In

K-3489
CIMARRON™
COMFORT HEIGHT™ TOILET

Product Information

Fixture:	
Configuration	1-piece, elongated
Water per flush	1.6 gallons (6 L) or 1.4 gallons (5.3 L)
Passageway	2-1/8″ (5.4 cm)
Water area	11-1/2″ (29.2 cm) x 8-1/2″ (21.6 cm)
Water depth from rim	6-1/8″ (15.5 cm)
Seat post hole centers	5-1/2″ (14 cm)
Fixture is ADA compliant.	**ADA**

Included Components:	
Seat	4636
Tank cover	1036367
Trip lever, left-hand	K-9466-L
Trip lever, right-hand	K-9466-R
Bolt cap accessory pack	1013092
Tank accessory pack	52265

Installation Notes

Install this product according to the installation guide.
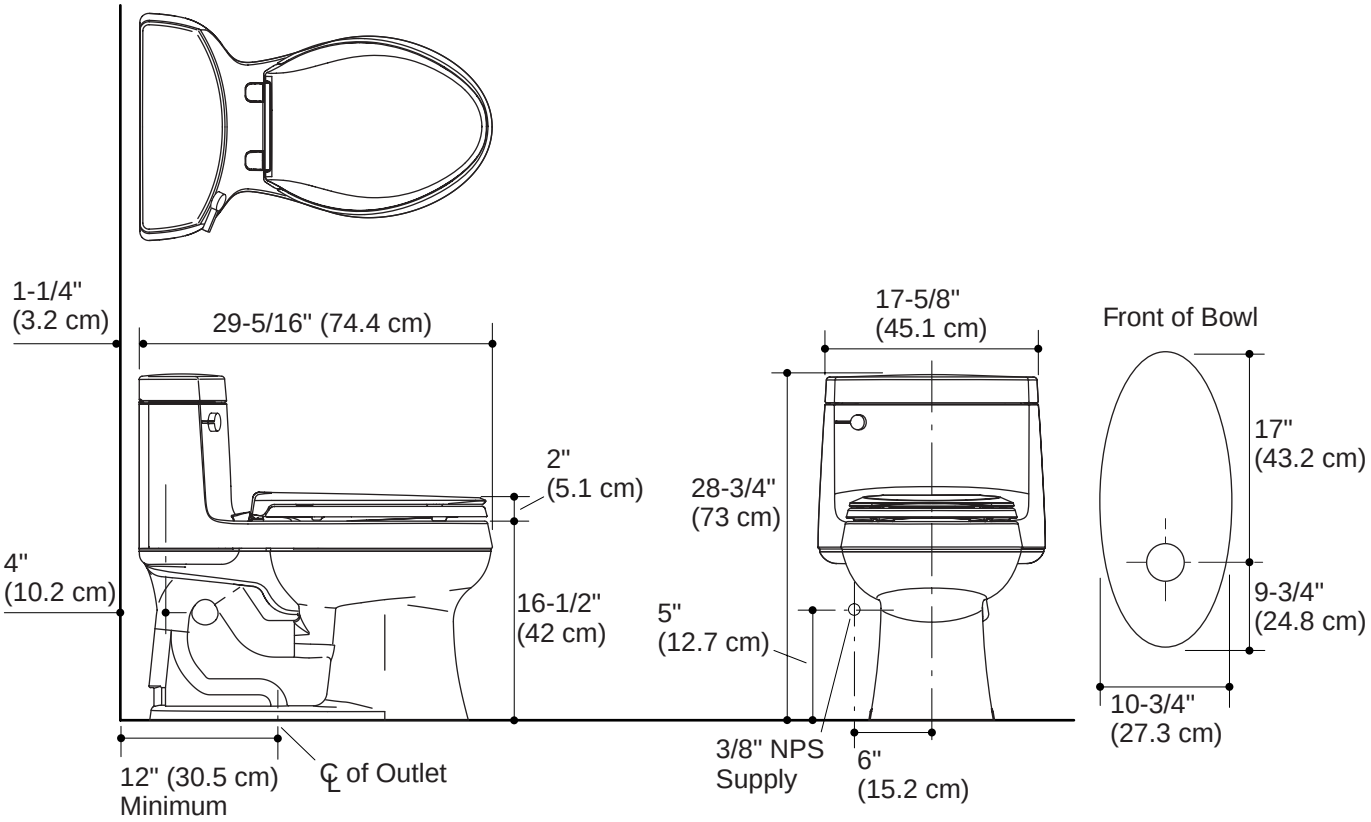
Fixture dimensions are nominal and conform to tolerances in ASME Standard A112.19.2.